Instrument Control Knobs

450-XX18 Series

Date Last Revised: 7/24/2005

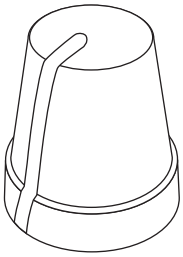

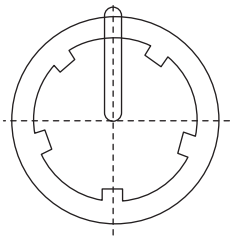

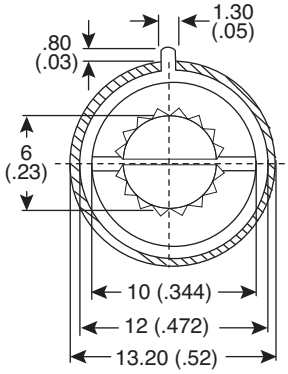

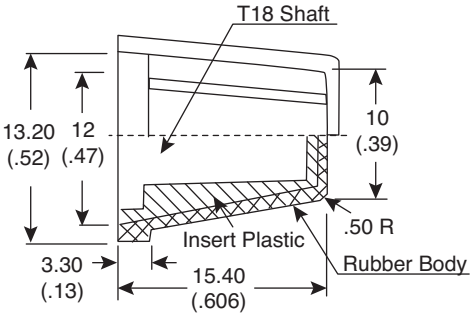

Dimensions: mm (In.)

SPECIFICATIONS

Part No.	Material	Body Color	Line Color	Shaft Hole
450-1518	Rubber body/plastic insert	Gray	Red	T18
450-2518	Rubber body/plastic insert	Gray	Yellow	T18
450-3518	Rubber body/plastic insert	Gray	Blue	T18
450-4518	Rubber body/plastic insert	Gray	Green	T18
450-6518	Rubber body/plastic insert	Gray	Black	T18
450-7518	Rubber body/plastic insert	Gray	Gray	T18
450-1C618	Rubber body/plastic insert	Black	Red	T18
450-2C618	Rubber body/plastic insert	Black	Yellow	T18
450-3C618	Rubber body/plastic insert	Black	Blue	T18
450-4C618	Rubber body/plastic insert	Black	Green	T18
450-5C618	Rubber body/plastic insert	Black	Gray	T18
450-7618	Rubber body/plastic insert	Black	White	T18

Available from Mouser Electronics
1-800-346-6873
www.mouser.com