DRAWING MADE IN THIRD ANGLE PROJECTION

1528047 1528047

/home/us016926/DMTECmod

PART NUMBER	REV	FIRST USED	TERMINATOR	FEED TYPE	DESCRIPTION
1528047-1	C	-	LEADMAKER	MECH POST FEED	CUTS CARRIER
1528047-2	C	-	BENCH	MECH PRE FEED	CUTS CARRIER
1528047-6	C	-	LEADMAKER	MECH POST FEED	CONTINUOUS CARRIER
7-1528047-1	C	-	LEADMAKER	MECH POST FEED	-1 AND SPARE PARTS
7-1528047-2	C	-	BENCH	MECH PRE FEED	-2 AND SPARE PARTS
7-1528047-6	C	-	LEADMAKER	MECH POST FEED	-6 AND SPARE PARTS
7-1528047-7	A	-	-	-	SPARE PARTS KIT

CRIMP DATA AMP TERMINAL AMP CRIMP SPECS

TERMINAL NAME: CONTACT, PIN MOD IV

CRIMP	SIZE	TYPE	RANGE
WIRE	1.07 [.042 IN]	F	26 - 22 AWG
INSUL	1.57 [.062 IN]	O	1.55 MAX [.061 MAX]

WIRE STRIP LENGTH 2.77-4.37 [.109-.172 IN] — APPL INSTRUCTION 408-8322 & 408-8490

TERMINAL APPL SPEC - 114-25016 - - — FEED 7.62 [.300 IN]

TERMINALS APPLIED

102095	-	-	-	-
166678	-	-	-	-
-	-	-	-	-
-	-	-	-	-
-	-	-	-	-
-	-	-	-	-
-	-	-	-	-
-	-	-	-	-

WIRE SIZE mm² AWG	CRIMP HEIGHT ✳	REF SETTING
22 AWG	0.91 ±0.05 [.036 ±.002 IN]	C 8
24 AWG	0.81 ±0.05 [.032 ±.002 IN]	D 5
26 AWG	0.76 ±0.05 [.030 ±.002 IN]	D 9
-	-	-
-	-	-
-	-	-
-	-	-
-	-	-
-	-	-
-	-	-
-	-	-
-	-	-
-	-	-
-	-	-
-	-	-

△1 RECOMMENDED SPARE PARTS.
2. GREASE RAM, CAM, CAM FOLLOWER AND FEED ROD LIGHTLY.
3. LUBRICATE DAILY PER THE APPLICATOR INSTRUCTION SHEET SUPPLIED WITH THE APPLICATOR.
△4 CERTAIN TERMINALS REQUIRE LUBRICATION. REFER TO THE APPLICATOR INSTRUCTION SHEET FOR MORE INFORMATION.
△5 CUT TO LENGTH AT ASSY.

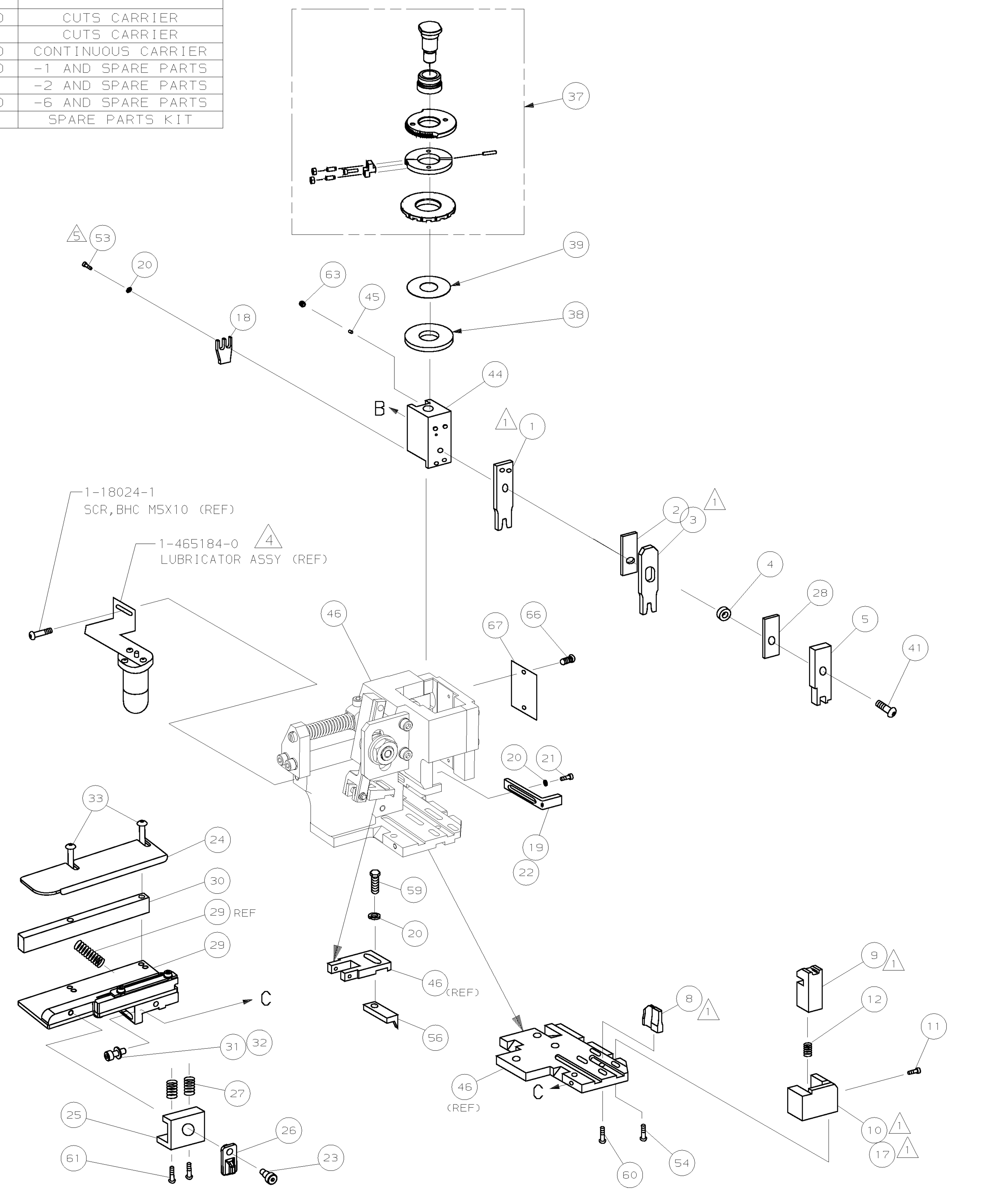

VIEW B ROTATED 180°

POST FEED 40 mm STROKE | POST FEED 30 mm STROKE | PRE FEED 30 mm STROKE | PRE FEED 40 mm STROKE

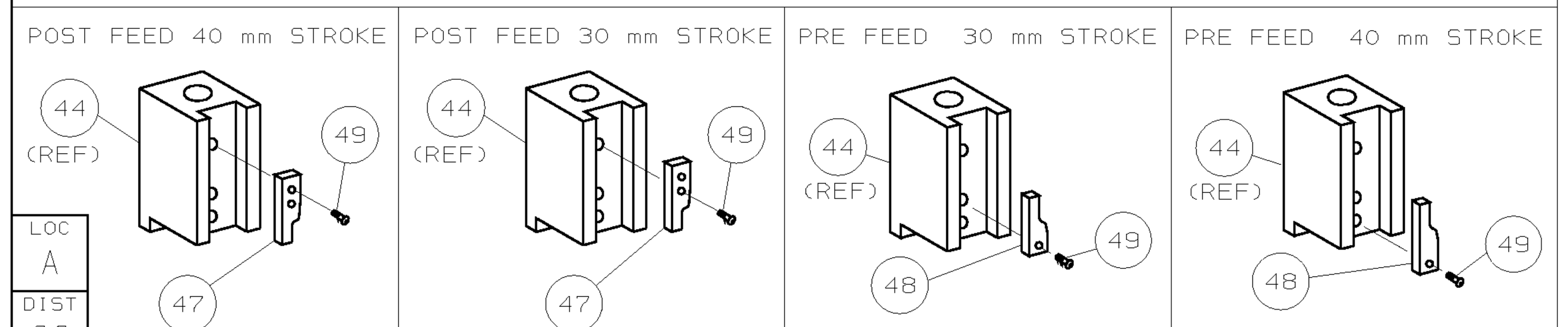

✳ WARNING:
ON INSTALLATION, SET WIRE DISC TO LARGEST WIRE SIZE SETTING. USE OF SETTINGS BELOW MIN REQ'D CRIMP HEIGHT SETTING WILL CAUSE DAMAGE TO CRIMP TOOLING.

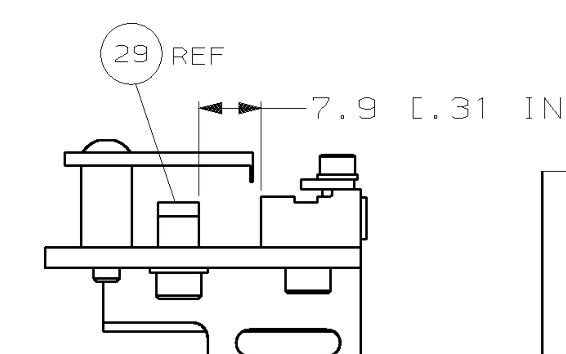

FENCE SET-UP DIM

Note	-77	-76	-72	-71	-6	-2	-1	PART NO	DESCRIPTION	ITEM NO
										73
	-	1	1	1	1	1	1	1528047	PRINT, APPLICATOR LOG SHEET	72
	-	1	1	1	1	1	1	1338705-3	DOCUMENTATION PACKAGE	71
										70
										69
										68
	-	1	1	1	1	1	1	461264-5	PLATE, IDENTIFICATION	67
	-	2	2	2	2	2	2	21017-2	SCR,DRIVE(#2x.19)ID PLATE	66
										65
										64
	-	1	1	1	1	1	1	3-18031-0	SCR,SKT SET(M6X6)RAM	63
										62
	-	2	2	2	2	2	2	1-18024-5	SCR,BHC(M5X25)DRAG	61
	-	1	1	1	1	1	1	18024-7	SCR,BHC(M4X10)ANVIL	60
	-	1	1	1	1	1	1	5-18022-2	SCR,HEX(M4X8)FEED FINGER	59
										58
										57
	-	1	1	1	1	1	1	1338685-1	PAWL, FEED	56
										55
	-	2	2	2	2	2	2	18024-8	SCR,BHC(M4x12)SHEAR HOLDER	54
△5	-	2	2	2	2	2	2	1-18023-0	SCR,SHC(M4x8)TERM HLD DWN	53
										52
										51
										50
	-	1	1	1	1	1	1	18024-3	SCR,BHC(M3X10)CAM	49
	-	-	1	-	-	1	-	1338675-1	CAM, PRE FEED 30 & 40 mm ST	48
	-	1	-	1	1	-	1	1338676-1	CAM, POST FEED 30 & 40 mm ST	47
	-	1	1	1	1	1	1	1320999-3	APPLICATOR BASIC SUBASSY	46
	-	1	1	1	1	1	1	690191-1	PLUG, NYLON	45
	-	1	1	1	1	1	1	1338660-1	RAM	44
										43
										42
	-	1	1	1	1	1	1	2-18024-6	SCR,BHC(M8X25)RAM	41
										40
	-	1	1	1	1	1	1	690125-1	SHIM SUBASSY	39
	-	1	1	1	1	1	1	469367-7	SPACER, FINE ADJUST	38
	-	1	1	1	1	1	1	879103-3	FINE ADJUST HEAD SUBASSY	37
										36
										35
										34
	-	2	2	2	2	2	2	1-18024-0	SCR,BHC(M4X20)STRIP GUIDE	33
	-	1	1	1	1	1	1	18027-2	WASHER, FLAT(M4)	32
	-	1	1	1	1	1	1	1-18023-2	SCR,SKT CAP(M4X12)MOUNT BLOCK	31
	-	1	1	1	1	1	1	1320908-9	SPACER, STRIP GUIDE	30
	-	1	1	1	1	1	1	1633073-1	STRIP GUIDE PLATE ASSY	29
	-	1	1	1	1	1	1	1-455888-0	SPACER, FRONT SHEAR DEP	28
	-	2	2	2	2	2	2	1-22284-0	SPRING, DRAG	27
	-	1	1	1	1	1	1	356835-1	LEVER, DRAG RELEASE	26
	-	1	1	1	1	1	1	240792-1	DRAG, TERMINAL	25
	-	1	1	1	1	1	1	1320928-1	PLATE, STRIP GUIDE	24
	-	1	1	1	1	1	1	980371-4	SCR,SHC SHLD	23
	-	1	-	1	1	-	1	690472-2	STRIPPER	22
	-	1	1	1	1	1	1	1-18023-1	SCR,SHC(M4X10)STRIPPER	21
	-	4	4	4	4	4	4	18025-2	WASHER,LOCK(M4)STRIPPER	20
	-	-	1	-	-	1	-	1424364-1	STRIPPER, WIRE STOP	19
	-	1	1	1	1	1	1	690518-2	HOLDER, TERMINAL	18
△1	-	1	-	-	1	-	-	1338684-1	HOLDER, SHEAR, FRONT (NO-CUT)	17
										16
										15
										14
										13
	-	1	1	1	1	1	1	5-22280-0	SPRING, SHEAR	12
	-	1	1	1	1	1	1	356885-4	STOP, SHEAR	11
△1	-	-	1	1	-	1	1	1320921-1	HOLDER, SHEAR, FRONT (CUT)	10
△1	-	1	1	1	1	1	1	462006-1	SHEAR, FLOAT (FRONT)	9
△1	1	2	2	2	1	1	1	1-1333200-9	ANVIL	8
										7
										6
	-	1	1	1	1	1	1	2-455889-0	DEPRESSOR, SHEAR (FRONT)	5
	-	1	1	1	1	1	1	1-238011-3	SPACER, BLOCK CRIMPER	4
△1	1	2	2	2	1	1	1	7-456135-8	CRIMPER, INSULATION	3
	-	1	1	1	1	1	1	455888-4	SPACER, CRIMPER	2
△1	1	2	2	2	1	1	1	456401-3	CRIMPER, WIRE	1

← REVISION OF EACH ASSY NO (WHEN BLANK, USE DWG REVISION)

QTY REQD PER ASSY — PARTS LIST

LTR	REVISION RECORD	APP	DATE
C	ECN 0150-1338-03	TE	12-03
B	ECN 0150-0831-02	DS	6-02
A	SEE ECN 015A-0882-01	LJL	OCT01

DIMENSIONS: mm [INCHES]
DO NOT SCALE PRINT.
TOLERANCES UNLESS OTHERWISE SPECIFIED:
1 PLC DEC ±0.5 [.02 IN]
2 PLC DEC ±-
3 PLC DEC ±-
ANGLES ± -
SURF TEXTURE: √
REMOVE BURRS, BREAK SHARP EDGES R0.38 MAX

MATL - - | HT TR - - | FIN - -

DR 17SEP01 L.LOFTHOUSE | APP 17SEP01 F.BACKHURST | CHK - - | REL 23OCT01 L.LOFTHOUSE

AMP — AMP Incorporated Harrisburg, PA 17105-3608

NAME: FINE ADJ SIDE FD HD-I APPL | MACHINE REF: HD-I APPL

SCALE - | D | DWG NO 1528047 | SHEET 1 OF 1 | REV C

CAGE CODE 00779 | CUSTOMER AND ASSEMBLY DRAWING | RESTRICTED TO -

LAYOUT L1528047

SET UP GAGE 458637-3

LOC A

DIST 66

THIS DRAWING IS A CONTROLLED DOCUMENT.

THIS DRAWING IS UNPUBLISHED. © COPYRIGHT 2000 BY AMP INCORPORATED. ALL RIGHTS RESERVED. RELEASED FOR PUBLICATION ,2000 .

AMP 1756 REV 3-92 17-DEC-03 08:31:27 us016926

8 7 6 5 4 3 D C B A