VOLVO-CARS:DRAW.PROD-31814589-001§2

DRAWING NUMBER NUMERO DU PLAN	211 FT 0463	REVISION INDICE	E00	SHEET FEUILLE	1/3	APPROVAL LEVEL NIV. D'APPROBATION
DRAWING PLAN	-					

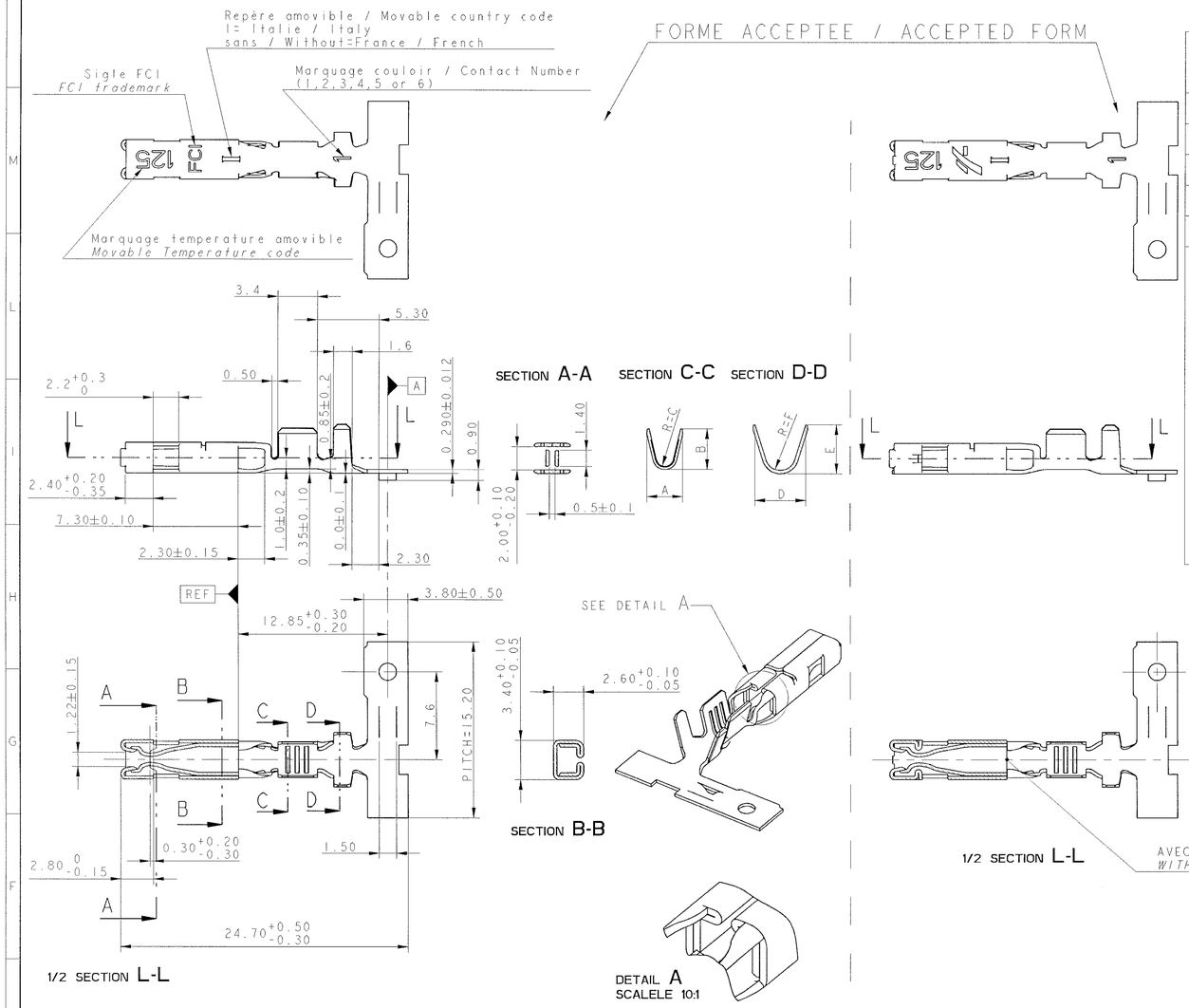

Etat / State	Références								Material	Classe
		JUF / SWS		JUF / SWS		JUF / SWS		JUF / SWS		
Pré-étamé / Pre-tinned Sn 1 to 3µ	211 CC 2 S 0150		211 CC 2 S 1150		211 CC 2 S 4150		211 CC 2 S 2150		Cu Zn 15	85/105°
Pré-étamé / Pre-tinned Sn 1 to 3µ	211 CC 2 S 0160	211 CC 2 S 0161	211 CC 2 S 1160	211 CC 2 S 1161	211 CC 2 S 4160	211 CC 2 S 4161	211 CC 2 S 2160	211 CC 2 S 2161	Cu Fe 2P	125/155°
Post-doré / Post-golded 0.2µ int/ext	211 CC 2 S 0260		211 CC 2 S 1260	211 CC 2 S 1261					Cu Fe 2P	125/155°
Pré-pisté / Pre-tracked 1.27µ int	211 CC 2 S 0460		211 CC 2 S 1460	211 CC 2 S 1461	211 CC 2 S 4460		211 CC 2 S 2460		Cu Fe 2P	125/155°
Pré-pisté / Pre-tracked 0.8µ int-0.4 ext			211 CC 2 S 1560						Cu Fe 2P	125/155°
Section / Gauge	0.22 to 0.35		0.4 to 0.75		0.8 to 1.3		1.35 to 2			
Ø Isolant / Ø Insulation	1.2 to 1.35		1.3 to 2.1		1.8 to 2.6		2.1 to 2.7			
A	1.53		2.6		2.75		3.1			
B	1.87		2.2		2.93		3.5			
R=C	0.33		0.75		0.64		0.75			
D	2.87	4.7	4.2	4.7	4.50	5	4.7	5		
E	3.05	4.15	3.3	4.15	4.30	4.5	4.2	4.5		
R=F	0.68	1.35	1.3	1.35	1.12	1.35	1.3	1.35		
Quantité par bobine / Quantity per reel	5000	4000	5000	4000	4000	4000	4000	4000		
POIDS DU CARTON BOX WEIGHT)	13.4 KG		13.4 KG		13.4 KG		13.4 KG			

PROTECTION OR / GOLD PLATING						
	Pitch of the strip = 15.20 65 terminals per meter					
Reference	Area	Ni B	Ni C	Sn/Pb 90/10	Thickness Au nominal	Thickness Au min
211 CC 2S X 2 60	B1 (INT/EXT)	0.5µMIN	0.1µMAX	1 µMIN 6 µMAX	0.25µ	0.20µ
211 CC 2S X 2 61						
211 CC 2S X 4 60	B2 (INT) Contact point	1µMIN 2µMAX	0.1µMAX		1.52µ	1.27µ
211 CC 2S X 4 61						
211 CC 2S X 5 60	B2 (INT) Contact point			1 µMIN 3 µMAX	0.98µ	0.8µ
	B3 (EXT)				0.5µ	0.4µ

ZONE ET DIMENSIONS VALABLES POUR TOUTES REFERENCES
AREA AND DIMENSIONS ARE VALID FOR ALL REFERENCES

INDICE PIECE=INDICE MAJEUR PLAN
PART REVISION LEVEL=REVISION MAJOR DRAWING

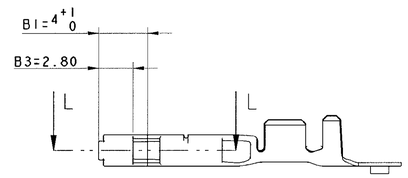

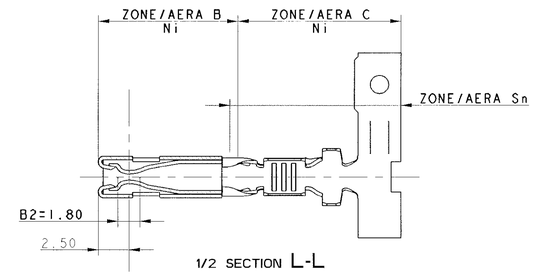

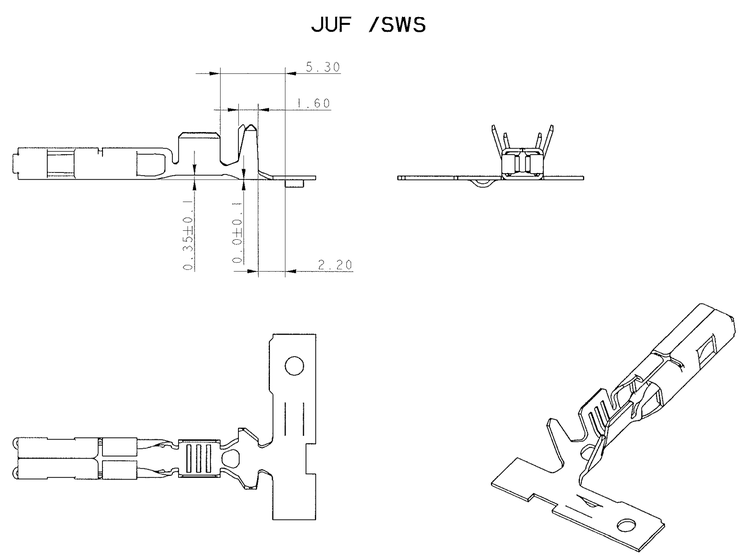

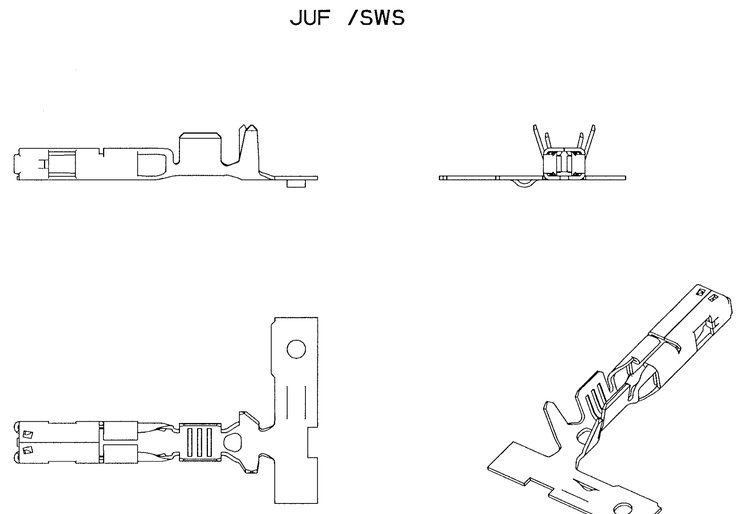

CONNECTIQUE SICMA-3

ARCHIVE LE 24/07/03

ECN-NO. NUMERO ECN	DATE DD/MM/YY DATE	REVISION INDICE	POSITION POSITION	CHANGE DESCRIPTION MODIFICATION	DRAWN BY DESSINE PAR	CHECKED BY VERIFIE PAR	APPROVED BY APPROUVE PAR
A 03 031	28/07/03	E00	-	ADD: 3D MODEL - CHANGE CAD SYSTEM	HERNANDEZ		
			-	DRAWING ISSUED OF 211 FT 0462 REV. E02 AND			
			-	PC 211 CC 25 XXXX REV. E00			
			-	ADD: A NEW FORM - ADD ALL REFERENCES			
			-	211 FT 0288 REPLACED BY THE 211 FT 0463			

ANCIENNE

PRODUCT SPEC. PRODUIT: - | PACKAGING SPEC. SPECIF. EMBALLAGE: - | APPLICATION SPEC. SPECIF. APPLICATION: -

THIS DRAWING AND ALL OTHER INFORMATION CONTAINED THEREIN IS PROPRIETARY AND THE PROPERTY OF FCI. This drawing may not be copied, reproduced or disclosed to any third party without the expressed written permission of FCI. © FCI April 1999

CE PLAN ET LES INFORMATIONS CONTENUES DANS CE PLAN SONT PROPRIETAIRES ET LA PROPRIETE DE FCI. Ce plan ne peut être copié, reproduit ou transmis sans l'autorisation expresse et écrite de FCI. © FCI Avril 1999

TOLERANCES / TOLERANCES: ±0.2 ±2° | MATERIAL / MATIERE: SEE TABLE | SURFACE FINISH / ETAT DE SURFACE: -

CONTRACT No / CONTR PATENT N°: - | COLOUR / COULEUR: - | ISO PROJECTION / PROJECTION ISO: pro / eng.

DO NOT SCALE DRAWING / NE PAS PRENDRE DE COTES | CIVIL NO / CIVILE N° | ECO LVL CAD / NIVEAU D.E.C. FE | DIMENSIONS IN MILLIMETERS / DIMENSIONS EN MILLIMETRES | CAD SYSTEM / DWG SIZE / FORMAT: A1

	DATE	NAME / NOM
DRAWN BY / DESSINE PAR	23/07/03	HERNANDEZ.S
CHECKED BY / VERIFIE PAR		
APPROVED BY / APPR. PAR		

TITLE / DESIGNATION: SICMA 3 1.5 x 0.8 FEMALE TERMINAL

DRAWING NUMBER / REFERENCE PLAN: 211 FT 0463 | SHEET / FEUILLE: 1 of 3

ESR NO / NUMERO ESR: FRA-0332 | CAT. NO / NUMERO CAT.: - | FILE NAME / NOM DE FICHIER: 211FT0463 | SCALE / ECH.: 4:1