DRAWING MADE IN THIRD ANGLE PROJECTION

THIS DRAWING IS UNPUBLISHED. RELEASED FOR PUBLICATION ,1988.
© COPYRIGHT 1988 BY AMP INCORPORATED. ALL INTERNATIONAL RIGHTS RESERVED.

PROD CODE	LOC	DIST
S327	DF	F0

REVISIONS

P	F	ZONE	LTR	DESCRIPTION	DATE	APPD
	✓		B	REV & REDWN PER DF-5332 AJG	1-92	DG
	✓		C	REV PER 0600-1388-93 TA	5-4-94	DG

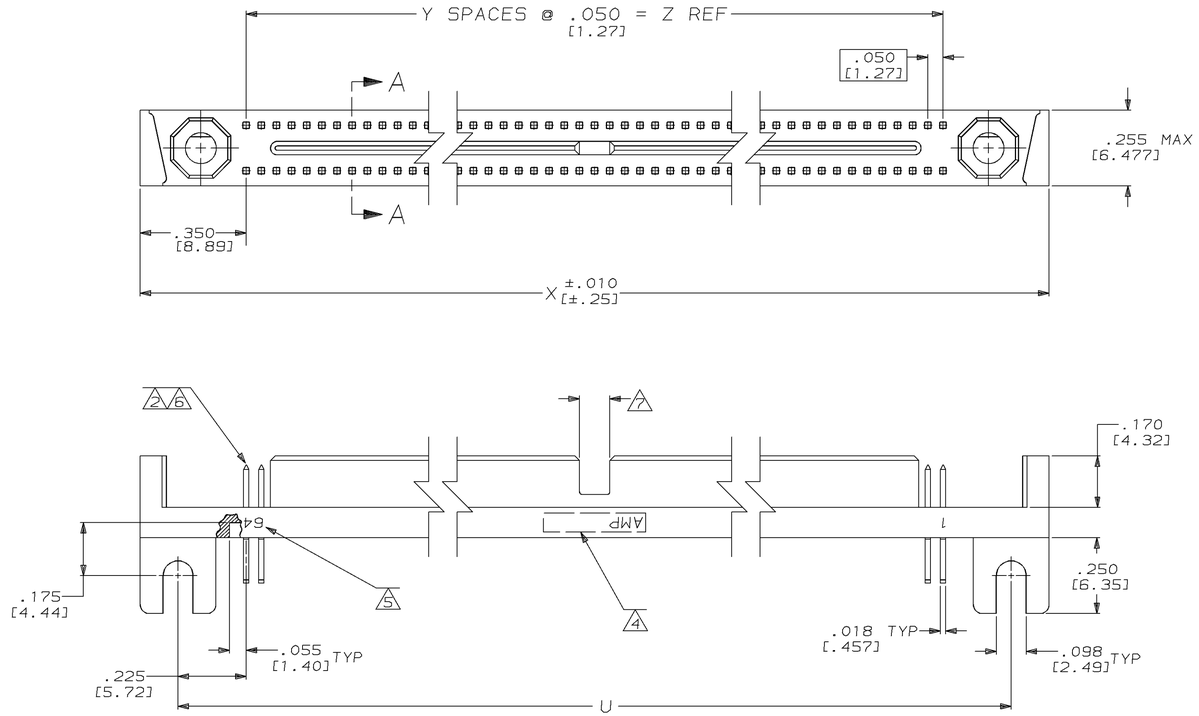

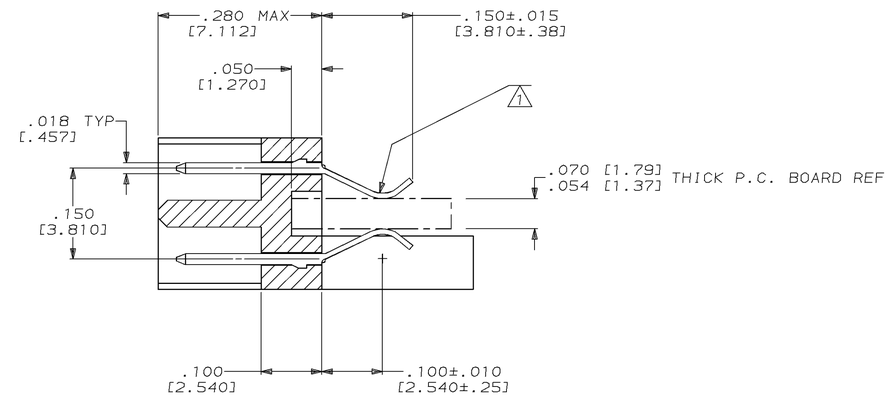

SECTION A-A
SCALE 8:1

1. TABS PRE-TINNED THIS AREA.
2. FINISH: .000030 GOLD IN CONTACT AREA, SELECTIVE OVER NICKEL.
3. HOUSING MATERIAL: LIQUID CRYSTAL POLYMER PER MIL-M-24519, GLCP-30F; COLOR: GRAY.
4. AMP PART NUMBER AND DATE CODE MARKED IN THIS APPROXIMATE AREA.
5. NUMBERS INDICATING END POSITIONS MARKED, THIS SIDE ONLY.
6. CONTACT MATERIAL: BRASS.
7. FEATURE NOT PRESENT IN 20 THRU 50 POSITION.

OBSOLETE	3	1 - 10	.450 [11.43]	9	1.150 [29.21]	.900 [22.86]	20	1-530719-1
OBSOLETE	3	1 - 15	.700 [17.78]	14	1.400 [35.56]	1.150 [29.21]	30	1-530719-0
	3	1 - 64	3.150 [80.01]	63	3.850 [97.79]	3.600 [91.44]	128	530719-9
OBSOLETE	3	1 - 55	2.700 [68.58]	54	3.400 [86.36]	3.150 [80.01]	110	530719-8
	3	1 - 50	2.450 [62.23]	49	3.150 [80.01]	2.900 [73.66]	100	530719-7
	3	1 - 45	2.200 [55.88]	44	2.900 [73.66]	2.650 [67.31]	90	530719-6
	3	1 - 40	1.950 [49.53]	39	2.650 [67.31]	2.400 [60.96]	80	530719-5
	3	1 - 35	1.700 [43.18]	34	2.400 [60.96]	2.150 [54.61]	70	530719-4
	3	1 - 30	1.450 [36.83]	29	2.150 [54.61]	1.900 [48.26]	60	530719-3
	3	1 - 25	1.200 [30.48]	24	1.900 [48.26]	1.650 [41.91]	50	530719-2
	3	1 - 20	.950 [24.13]	19	1.650 [41.91]	1.400 [35.56]	40	530719-1
HSG MAT'L	5		Z	Y	X	U	NO. OF POSN.	PART NUMBER

DO NOT SCALE PRINT.
UNLESS SPECIFIED
DIMENSIONS IN INCHES [mm]
TOLERANCES ON :
2 PLC DEC ± —
3 PLC DEC ±.005 [.013]
ANGLES ± 0° 30'

MATERIAL
CONTACT: BRASS
HOUSING: 3

FINISH
CONTACT: 1 2

DR 11-19-91 AJ GRAFF
CHK 12-4-91 D.GUTTER
APPD 12-4-91 D.GUTTER
APPD 12-4-91 D.GUTTER
PRODUCT SPEC –
APPLICATION SPEC –
WEIGHT _

AMP | AMP INCORPORATED Harrisburg, Pa. 17105

NAME
PIN HEADER ASSEMBLY,
MINI BOX,
STANDARD

SIZE	FSCM NO	DRAWING NO
D	00779	530719
SCALE 4:1		SHEET 1 OF 1

CUSTOMER DRAWING

AMP 17756-3 REV 3-87

04 MAY 1994 10:57:26 AMP34874 x401280-DEPT8039-U.BOX