UNCONTROLLED DOCUMENT

PART NUMBER	REV.
OED-SP5093L30	

REV.	E.C.N. NUMBER AND REVISION COMMENTS	DATE

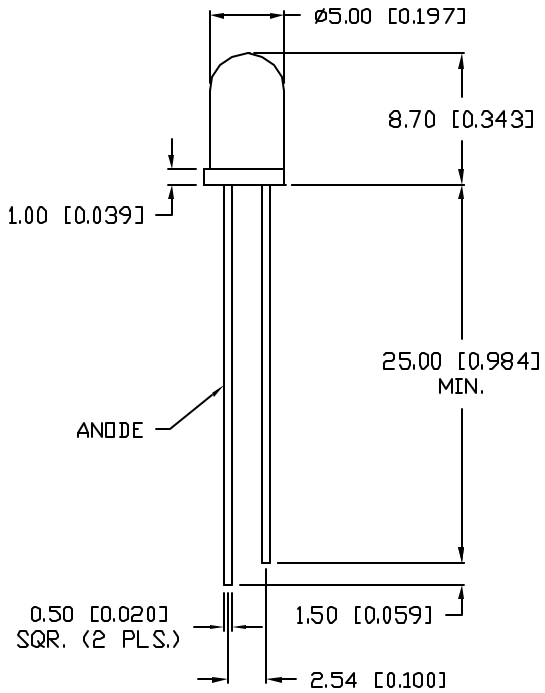

NOTE:

1. ACTIVE AREA: 0.43 x 0.43mm.

ANODE ⟶▷⟶ CATHODE

ELECTRO-OPTICAL CHARACTERISTICS T_A =25°C

PARAMETER	SYMBOL	TEST CONDITION	MIN	TYP	MAX	UNIT
OPEN CIRCUIT VOLTAGE	Voc	Ee=0.5mw/cm²		0.39		V
SHORT CIRCUIT CURRENT	Isc	Ee=0.5mw/cm²		50		µA
DARK CURRENT	Id	Vr=10V Ee=0.5mw/cm²			10	nA
TERMINAL CAPACITANCE	Ct	Vr=3V, F=1MHz		5		pF
RESPONSE TIME	Tr/Tf	Vr=10V,Rl=1000 Ω		6/6		nS
SPECTRAL SENSITIVITY	λ			700~1000		nm
PEAK WAVELNGTH	λp			940		nm
HALF ANGLE	Δθ			±15		DEG
LENS COLOR:	BLACK					

LIMITS OF SAFE OPERATION AT 25°C

PARAMETER	MAX	UNITS
REVERSE VOLTAGE	20	V
POWER DISSIPATION	20	mW
OPERATING TEMP.	-20 TO +70	°C
STORAGE TEMP.	-30 TO +80	°C
SOLDERING TEMP.	+230	°C
2.0mm FROM BODY		3 SEC. MAX

UNCONTROLLED DOCUMENT

*UNLESS OTHERWISE SPECIFIED TOLERANCE IS ±0.25mm (±0.010")

REV.	PART NUMBER
	OED-SP5093L30

T-5mm PHOTODIODE WITH DAYLIGHT FILTER.

CONFIDENTIAL INFORMATION
THE INFORMATION CONTAINED IN THIS DOCUMENT IS THE PROPERTY OF LUMEX INC. EXCEPT AS SPECIFICALLY AUTHORIZED IN WRITING BY LUMEX INC., THE HOLDER OF THIS DOCUMENT SHALL KEEP ALL INFORMATION CONTAINED HEREIN CONFIDENTIAL AND SHALL PROTECT SAME IN WHOLE OR IN PART FROM DISCLOSURE AND DISSEMINATION TO ALL THIRD PARTIES.

RELIABILITY NOTE
OUR MANY YEARS OF EXPERIENCE DATA ACCUMULATION INDICATE THAT SOLDER HEAT IS A MAJOR CAUSE OF EARLY AND FUTURE FAILURE. PLEASE PAY ATTENTION TO YOUR SOLDERING PROCESS.

LUMEX INCORPORATED
290 E. HELLEN ROAD
PALATINE, ILLINOIS 60067
PHONE: 1-847-359-2790
WEB: HTTP://WWW.LUMEX.COM

DRAWN BY:	CHECKED BY:	APPROVED BY:	DATE: 8-9-99
TM/BC			PAGE: 1 OF 1
			SCALE: N/A