EVC 250 Main Contactor

- **Limiting continuous current 250A at 85°C**
- **Suitable for voltage levels up to 450VDC**
- **High peak current carrying capability up to 6000A[1)]**

Typical applications

- DC high voltage high current applications
- Main contactors for hybrid, full battery electric vehicles and fuel-cell cars
- Battery charging systems

Contact Data

Contact arrangement	1 Form X (SPST NO DM)
Rated voltage	450VDC
Max. switching voltage	500VDC, depending on load characteristics[1)]
Rated current Forward load current direction, cable 50mm²	250A
Limiting continuous current 85°C, load cable 50mm²	250A
Limiting short-time current 85°C, load cable 50mm²	400A 5min 600A 1min 6000A 20ms
Limiting make current resistive load, cable 50mm², 23°C, 50VDC	50000x 250A
Limiting break current Forward load current direction altitude max 5000m, 400VDC	1x2000A 5000x200A 50000x100A
Limiting break current Reverse load current direction resistive load, cable 50mm², 23°C altitude max 5000m, 400VDC	20x200A 10000x100A
Initial voltage drop at 100A	<40mV after 1min
Operate/release time max.	25ms at 14VDC (coil voltage)
Mechanical endurance	>500000 ops.

1) Values are influenced by system temperature and load current. Please contact. TE Connectivity for details.

Coil Data

Max. coil temperature	155°C

Coil version with external economizer[2)]

Coil code	Rated voltage VDC	Min. pull-in current A	Max. pull-in current A	Min. hold current mA (DC)	Coil resistance Ω±10%
0001[3)]	12	1.7[4)]	4.0[4)]	600[5)]	4[6)]

2) Please refer to circuit recommendation diagramm for coil 001.
3) Requires external coil economizer, min. clamp voltage 40V (see circuit recommendation).
4) Duration min. 100ms and max. 2s to avoid over temperature.
5) Fully compliant with shock and vibration requirements. The average coil current after inrush should not exceed 1.5A.
6) Avoid repetitive switching. The average dissipated power within a period of 10 seconds should not exceed 10W.

Double coil version with internal switch

Coil code	Rated voltage VDC	Pull-in voltage VDC	Hold voltage VDC	Maximum voltage VDC	Coil resistance Ω±10%
0002[7)]	12	7.0[8)]	4.0	16	3/36[9)]

7) Max. duty cycle 0.5Hz.
8) Valid for cold coil at 23°C ambient temperature, max. rise time 100ms.
9) Internal switch from 3Ω to 36Ω coil min. 120ms after pull-in. Demagnetization voltage is clamped at max. -60V. No external termination necessary. External termination could reduce switching capability. Please contact TE Connectivity for details.

Insulation Data

Initial dielectric strength	
between open contacts	2800VDC / 3mA
between contact and coil	2800VDC / 3mA
max. altitude	5000m
Insulation resistance after 2000A abuse test	
between open contacts	>200MΩ
between contact and coil	>200MΩ
Clearance/creepage acc. IEC 60664-1 (2007) for	over voltage category I, pollution degree 2

Coil operating range (for coil 002 only)

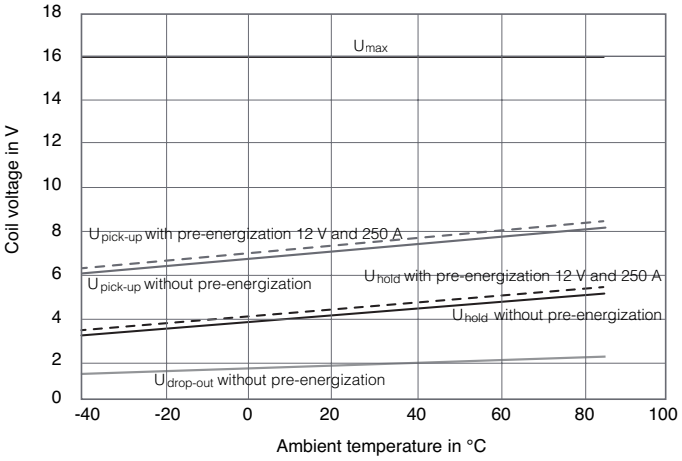

Typical release time (coil switch-off until contact opens) versus clamp voltage for 12VDC energization

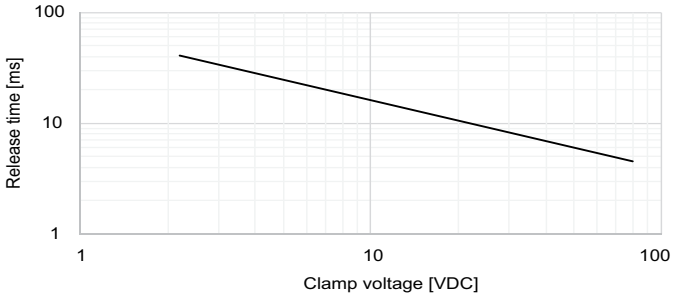

The values for switching capability are only valid for coil termination of 75VDC. For other termination voltages please contact TE Connectivity application engineering.

04-2015, Rev. 0415
www.te.com

EVC 250 Main Contactor (Continued)

Other Data	
Ambient temperature	-40°C to +85°C
Degree of protection dustproof:	IP54 (IEC 60529), RT I (IEC 61810)
Vibration resistance (functional) IEC 60068-2-6 (sine sweep)	10 to 500Hz, min. 10g.
Shock resistance (functional)[10] IEC 60068-2-27 (half sine)	closed: 11ms, min. 40g open: 11ms, min. 20g
Terminal type	connector (coil) and screw (load)
Weight	approx. 560g (19.7oz)
Packaging unit and delivery	24 pcs.

10) No change in the switching state >10µs.

Terminal Assignment

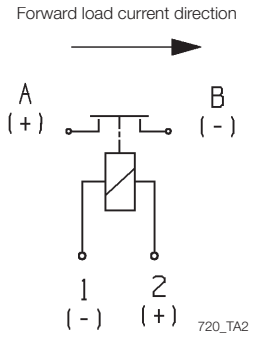

Circuit recommendation for coil 0001

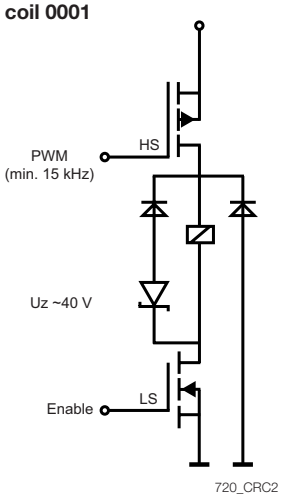

Dimensions

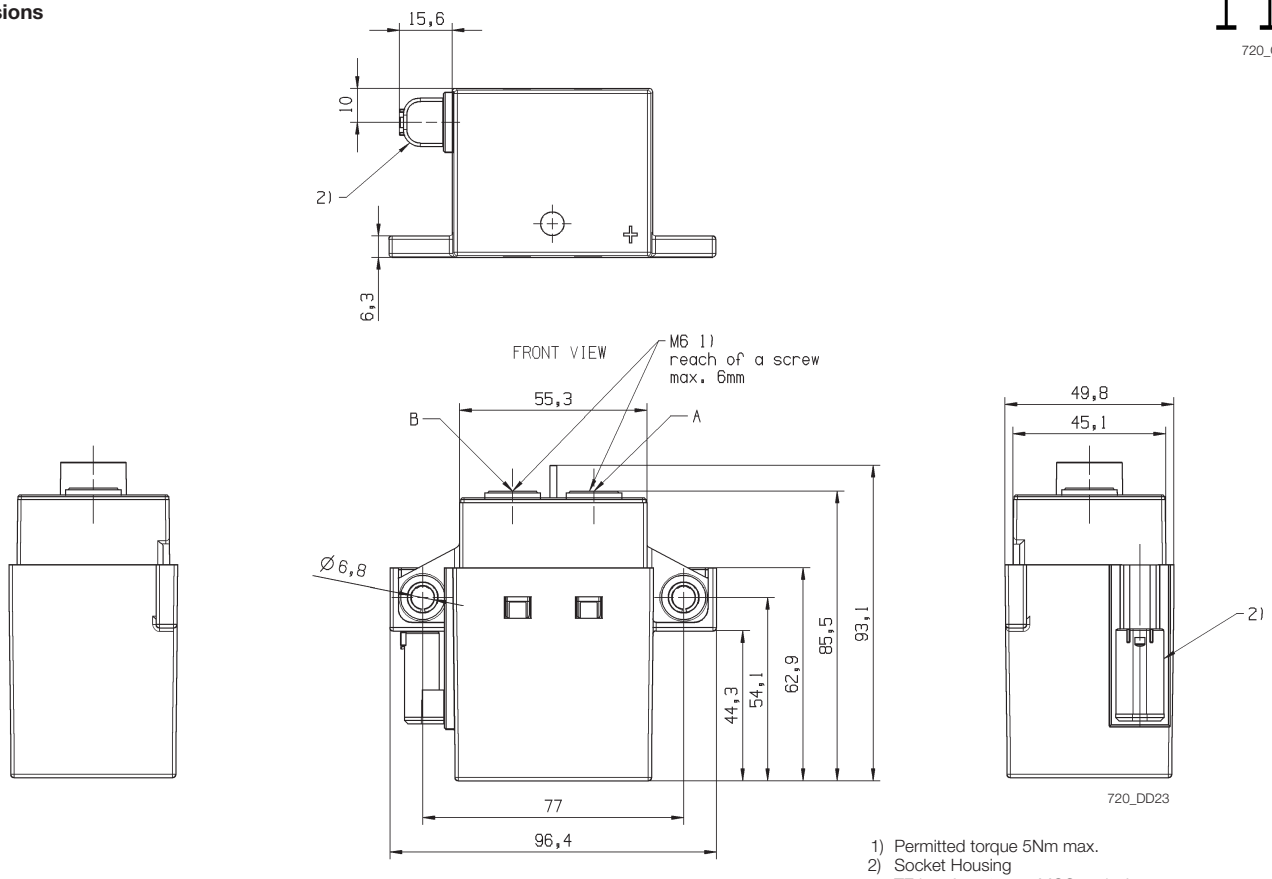

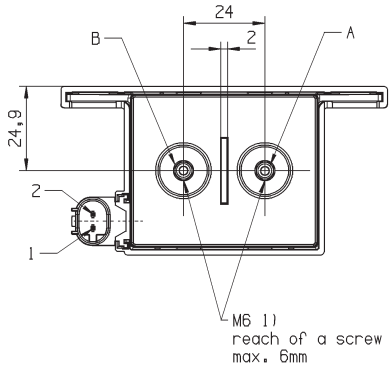

1) Permitted torque 5Nm max.
2) Socket Housing
TE Interface 2 pos. MQS code A,
appropriate for socket housing 2 pos. MQS,
TE part no. 1-967644-1
Prescribed wire cross section = 0.35mm^2 min.

Tolerances ISO8015 / ISO2768-cL

EVC 250 Main Contactor (Continued)

Product code structure Typical product code **V23720 -A 0001 -A 0 01**

Type
V23720 EVC 250 Main Contactor

Contact arrangement
A SPST NO DM

Coil
0001 Single coil **0002** Double coil

Relay type
A 450VDC

Contact material
0 Standard

Standard version
01 Standard

Product code	Cont. arrang.	Coil	Circuit	Coil suppr.	Relay type	Resistance	Part number
V23720-A0001-A001	SPDT-NO-DM	12VDC	No economizer	External >40V	450VDC	4Ω	2-1904070-2
V23720-A0002-A001			Coil switch	Internal		Double coil 3/36Ω	4-1904065-7

04-2015, Rev. 0415
www.te.com