THIS DRAWING IS UNPUBLISHED. RELEASED FOR PUBLICATION -,- .
© COPYRIGHT - By - ALL RIGHTS RESERVED.

| LOC | DIST |
|---|---|
| GP | 00 |

REVISIONS

| P | LTR | DESCRIPTION | DATE | DWN | APVD |
|---|---|---|---|---|---|
| | G | REVISED PER ECO-13-001881 | 02APR2013 | LJC | T.T |

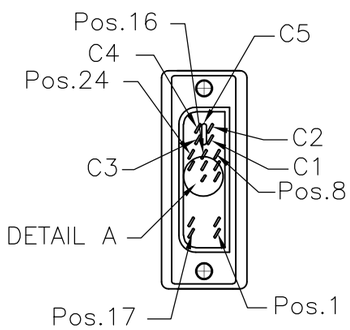


P1

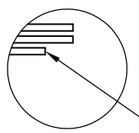


SIDE VIEW OF DETAIL A

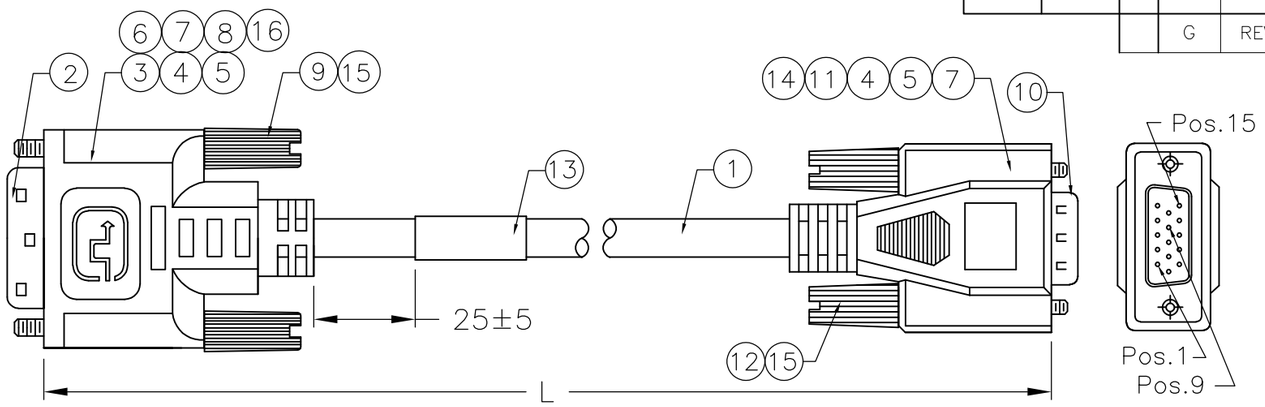


P2

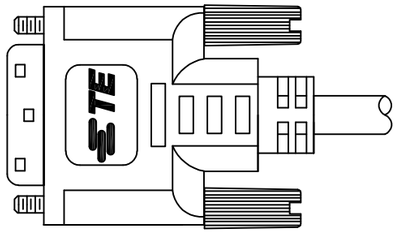

BACK SIDE

| LENGTH(L) | CUSTOMER P/N | TE P/N |
|---|---|---|
| 3000±80 | | 1653932-3 |
| 2000±60 | | 1653932-2 |
| 1000±30 | | 1653932-1 |

TE P/N
YYWW
MADE IN CHINA

LABEL

| | | | | DESCRIPTION | ITEM |
|---|---|---|---|---|---|
| AR | AR | AR | MR | UL TAPE, BLACK | 16 |
| AR | AR | AR | KG | PVC, Shore A 95±3, Color: White (WH03). | 15 |
| AR | AR | AR | MR | Copper Foil, W: 30mm. | 14 |
| 1 | 1 | 1 | PC | Label, Size: 25.0*35.0, White: 25.0*13.0mm. | 13 |
| 2 | 2 | 2 | PC | #4-40 Screw, L=43mm | 12 |
| AR | AR | AR | KG | Inner Molded PE | 11 |
| 1 | 1 | 1 | PC | HDDB15, Male, Solder Type, Contact: Gold Flash | 10 |
| 2 | 2 | 2 | PC | DVI #4-40 3*45mm Thumbscrew. | 9 |
| AR | AR | AR | MR | Copper Foil, W:8mm. | 8 |
| AR | AR | AR | KG | PVC, Shore A 90±3, Color: White (WH03). | 7 |
| AR | AR | AR | g | Solder Wire | 6 |
| AR | AR | AR | MR | Heat Shrink Tubing, OD:2.5mm, Color: Black. | 5 |
| AR | AR | AR | MR | Heat Shrink Tubing, OD:1.5mm, Color: Black. | 4 |
| 1 | 1 | 1 | PC | Metal Can For DVI Connector, Meet OD: 7.4mm | 3 |
| 1 | 1 | 1 | PC | DVI-A Connector, Gold Flash | 2 |
| AR | AR | AR | MR | UL20276 30AWG*3Coax.+28AWG*1Pair +28AWG*5C+Al/Mylar+Braid, Color: Black(BK01) | 1 |
| -3 | -2 | -1 | U/M | | |

NOTES:

1. CABLE SHALL BE TESTED WITH AUTOMATED TEST EQUIPMENT FOR THE FOLLOWING:
   A. CONNECTION RESISTANCE SHALL NOT EXCEED 1.8 OHMS.
   B. INSULATION RESISTANCE 100 MEGOHMS, MIN.
   C. HIPOT-300 VOLTS AT 0.01 SEC.
2. CABLE ASSEMBLY MUST PASS DVI 1.0 SPECIFICATION.
3. DIRECTIVE 2002/95/EC COMPLIANT.
4. 100% DISPLAY-SCREEN FUNCTIONAL TESTING

PIN ASSIGNMENT :

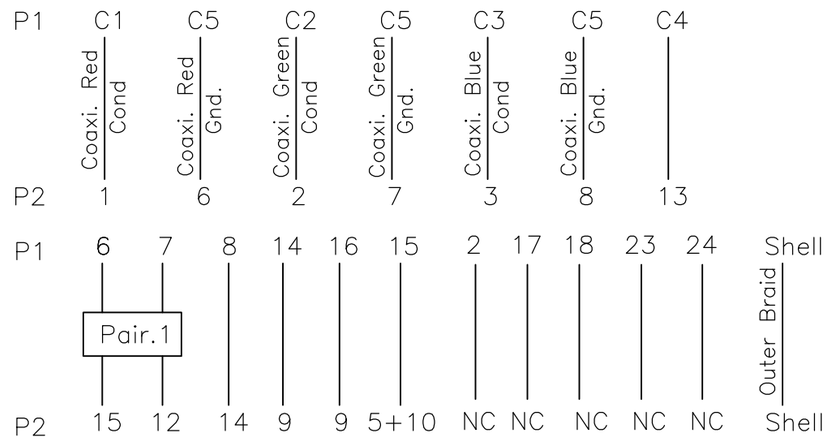


THIS DRAWING IS A CONTROLLED DOCUMENT.

DIMENSIONS: mm

TOLERANCES UNLESS OTHERWISE SPECIFIED:
0 PLC ±-
1 PLC ±-
2 PLC ±-
3 PLC ±-
4 PLC ±-
ANGLES ±-

MATERIAL -

FINISH -

| | | |
|---|---|---|
| DWN JURRY LIU | 22JAN03 | |
| CHK MONTGOMERY, JOHN D | 15JUN04 | |
| APVD MONTGOMERY, JOHN D | 15JUN04 | |
| PRODUCT SPEC — | | |
| APPLICATION SPEC — | | |
| WEIGHT — | | |

TE Connectivity

NAME DVI-A TO VGA CABLE ASSEMBLY
—

| SIZE | CAGE CODE | DRAWING NO | RESTRICTED TO |
|---|---|---|---|
| A3 | 00779 | C-1653932 | — |

CUSTOMER DRAWING | SCALE N.T.S | SHEET 1 OF 1 | REV G