THIS DRAWING IS UNPUBLISHED. RELEASED FOR PUBLICATION -,- .
© COPYRIGHT - By - ALL RIGHTS RESERVED.

LOC	DIST
AD	00

REVISIONS

P	LTR	DESCRIPTION	DATE	DWN	APVD
	E3	REVISED PER ECR-13-018488	26NOV13	W.W	C.W

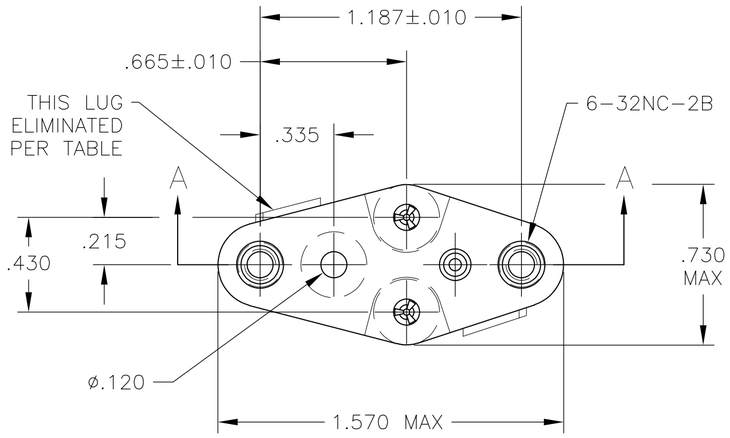

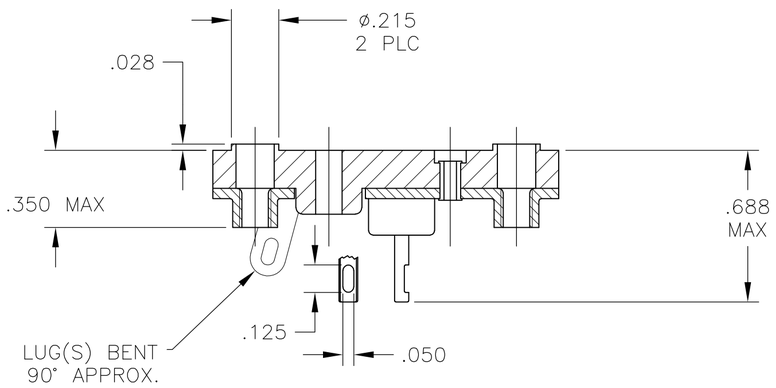

SECTION A-A

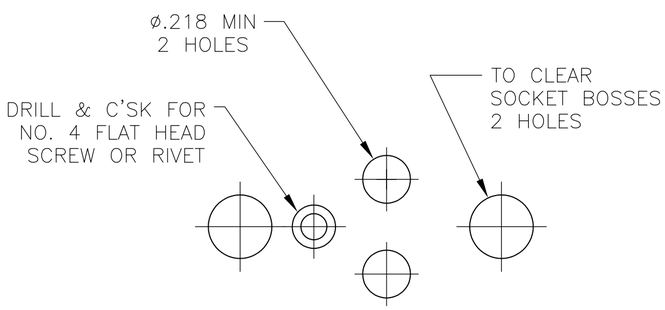

RECOMMENDED CHASSIS HOLE LAYOUT

SPECIFICATIONS:

MATERIALS-
INSULATOR: UL94V-O (SEE TABLE FOR MATERIAL)
CONTACT: BERYLLIUM COPPER (SEE TABLE FOR PLATING)

ELECTRICAL-
CONTACT RESISTANCE: GOLD - 15 MILLIOHMS, PER MIL-STD-12883
TIN- 25 MILLIOHMS MAX
CONTACT RATING: 10 AMPS DC
DIELECTRIC WITHSTANDING VOLTAGE- 1500 VOLTS(RMS)

MECHANICAL-
OPERATIONAL TEMPERATURE: DAP -67F TO +257F
(-55C TO +125C)

NOTES

1. INTERPRET DRAWING PER ASME Y14.5M-1994.
2. THIS ASSEMBLY IS INTENDED FOR USE WITH SEMI-CONDUCTORS PACKAGED WITHIN THE OUTLINE DIMENSIONS OF THE "TO-3".
3. LUG(S) IS AN INTEGRAL PART OF SADDLE.
4. .000200 MIN THK TIN-LEAD PLATE OVER .000100 MIN THK COPPER PLATE.
5. .000030 MIN THK GOLD PLATE OVER .000050 MIN THK NICKEL PLATE.
6. .000500 MIN THK SILVER PLATE.
7. .000050 MIN THK GOLD PLATE OVER .000050 MIN THK NICKEL PLATE.
8. .000200 MIN THK TIN (LEAD FREE) PLATE OVER .000100 MIN THK COPPER PLATE.

9 OBSOLETE PARTS: OBSOLETE CIS STREAMLINING PER D.RENAUD/D.SINISI

	LUG QTY (SEE NOTE 3)	LEAD DIA	INSULATOR MATERIAL/COLOR	CONTACT PLATING	AUGAT PT. NO. (REFERENCE)	PT. NO.
	1	.040+.003/-.002	DIALLYL PHTHALATE-GREEN OR BLUE	NOTE 5	8080-1G9-LF	5-6437504-5
	2	.040+.003/-.002	DIALLYL PHTHALATE-GREEN OR BLUE	NOTE 5	8080-1G7-LF	5-6437504-3
	2	.040+.003/-.002	DIALLYL PHTHALATE-GREEN OR BLUE	NOTE 8	8080-1G5-LF	5-6437504-2
	1	.040+.003/-.002	DIALLYL PHTHALATE-GREEN OR BLUE	NOTE 6	8080-1G4-LF	5-6437504-0
	2	.040-.060	PHENOLIC-BLACK	NOTE 8	8080-1G20-LF	8-1437504-9
	2	.040+.003/-.002	DIALLYL PHTHALATE-GREEN	NOTE 7	8080-1G19-LF	8-1437504-6
	2	.040-.060	PHENOLIC-BLACK	NOTE 8	8080-1G15-LF	8-1437504-3
	1	.040-.060	PHENOLIC-BLACK	NOTE 8	8080-1G14-LF	8-1437504-2
	2	.040+.003/-.002	DIALLYL PHTHALATE-GREEN	NOTE 5	8080-1G10-LF	8-1437504-0
	2	.040-.060	DIALLYL PHTHALATE-GREEN OR BLUE	NOTE 6	8080-1G16-LF	6-1437504-6
	2	.040+.003/-.002	DIALLYL PHTHALATE-GREEN OR BLUE	NOTE 8	8080-1G3-LF	6-1437504-5
	2	.040+.003/-.002	DIALLYL PHTHALATE-GREEN OR BLUE	NOTE 6	8080-1G2-LF	6-1437504-4
	2	.040+.003/-.002	DIALLYL PHTHALATE-GREEN OR BLUE	NOTE 8	8080-1G1-LF	6-1437504-3
SUPERSEDED	1	.040+.003/-.002	DIALLYL PHTHALATE-GREEN OR BLUE	NOTE 7	8080-1G18	5-1437504-9
	1	.040+.003/-.002	DIALLYL PHTHALATE-GREEN OR BLUE	NOTE 5	8080-1G9	5-1437504-5
	2	.040+.003/-.002	DIALLYL PHTHALATE-GREEN OR BLUE	NOTE 5	8080-1G7	5-1437504-3
	2	.040+.003/-.002	DIALLYL PHTHALATE-GREEN OR BLUE	NOTE 4	8080-1G5	5-1437504-2
	1	.040+.003/-.002	DIALLYL PHTHALATE-GREEN OR BLUE	NOTE 6	8080-1G4	5-1437504-0
	1	.040+.003/-.002	PHENOLIC-BLACK	NOTE 4	8080-1G3	4-1437504-2
9 OBSOLETE	2	.040-.060	PHENOLIC-BLACK	NOTE 4	8080-1G20	~~3-1437504-9~~
	2	.040+.003/-.002	DIALLYL PHTHALATE-GREEN OR BLUE	NOTE 6	8080-1G2	3-1437504-8
	2	.040+.003/-.002	DIALLYL PHTHALATE-GREEN OR BLUE	NOTE 7	8080-1G19	3-1437504-6
	2	.040-.060	DIALLYL PHTHALATE-GREEN OR BLUE	NOTE 6	8080-1G16	3-1437504-4
	2	.040-.060	PHENOLIC-BLACK	NOTE 4	8080-1G15	3-1437504-3
	1	.040-.060	PHENOLIC-BLACK	NOTE 4	8080-1G14	3-1437504-2
	2	.040+.003/-.002	DIALLYL PHTHALATE-GREEN OR BLUE	NOTE 4	8080-1G13	3-1437504-1
	2	.040+.003/-.002	DIALLYL PHTHALATE-GREEN OR BLUE	NOTE 5	8080-1G10	3-1437504-0
	2	.040+.003/-.002	DIALLYL PHTHALATE-GREEN OR BLUE	NOTE 4	8080-1G1	2-1437504-9

2-1437504-9

THIS DRAWING IS A CONTROLLED DOCUMENT.

DIMENSIONS: INCHES

TOLERANCES UNLESS OTHERWISE SPECIFIED:
0 PLC ± -
1 PLC ± -
2 PLC ± -
3 PLC ± -
4 PLC ± -
ANGLES ± -

MATERIAL: SEE NOTES
FINISH: SEE NOTES

DWN R BROWN 31MAR05
CHK K WRIGHT 31MAR05
APVD K WRIGHT 31MAR05
PRODUCT SPEC —
APPLICATION SPEC —
WEIGHT —

TE Connectivity

NAME: TRANSISTOR SOCKET

SIZE	CAGE CODE	DRAWING NO	RESTRICTED TO
A2	00779	C-2-1437504-9	—

CUSTOMER DRAWING | SCALE 2:1 | SHEET 1 OF 1 | REV E3