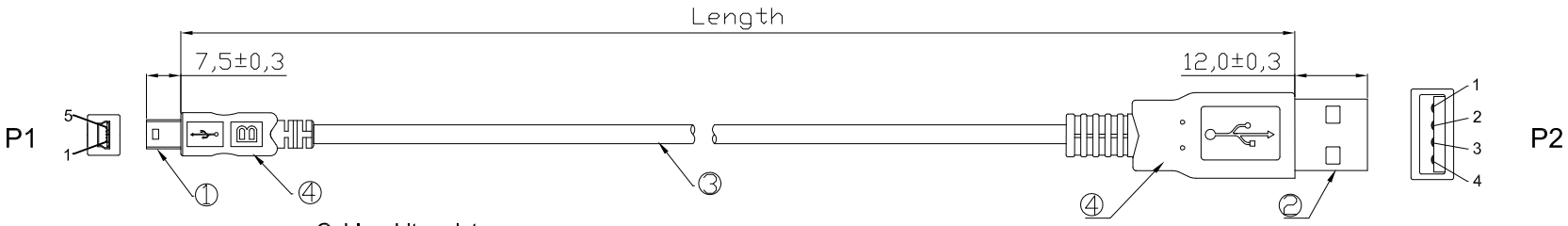

Cable white print
HI-SPEED USB Revision 2.0 SHIELDED 28AWG/1P+28AWG/2C
AWM STYLE 2725 80°C 30V VW-1

WSW P/N	Jacket color	Length(mm)
AK672M/2-1-GR-R	Grey	1000±30
AK672M/2-2-GR-R	Grey	2000±50
AK672M/2-3-GR-R	Grey	3000±50
AK672M/2-5-GR-R	Grey	5000±50

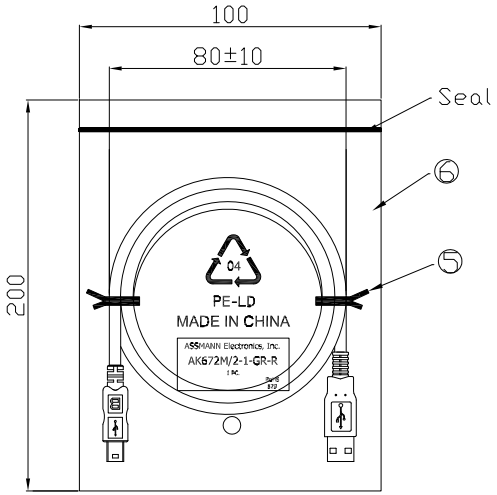

1PCS/PE Bag

PIN ASSIGNMENT

P1		P2
1	Red	1
2	White	2
3	Green	3
5	Black	4
SHELL	Drain+Braid	SHELL

Electrical test:
1. 100% short, open, miswire test
2. Conduct resistance: 2 Ohm max.
3. Insulator resistance: 10Mohm min.
4. Dielectric test: DC 300V

NO.	NAME.	Q'TY	SPECIFICATION
⑦	PE Bag	1/10	Clear size: 230x300x0.05mm Print black "MADE IN CHINA" + "10PCS"
⑥	PE Bag	1	Clear size: 100x200x0.05mm Print black "MADE IN CHINA"+ "1PC"
⑤	TIE	2	Black L=100mm
④	Out Jacket	12g	Grey(A-112#) PVC-50P (Mold No.: WM-40 & WM-88)
③	Cable	1	Grey(A-112#) USB2.0 UL2725 28#/1P+28#/2C+AEB OD:3.8mm
②	CONN	1	USB 2.0 A/type Male SHELL:Nickel PIN:G/F 4PCS Insulator color:White
①	CONN	1	USB 2.0 MINI 5P Male SHELL:Nickel PIN:G/F Insulator color: Black

RoHS compliant
Unit: mm

Scale	FREE					Date	Name	Customer-No.
TOLERANCE					Drawn	09.05.2014	Amy	
					Approved	09.05.2014	Amy	ASSMANN WSW-No. AK672M/2-x-GR-R
DIM	TOL							Drawing-No. ASS 7132 CA rev00
		⓪	Drawn	09.05.2014	Amy			
Angle	TOL	Id.	Modification	Date	Name			Replace Sheet

ASSMANN wsw components