DO NOT SCALE
DIMENSIONS IN mm

METRIC

THIRD ANGLE PROJECTION

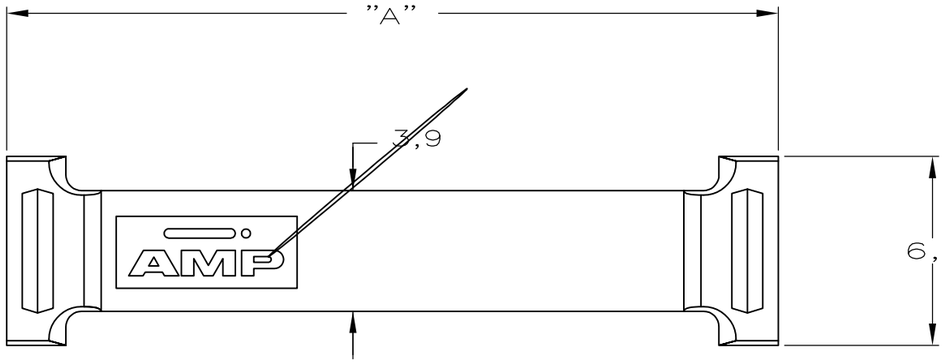

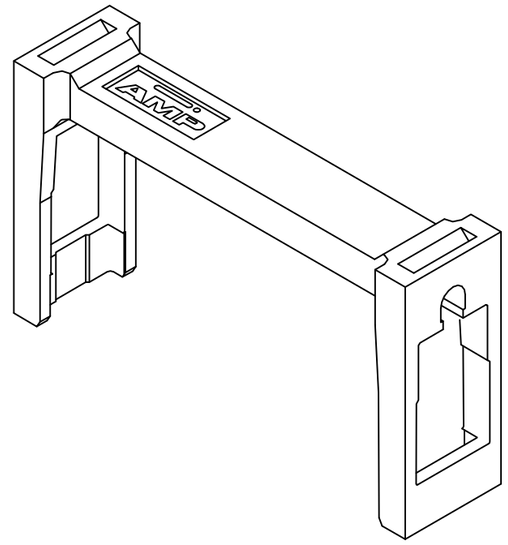

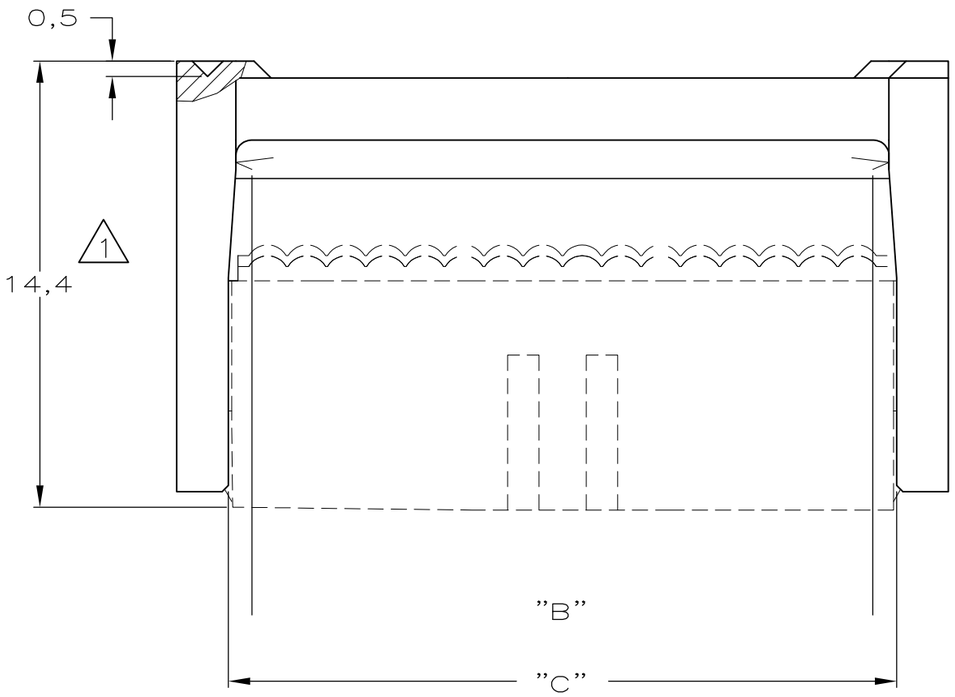

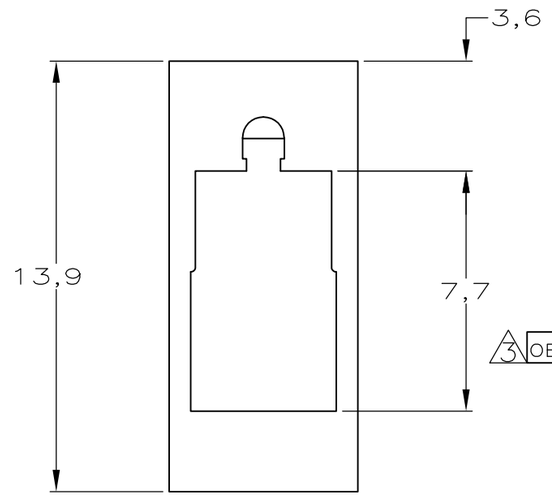

64	32	85,88	82,07	82,64	6-100103-4
60	30	80,80	76,99	77,56	6-100103-0
50	25	68,10	64,29	64,86	5-100103-0
44	22	60,48	56,67	57,24	4-100103-4
40	20	55,40	51,59	52,16	4-100103-0
34	17	47,78	43,97	44,54	3-100103-4
30	15	42,70	38,89	39,46	3-100103-0
26	13	37,62	33,81	34,38	2-100103-6
20	10	30,00	26,19	26,76	2-100103-0
16	8	24,92	21,11	21,68	1-100103-6
14	7	22,38	18,57	19,14	1-100103-4
10	5	17,30	13,49	14,06	1-100103-0
NR. OF CABLE POS.	NR. OF DUAL POS.	A	B	C	PARTNUMBER

3 OBSOLETE

GREY RAL 7032	GLASSFILLED NYLON
COLOR	MATERIAL

NOTES:

1. ASSEMBLED WITH AMP-LATCH MIL-TYPE RECEPT. CONN. (SYMMETRIC COVER)
2. 250 PIECES PACKED IN A PLASTIC BAG.
3. OBSOLETE PARTS: OBSOLETE CIS STREAMLINING PER D.RENAUD/D.SINISI

LTR.	REVISION RECORD	DR.	CHK.	DATE
—	—	-	-	-
—	—	-	-	-
—	—	-	-	-
—	—	-	-	-
—	—	-	-	-
C2	REVISED PER ECO-11-005140	RK	HMR	05APR11

CUSTOMER DRAWING — FOR REFERENCE ONLY WILL NOT BE UPDATED

© COPYRIGHT 19 - BY
ALL INTERNATIONAL RIGHTS RESERVED.

THIS DRAWING IS UNPUBLISHED
~~RELEASED FOR PUBLICATION - ,19 -~~

TE Connectivity

NAME
AMP-LATCH MIL-TYPE RECEPT. CONN. STRAIN-RELIEF.

DR.: R.HOGEVEEN.	CHK.: R.VERSTIJNEN.	APP.: L.V.SOEST.
DATE: 06-08-90	DATE: 08-08-90	DATE: 23-08-90

DWG.No. 100103 | REV.LTR. C2 | SHEET 1 OF 1 | A3

R6-128 (REV.04-91)