CASE FINISH	CURRENT (AMPS)	WORKING VOLTAGE				MAXIMUM DC RESISTANCE (OHMS)	MAXIMUM VOLTAGE DROP		MINIMUM CAPACITANCE (uF)	MIN. INSERTION LOSS PER MIL-STD-220, FULL LOAD, +25°C												
		-55°C TO +85°C		-55°C TO +125°C																		
		AC	DC	AC	DC		DC	AC		14 KHz	30 KHz	50 KHz	75 KHz	100 KHz	150 KHz	300 KHz	500 KHz	1 MHz	10 MHz	100 MHz	1 GHz	10 GHz
SOLDER	1	240(400Hz)	450	240(400Hz)	300	0.25	0.25	--	----	--	--	--	--	23	--	54	--	80	80	--	80	--

PART MARKING:

SCI
9011-100-1008
DATE CODE

PACKAGE MARKING:

STANDARD

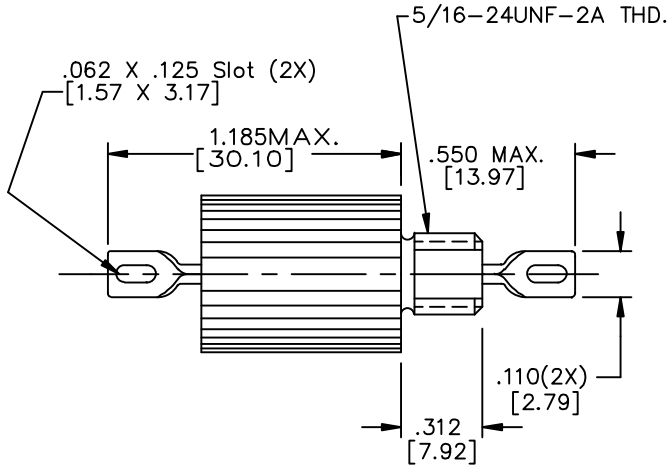

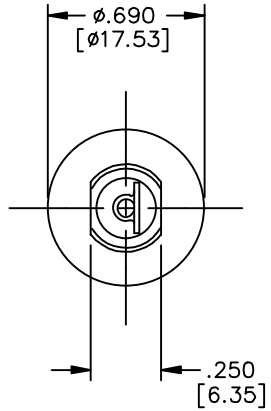

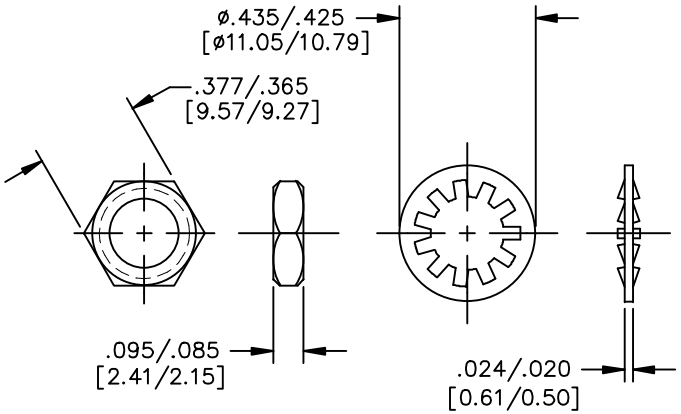

SCHEMATIC

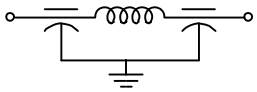

MTG. HARDWARE

MARKING NOTES:

N/A

NOTES:

1) MOUNTING TORQUE NOT TO EXCEED 7in-lbs.

CN. 183705	03	REV. NO.	UNLESS OTHERWISE SPECIFIED DIMENSIONS ARE IN INCHES. [MILLIMETERS] DO NOT SCALE.	TOLERANCES UNLESS OTHERWISE SPECIFIED Fractions ± Dec. .xx± Dec. .xxx± .010 Angles ±0° 30′	SPECTRUM CONTROL INC. ERIE, FAIRVIEW PENNSYLVANIA
		CHANGE NOTICE		CODE IDENT. NO. 0LSP2	Dwn. MAYNARD Ckd. 3/5/98 Sheet 1 of 1
					Description Low Pass EMI Filter 9011-100-1008

Quality Products From The Specialists In Electro-Magnetic Compatibility