REV	
NC	HDP26-18-*P/S*-L017

REVISIONS			
SYM	DESCRIPTION	DATE	APPROVED
NC	NEW RELEASE PER E.O. P18277	9-3-03	RDR

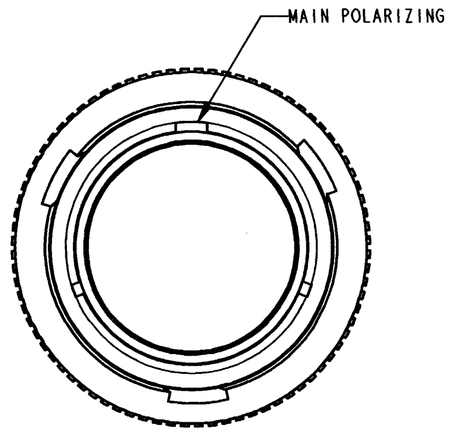

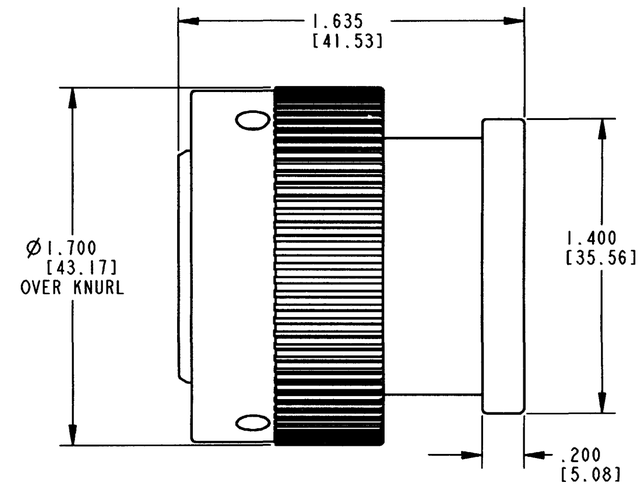

8. FOR PERFORMANCE AND APPLICATION CHARACTERISTICS SEE ENVELOPE DRAWING 0425-021-0000.

7. THIS PLUG MATES WITH HDP24-18-**P/S*-**** (**** = ALL MODIFICATIONS)

6. DIMENSION TOLERANCES ARE ±.025[0.63] UNLESS NOTED OTHERWISE.

5. FOR CONTACTS AND WIRE PERFORMANCE AND APPLICATION CHARACTERISTICS SEE ENVELOPE DWG. 0425-015-0000.

4. ALL DIMENSIONS ARE INCHES [MILLIMETERS].

3. RECOMMENDED PANEL THICKNESS: .062[1.57] TO .1875[4.76] MAX.

2. BACK SHELL ADAPTER COLOR REFLECTS WIRE SEAL DIAMETER. (GREEN = 'N' SEAL; GREY = 'T' SEAL; BLUE = 'E' SEAL).

NOTES: 1. FOR CONTACTS ARRANGEMENTS, SEE ENVELOPE DRAWING 0425-013-1800.

	SIGNATURE & DATE
DR	X. SANCHEZ 13AUG03
CHK	J. Apostol 9/2/03
PE	A. Polinski 8/18/03
APPD	S Beard 8-18-03
SCALE NONE	WT ———

PLUG CONNECTOR
BAYONET COUPLING
HDP SERIES
-L017 MOD

ENVELOPE

CP | MATL. CODE

The Deutsch Company
DEUTSCH I.P.D.
3850 INDUSTRIAL AVE.
HEMET, CALIF. 92545

B | HDP26-18-*P/S*-L017
DWG SIZE | CODE 11139 | SHEET 1 OF 1