This document was generated on 07/30/2015

PLEASE CHECK WWW.MOLEX.COM FOR LATEST PART INFORMATION

Part Number: 5016471000

Status: Active

Overview: iGrid™ Wire-to-Board Dual-Row System

Description: 2.00mm Pitch iGrid™ Wire-to-Board Crimp Terminal, Female, 22-26 AWG, Reel

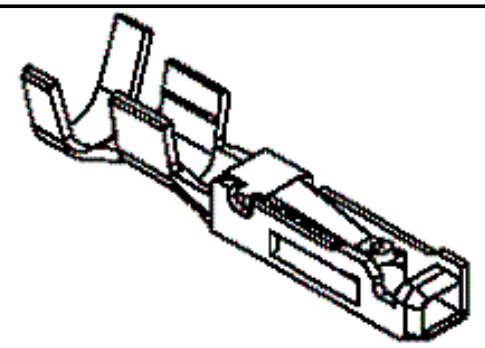

Series image - Reference only

Documents:

3D Model
Drawing (PDF)
Product Specification PS-501646-001 (PDF)
RoHS Certificate of Compliance (PDF)

General	
Product Family	Crimp Terminals
Series	501647
Application	Signal
Crimp Quality Equipment	Yes
Overview	iGrid™ Wire-to-Board Dual-Row System
Packaging Alternative	501647-1100 (Loose)
Product Name	iGrid™
UPC	822350087308
Physical	
Durability (mating cycles max)	30
Gender	Female
Material - Metal	Copper Alloy
Material - Plating Mating	Tin
Net Weight	76.000/mg
Packaging Type	Reel
Termination Interface: Style	Crimp or Compression
Wire Insulation Diameter	0.95-1.50mm
Wire Size AWG	22, 24, 26
Wire Size mm²	0.124-0.34
Electrical	
Current - Maximum per Contact	2.0A
Voltage - Maximum	250V AC (RMS)/DC
Material Info	
Reference - Drawing Numbers	
Crimp Specification	CS-501647-001
Product Specification	PS-501646-001, RPS-501646-001, RPS-501646-002, RPS-501646-003, RPS-501646-004, RPS-501646-005, RPS-501646-006, RPS-501646-007, RPS-501646-008, RPS-501646-011, RPS-501646-012, RPS-501646-013, RPS-501646-015, RPS-501646-017, RPS-501646-018
Sales Drawing	SD-501647-001

EU ELV
Not Relevant

EU RoHS
Compliant

China RoHS

REACH SVHC
Contains SVHC(2014 December 17): No

Halogen-Free Status
Low-Halogen

Need more information on product environmental compliance?

Email productcompliance@molex.com
Please visit the Contact Us section for any non-product compliance questions.

China ROHS	Green Image
ELV	Not Relevant

Search Parts in this Series
501647 Series

Mates With
501645 Vertical Header . 501676 Right Angle Header

Use With
501646 Receptacle Housing

Application Tooling | **FAQ**

Tooling specifications and manuals are found by selecting the products below. Crimp Height Specifications are then contained in the Application Tooling Specification document.

Global

Description	Product #
FineAdjust™ Applicator	0638687000

Hand Crimp Tool for 2.00mm Pitch Wire-to-Board Terminals	0638192300
Manual Extraction Tool	0638131500
T2 Terminator Tooling Die	0638587000

Japan

Description	Product #
Applicator for M211A Bench Press, 22-26 AWG Wire	5780213000
Side-Feed Applicator for Fully-Auto Machine, 22-26 AWG Wire	5780213200