multimec®

Rocker-action pushbutton caps

5G + 1A/1H/1M/1ZA

- Rectangular caps
- Rocker-action pushbutton cap
- 12.5 mm x 10.1 mm; 18.65 mm x 10.1 mm; 25.0 mm x 10.1 mm
- h =12.2 mm
- Material: ABS/polycarbonate
- Temp. Range:
  - Solid cap: -40/+65°C
  - Transparent cap: -40/+85°C
- Panel cut-out: 1A/1H-13.0 x 10.5, 1M-25.7 x 10.5, 1ZA-19.4x10.5

All dimensions in mm *Tolerances -/+0.2mm*

DIMENSIONS

SMD w/LED + 1A

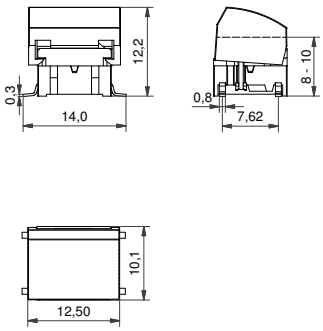

TH w/LED + 1H

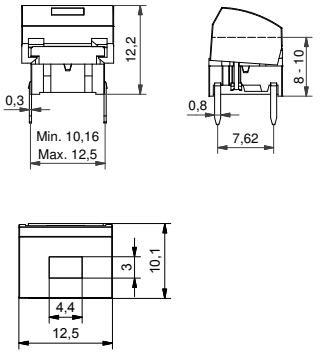

TH + 1ZA

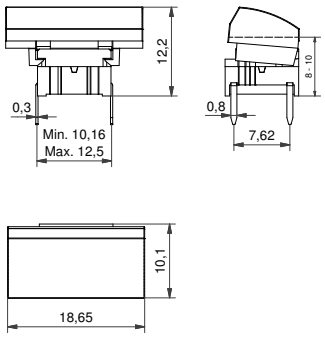

SMD + 1M

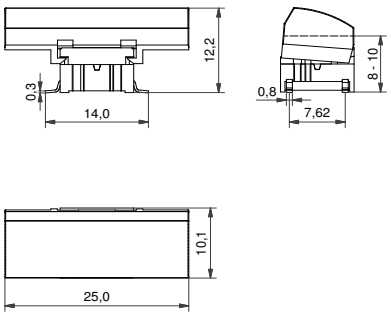

ILLUMINATED – HOW TO ORDER

Switch	Mounting	Actuation force	LED		Cap	Colour code 1H	Lens 1H
5 G				+			
	TH9 through-hole	**20**	**01** blue		**1H**	**03** grey	**1** transparent
	SH9 surface mount	**35**	**22** green			**09** black	**2** green
		65	**42** yellow				**4** yellow
		Q*	**61** white		**1A**	Colour code 1A	**6** frosted white
			82 red			**16** frosted white	**8** red
			2242 green/yellow				
			8222 red/green				
			8242 red/yellow				

*For an illuminated quiet 2.0N switch add Q to the end of the switch part number.

NON-ILLUMINATED– HOW TO ORDER

Switch	Mounting	Actuation force		Cap	Colour code 1A/1M	
5 G			+			Colours 1ZA:
	TH9 through-hole	**20**		**1A**	**00** blue	**03** grey
	SH9 surface mount	**20Q**			**02** green	**06** white
		35			**03** grey	**09** black
		65		**1ZA**	**04** yellow	**30** ultra blue
					06 white	**40** dusty blue
					08 red	**42** aqua blue
				1M	**09** black	**50** metal dark blue
						53 metal light grey
						57 metal dark grey
						58 metal bordeaux

Ordering example:
5GSH93582 + 1H098 with illumination OR 5GTH965 + 1ZA57 without illumination OR *5GTH92001Q (illuminated quiet version).
Please see colour codes, updates of products and changes of specifications on www.mec.dk