REVISIONS FOR DWG # 1PB–2APx				
REV	CH.NO.	DESCRIPTION	DATE	REVISED BY
–	–	ORIGINAL DESIGN	09/14/07	Phil E.

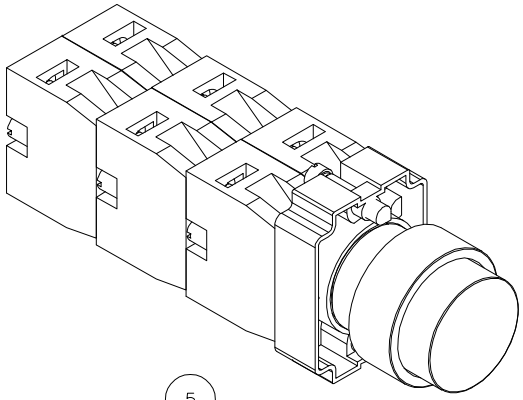

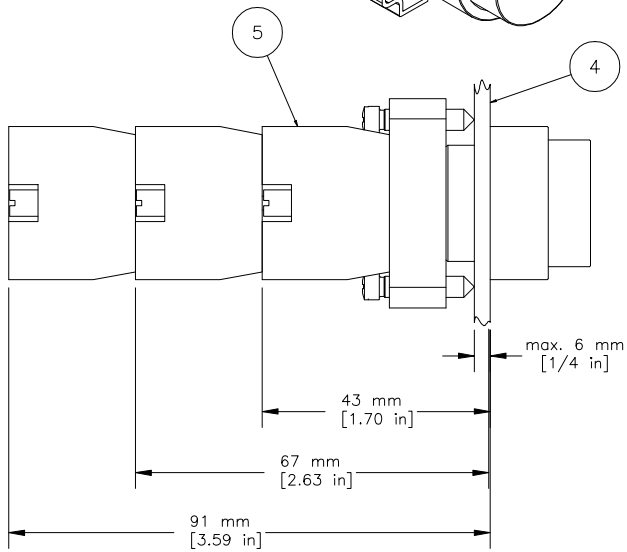

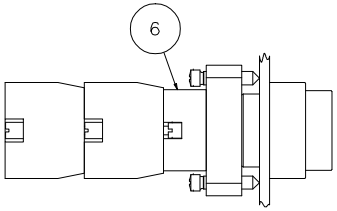

Shown with
Push–Push mechanism

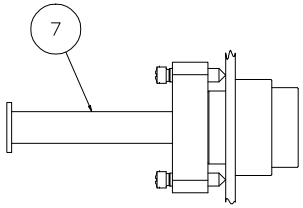

Shown with
Remote attachment

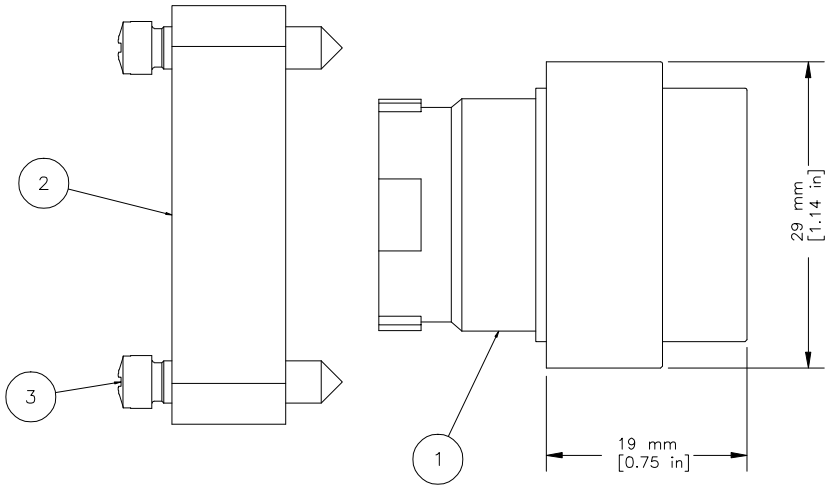

ITEM	DESCRIPTION	CAT. NO.	COLOR	MIN. QTY.	MAX. QTY.
1	Projecting Operator (comes with mounting bracket 2BRK)	2AP1	White	1	1
		2AP2	Black	1	1
		2AP3	Green	1	1
		2AP4	Red	1	1
		2AP6	Blue	1	1
		2AP8	Yellow	1	1
2	Mounting Bracket	2BRK	-	1	1
3	Mounting Bracket Screws	incl. in 2BRK	-	2	2
4	Panel	-	-	-	-
5	Switch Contacts	S1	Green	1	6
		S2	Red	1	6
		S3	Green/Gray	1	6
		S4	Red/Gray	1	6
6	Maintained Action Block	2PPM	Black	1	1
7	Remote Attachment	Add Suffix "RR"	-	1	1

UNLESS OTHERWISE SPECIFIED
- ALL DIMENSIONS ARE IN MILLIMETERS
- THIRD ANGLE PROJECTION

- TOLERANCE

XX	≙	±1 mm
XX.X	≙	±0.5 mm
XX.XX	≙	±0.2 mm
ALL	≙	– mm

METRIC

This Drawing is the property of
Altech Corp®
35 Royal Road
Flemington NJ 08822–6000
(908) 806–9400 · Fax (908) 806–9490

AND IS A CONFIDENTIAL DISCLOSURE LENT WITHOUT CONSIDERATION OTHER THAN THE BORROWER'S AGREEMENT THAT IT SHALL NOT BE REPRODUCED, COPIED, LENT, OR DISPOSED OF DIRECTLY OR INDIRECTLY NOR USED FOR ANY PURPOSE OTHER THAN THAT FOR WHICH IT IS SPECIFICALLY FURNISHED.

TITLE: 22 mm Non–Illuminated Projecting Metal Operator 2APx (x=color)

DRAWN BY: Philipp Ernstberger	09/14/07	DRAWING NO.: 1PB–2APx	REV.: –
CHECKED BY: Laszlo Gyorgypal	09/14/07		
RELEASED BY: Laszlo Gyorgypal	09/14/07	SCALE: –	SHEET: 1 OF: 1