MICRO SWITCH
a Honeywell Division
FED.MFG.CODE 91929

LEVER - SWITCH ACTUATOR

CATALOG LISTING
LSZ69CA

THIS DRAWING COVERS A PROPRIETARY ITEM AND IS THE PROPERTY OF MICRO SWITCH, A DIVISION OF HONEYWELL. THIS DRAWING IS NOT TO BE COPIED OR USED WITHOUT THE APPROVAL OF MICRO SWITCH.

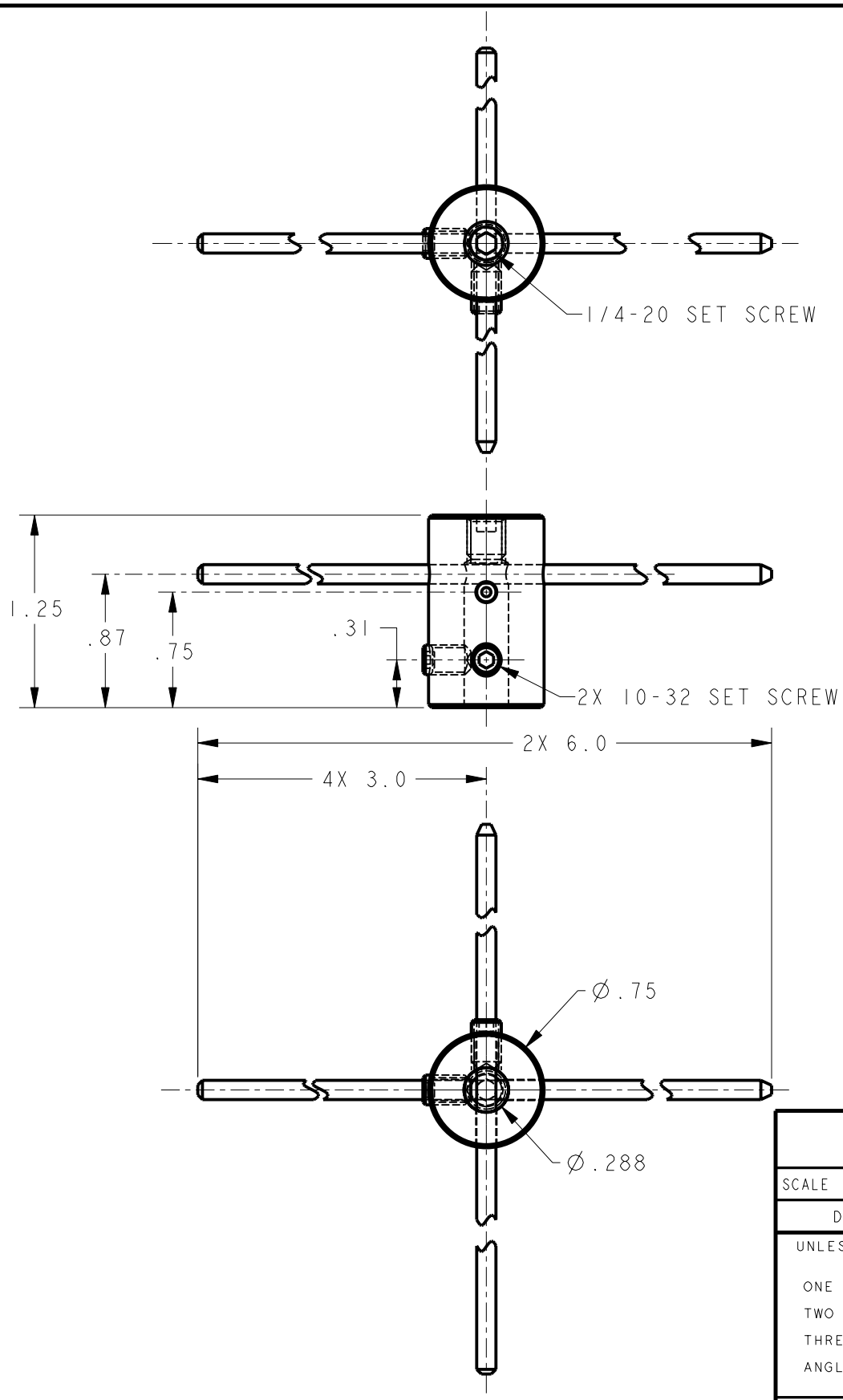

THIRD ANGLE PROJECTION

SCALE FULL

DO NOT SCALE PRINT

UNLESS OTHERWISE SPECIFIED TOLERANCES ARE

ONE PLACE	(.0)	±.030
TWO PLACE	(.00)	±.015
THREE PLACE	(.000)	±.005
ANGLES		±

WEIGHT

ANSI Y14.5M-1982 APPLIES

LSZ69CA
CATALOG LISTING
PAGE 1 OF 1
ISSUE 1
REPLACES
RELEASE NO. PR-24363
CHECK
REVISIONS
CHECK
27 DEC 99
SAV
CHECK
27 DEC 99
GRT
DRAWN
PTC/CAD 3D