THIS DRAWING IS UNPUBLISHED. RELEASED FOR PUBLICATION –,– .
© COPYRIGHT – BY TYCO ELECTRONICS CORPORATION. ALL INTERNATIONAL RIGHTS RESERVED.

LOC	DIST
—	—

REVISIONS

P	LTR	DESCRIPTION	DATE	DWN	APVD
	A2	REVISED PER ECO–08–031020	12/11/08	SS	CR

MATERIAL:
BLADE: TIN PLATED, COPPER ALLOY.
HOUSING HANDLE: PA66, UL94V–0.

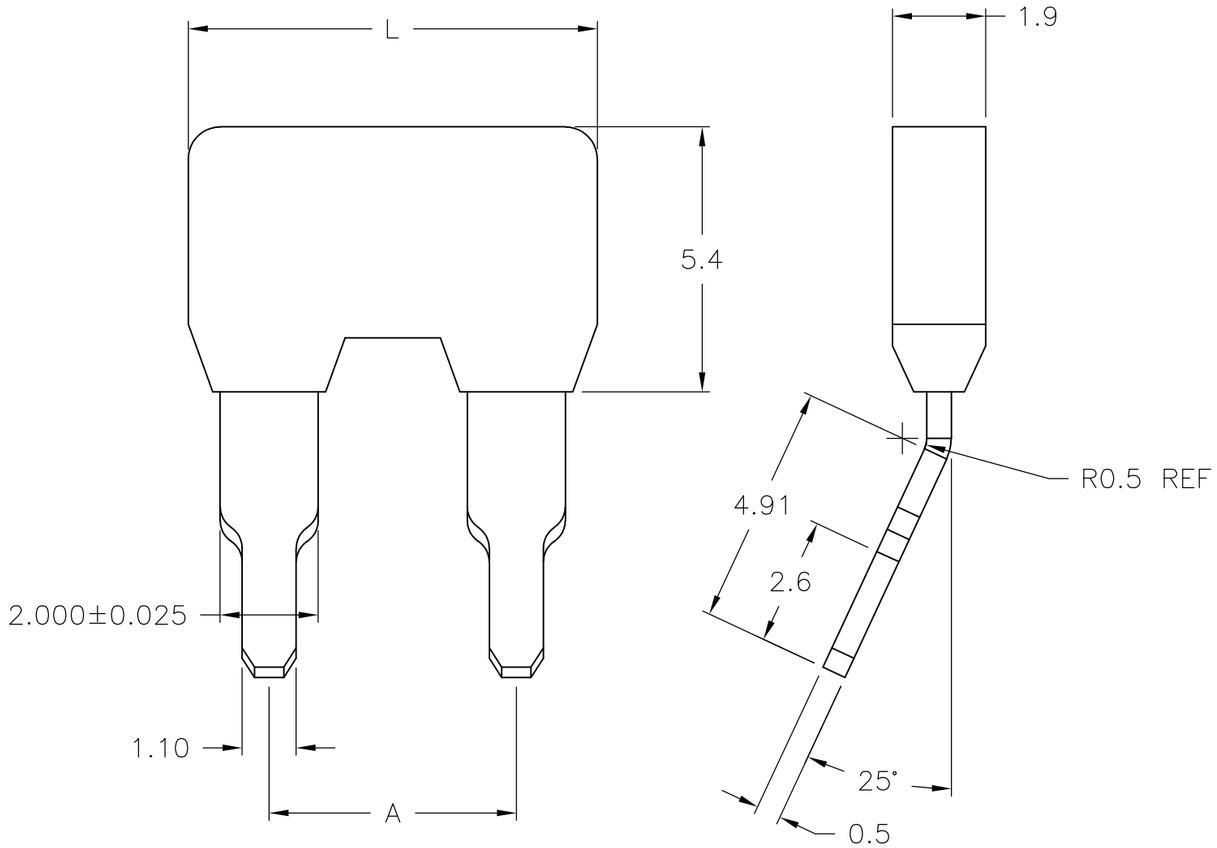

DIM L	DIM A	NO OF POS	PART NUMBER
38.58	35.28	8	1776957–8
33.54	30.24	7	1776957–7
28.50	25.20	6	1776957–6
23.46	20.16	5	1776957–5
18.42	15.12	4	1776957–4
13.38	10.08	3	1776957–3
8.34	5.04	2	1776957–2

THIS DRAWING IS A CONTROLLED DOCUMENT.

DIMENSIONS: mm

TOLERANCES UNLESS OTHERWISE SPECIFIED:

0 PLC	± –
1 PLC	± 0.3
2 PLC	± 0.25
3 PLC	± –
4 PLC	± –
ANGLES	± 2°

MATERIAL –

FINISH –

DWN S SCHLEGEL 06FEB2008
CHK C RICHARD 2/6/08
APVD C RICHARD 2/6/08
PRODUCT SPEC —
APPLICATION SPEC —
WEIGHT —

Tyco Electronics
Tyco Electronics Corporation
Harrisburg, PA 17105–3608

NAME
JUMER FOR TERMINAL BLOCK
5.0mm THRU 5.08mm PITCH
–

SIZE	CAGE CODE	DRAWING NO	RESTRICTED TO
A3	00779	C–1776957	—

CUSTOMER DRAWING

SCALE	SHEET	REV
8:1	1 OF 1	A2