CDBMTS240-HF Thru. CDBMTS2200-HF

Reverse Voltage: 40 to 200 Volts
Forward Current: 2.0 Amp
RoHS Device
Halogen Free

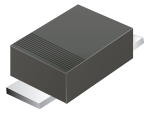

Features

- -Excellent power dissipation offers better reverse leakage current and thermal resistance.
- -Low profile surface mounted application in order to optimize board space.
- -Low power loss, high efficiency.
- -High current capability, low forward voltage drop.
- -High surge capability.
- -Guarding for overvoltage protection.
- -Ultra high-speed switching.
- -Silicon epitaxial planar chip, metal silicon junction.
- -Lead-free part meets environmental standards of MIL-STD-19500/228

Mechanical data

- -Epoxy: UL94V-0 rated flame retardant.
- -Case: Molded plastic, SOD-123S/MINI SMA
- -Terminals: Solderable per MIL-STD-750, Method 2026.
- -Polarity: Indicated by cathode band.
- -Mounting Position: any
- -Weight: 0.0155 grams approx.

SOD-123S

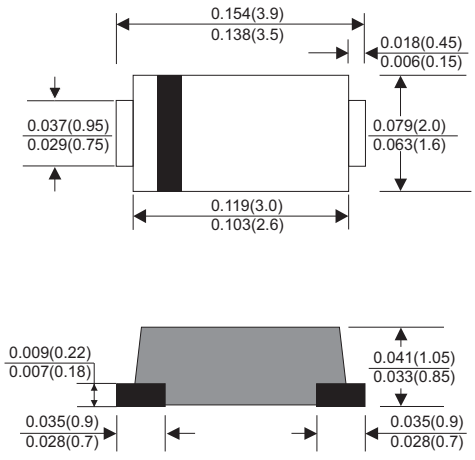

Dimensions in inches and (millimeter)

Maximum Ratings and Electrical Characteristics (at T_A=25°C unless otherwise noted)

Parameter		Symbol	CDBMTS 240-HF	CDBMTS 260-HF	CDBMTS 2100-HF	CDBMTS 2150-HF	CDBMTS 2200-HF	Unit
Repetitive peak reverse voltage		V_{RRM}	40	60	100	150	200	V
Continuous reverse voltage		V_R	40	60	100	105	140	V
RMS voltage		V_{RMS}	28	42	70	150	200	V
Maximum Forward rectified current		I_O	2.0					A
Maximum forward voltage @ I_F=2.0A		V_F	0.50	0.70	0.85	0.90	0.92	V
Maximum forward surge current 8.3ms single half sine-wave superimposed on rated load (JEDEC methode)		I_{FSM}	50					A
Maximum reverse Current (V_R=V_{RRM})	T_J=25°C	I_R	0.5					mA
	T_J=100°C		20					
Typical diode Junction capacitance (F=1MHz and applied 4V DC reverse voltage)		C_J	160					pF
Operating temperature		T_J	-55 to +125	-55 to +150				°C
Storage temperature range		T_{STG}	-65 to +175					°C

Company reserves the right to improve product design , functions and reliability without notice.

REV: B

Rating and Characteristic Curves (CDBMTS240-HF Thru. CDBMTS2200-HF)

Fig.1 - Typical Forward Current Derating Curve

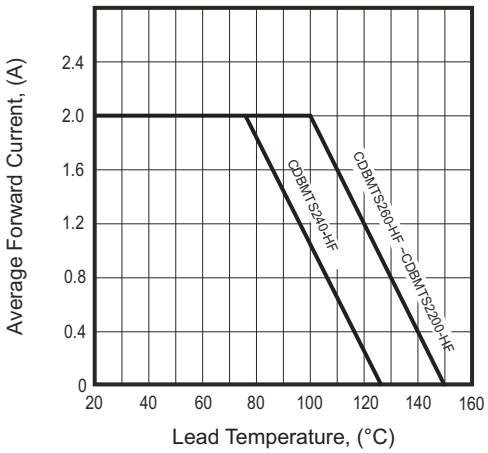

Fig.2 - Typical Forward Characteristics

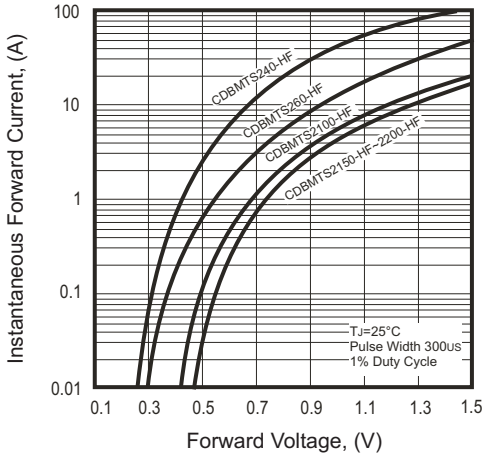

Fig.3 - Maximum Non-repetitive Forward Surge Current

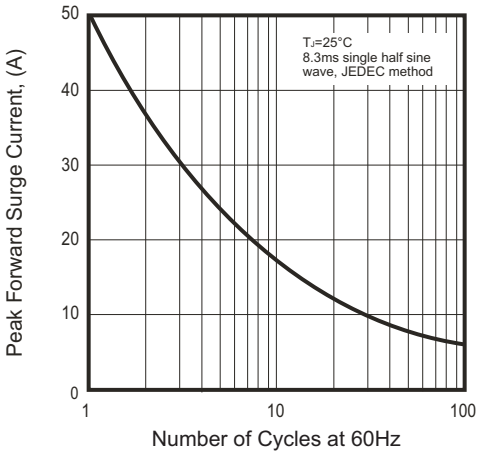

Fig.4 - Typical Junction Capacitance

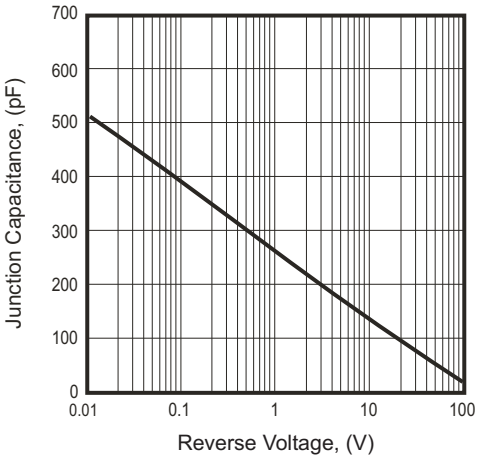

Fig.5 - Typical Reverse Characteristics

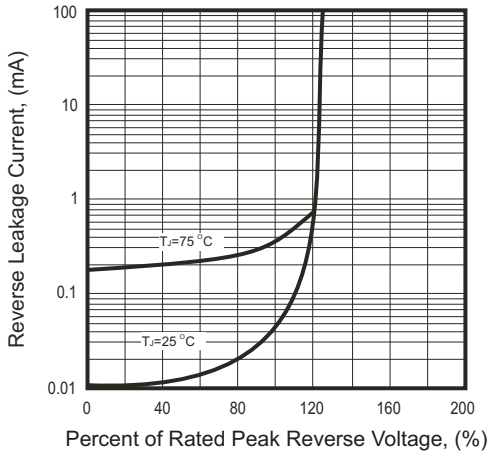

Reel Taping Specification

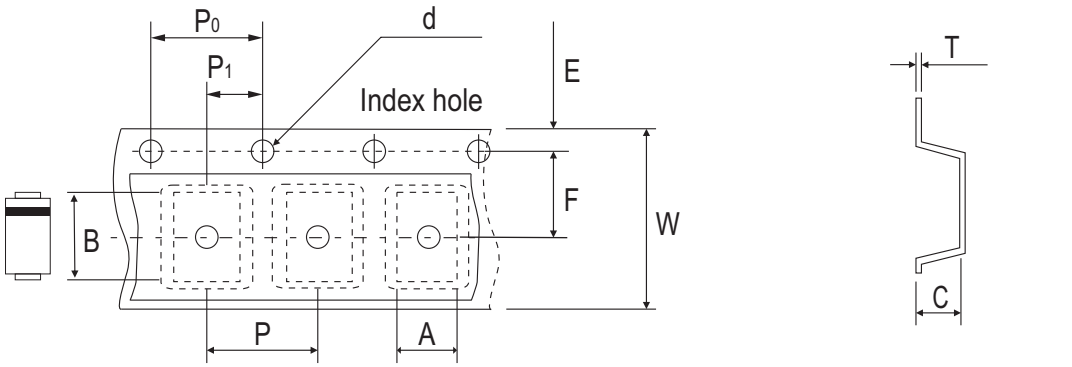

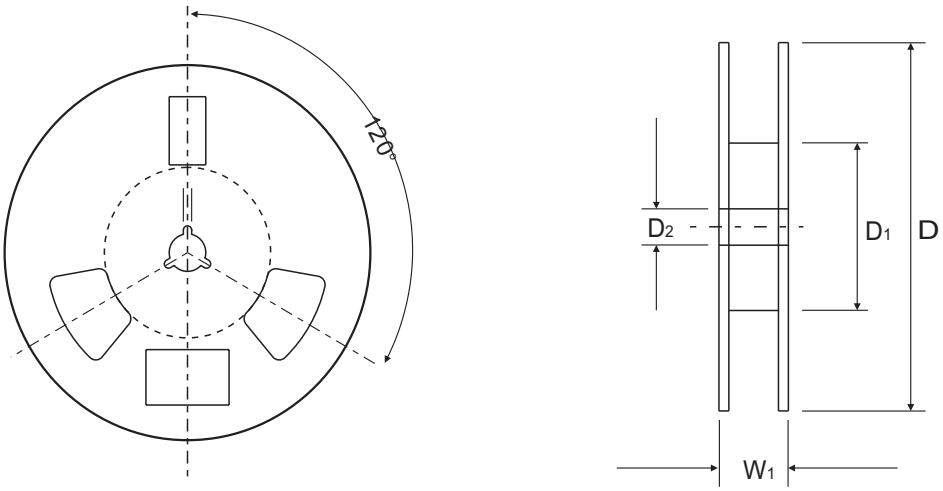

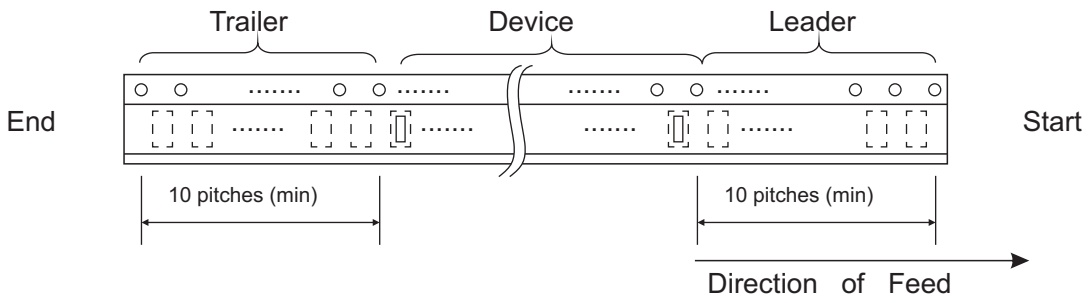

	SYMBOL	A	B	C	d	D	D1	D2
SOD-123S	(mm)	2.00 ± 0.10	3.85 ± 0.10	1.10 ± 0.10	1.50 ± 0.10	178 ± 2.00	62.0 MIN.	13.0 ± 0.50
	(inch)	0.079 ± 0.004	0.152 ± 0.004	0.043 ± 0.004	0.059 ± 0.004	7.00 ± 0.079	2.440 MIN.	0.512 ± 0.020

	SYMBOL	E	F	P	P0	P1	T	W	W1
SOD-123S	(mm)	1.75 ± 0.10	3.50 ± 0.10	4.00 ± 0.10	4.00 ± 0.10	2.00 ± 0.10	0.23 ± 0.10	8.00 ± 0.30	11.40 ± 1.0
	(inch)	0.069 ± 0.004	0.138 ± 0.004	0.157 ± 0.004	0.157 ± 0.004	0.079 ± 0.004	0.009 ± 0.004	0.315 ± 0.012	0.449 ± 0.039

Pinning information

Pin	Simplified outline	Symbol
PIN 1 Cathode PIN 2 Anode		

Marking Code

Part Number	Marking Code
CDBMTS240-HF	24
CDBMTS260-HF	26
CDBMTS280-HF	28
CDBMTS2100-HF	20
CDBMTS2150-HF	215
CDBMTS2200-HF	220

xx / xxx = Product type marking code

Suggested PAD Layout

SIZE	SOD-123S	
	(mm)	(inch)
A	3.00	0.118
B	1.00	0.039
C	1.10	0.043
D	4.00	0.157
E	2.00	0.079

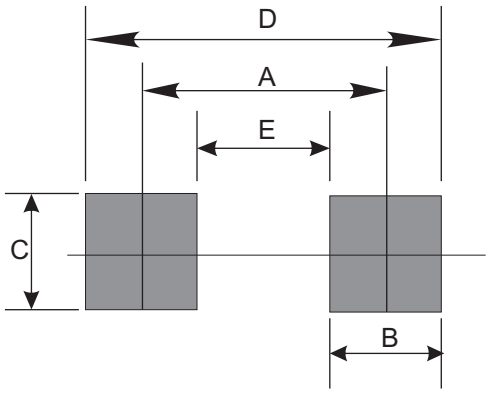

Standard Packaging

Case Type	REEL PACK	
	REEL (pcs)	Reel Size (inch)
SOD-123S	3,000	7