THIS DRAWING IS UNPUBLISHED. RELEASED FOR PUBLICATION -.- .
© COPYRIGHT - BY TYCO ELECTRONICS CORPORATION. ALL RIGHTS RESERVED.

LOC	DIST
—	—

REVISIONS

P	LTR	DESCRIPTION	DATE	DWN	APVD
	S	REV PER ECO-08-019991	22OCT08	PK	BW

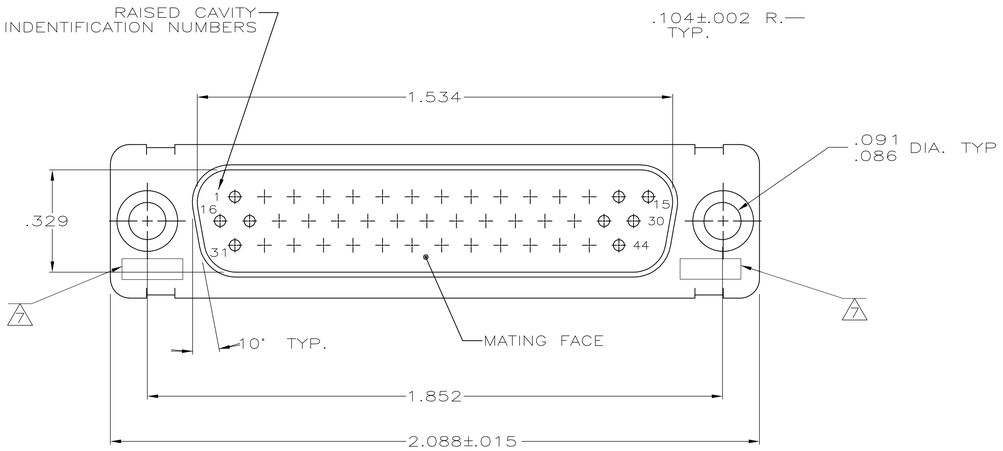

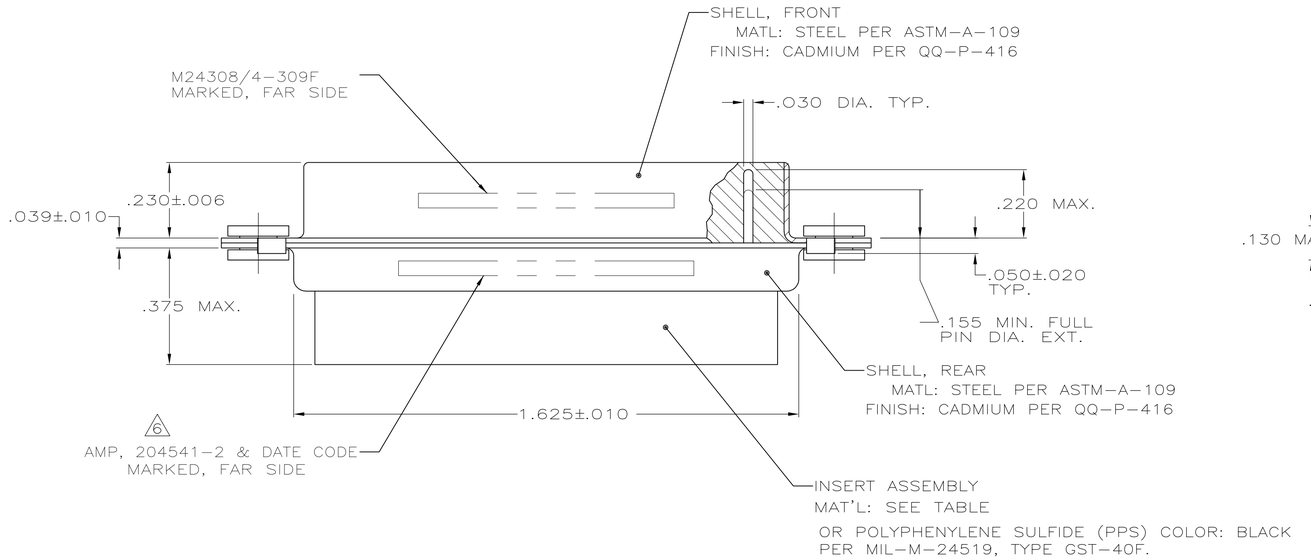

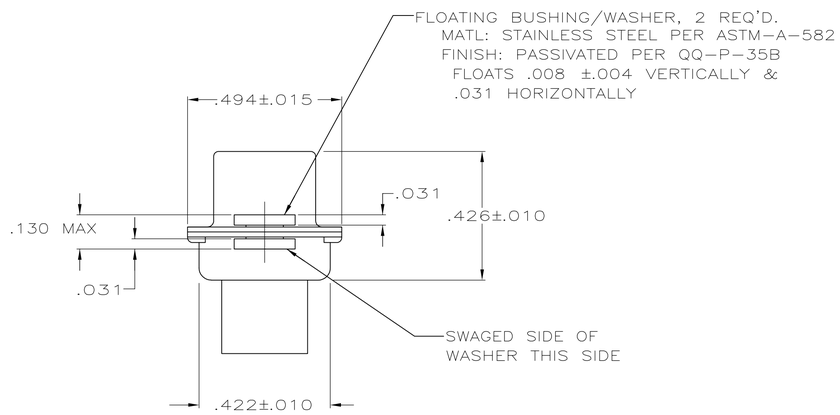

1. THIS PLUG IS DESIGNED TO CONFORM TO THE LATEST ISSUE OF MIL-C-24308
2. MAX WIRE INSUL. TO BE USED WITH THIS PLUG IS .054 DIA.
3. METAL RETENTION CLIPS ARE INCLUDED IN INSERTS
4. PACKAGE MARKED M 24308/4-331F
5. THIS PLUG WILL ACCEPT SIZE 22 PIN CONTACT M 24308/13 OR AMP # 204370

6 AMP PART NO. MARKED ON CONNECTOR REPRESENTS KIT NUMBER WITH CONTACTS

7 UL/CSA DESIGNATION MARKED IN THIS AREA.

OBSOLETE	PHENOLIC, COLOR: BLACK	204529-2
	POLYPHENELYENE SULFIDE (PPS) GST-40F PER MIL-M-24519 OR GLASS FILLED POLYESTER TPES013G30 PER ASTM D5927 COLOR, BLACK	204529-1
	INSERT MATERIAL	PART NO.

THIS DRAWING IS A CONTROLLED DOCUMENT.

DIMENSIONS: INCHES

TOLERANCES UNLESS OTHERWISE SPECIFIED:
0 PLC ± –
1 PLC ± –
2 PLC ± –
3 PLC ± .005
4 PLC ± –
ANGLES ± –

MATERIAL: SEE CALLOUTS
FINISH: SEE CALLOUTS

DWN C.C.THOMAS 12-3-87
CHK F.C. BALLEW 1-25-88
APVD DJM 1-25-88
PRODUCT SPEC —
APPLICATION SPEC —
WEIGHT —

Tyco Electronics
Tyco Electronics Corporation
Harrisburg, PA 17105-3608

NAME: AMPLIMITE PLUG FOR PIN CONTACTS HI-DENSITY D CONN, SIZE 3, SERIES 90 WITH FLOAT BUSHINGS

SIZE	CAGE CODE	DRAWING NO	RESTRICTED TO
A1	00779	C-204529	—

CUSTOMER DRAWING | SCALE 4:1 | SHEET 1 OF 1 | REV S