ASSEMBLY NUMBER	PT NO. REF
71-534895-()	07C-14-()

CONTACTS		
SIZE	PART NO.	B ±.001
20 PIN	10-497512-1F	.030
20 SOCKET	10-497513-1F	.030

ACCESSORIES
(NOT PART OF STANDARD ASSEMBLY)

SEE DRAWING 10-150000

59500-189

REVISIONS				
ZONE	LTR	DESCRIPTION	DATE	APPROVED
	A			
	B	(CL II) WAS 10-195927-201 (PIN) 10-195928-201 (SOCKET) (CONTACT BLK) ECN: 20387-11	6-29-88 D. McElligott	Nesbit K

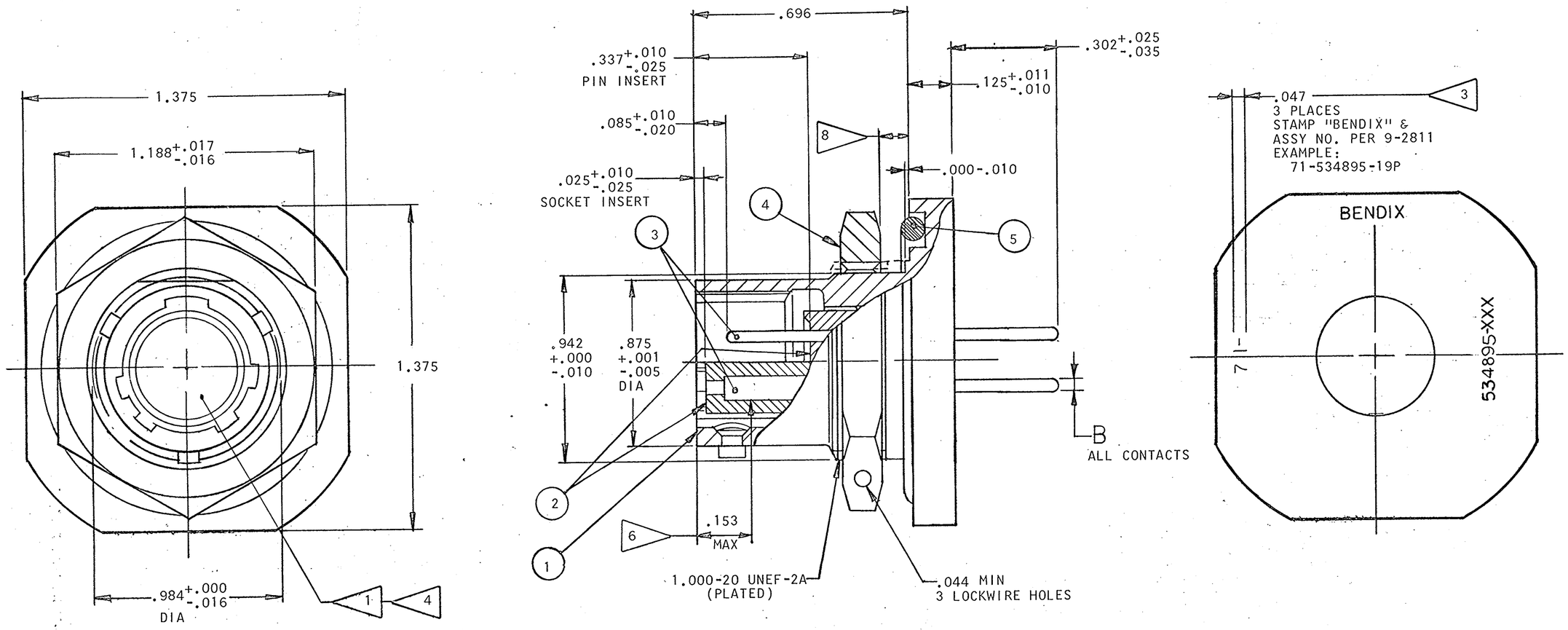

10. UNITS ILLUSTRATED MEET THE MATERIAL & FINISH REQUIREMENTS OF MIL-C-26482.
9. FOR MAXIMUM SEALING EFFICIENCY, APPLY A LIGHT COAT OF COMPOUND MIL-S-8660 TO PACKING.
8. PANEL THICKNESS: .062 MIN, .125 MAX.
7. FOR REQUIRED MATING PLUG ASSEMBLY, SEE DRAWING 71-147606/50 & OTHERS.
6. DISTANCE BETWEEN END OF SHELL & THE POINT AT WHICH A GAGE PIN, HAVING THE SAME BASIC DIAMETER AS THE MATING CONTACT & A SQUARE FACE, ENGAGES SOCKET CONTACT SPRING.
5. SEE SEPARATE PARTS LIST FOR COMPONENT PART NUMBERS & QUANTITIES.
4. INSERTS & CONTACTS MUST NOT BE REMOVED.
3. SEE WORK ORDER FOR PERMISSIBLE ADDITIONAL OR ALTERNATE STAMPING.
2. TO COMPLETE ASSY NO. & PT NO. REF, ADD APPLICABLE INSERT ARRANGEMENT SUFFIX TO BASE NUMBERS LISTED ABOVE PER 9-2437-1.
1. FOR CONTACT ARRANGEMENTS, SEE DRAWING L-15214-().

NOTES:

FIND NO.	QTY REQD	CODE IDENT	PART NUMBER	DESCRIPTION	NOTE REF
5	1		10-90351-24	PACKING	9
4	1		10-123017-143	NUT	
3	SEE NOTE 5		SEE COLUMN	CONTACTS	
2	1		10-101814-()P OR	INSERT, PIN	
			10-101814-()S	INSERT, SOCKET	
1	1		10-150903-143	SHELL	

PARTS LIST

UNLESS OTHERWISE SPECIFIED
LINEAR DIMENSIONS ARE IN INCHES. TOLERANCES: .XXX ± .010, .XX ± .03, .X ± .1, ANGLES ± 2°. OTHER STANDARDS PER 9-3800 AND MIL-D-1000. NOTE REF

SIGNATURES		DATES
PREPARED	COLON	2/24/78
CHECKED	Keller	6-1-78
MATERIAL		
APPROVED	A. Harris	5-26-78
APPROVED	J. M. Donnay	6-2-78

MATERIAL SPEC

PROCESS SPEC
TEST
9-3980-1
ASSY
9-3605-1
9-2437-1
9-2811

The Bendix Corporation
Electrical Components Division
Sidney, New York

TITLE: CONNECTOR, ELECTRICAL RECEPTACLE, TYPE PT-C14JFB, OLIVE DRAB

SIZE	CODE IDENT NO.	
C	77820	71-534895

SCALE NONE | WT | REF 71-147706/50 | SHEET

NEXT ASSEMBLY

USE OF THIS DOCUMENT IS UNLIMITED. DOCUMENTS REFERENCED HEREON CONTAIN LIMITED RIGHTS DATA.

000000001

TAB.

IMAGED / May . 10 2004, 03:39 PM