Basler Cameras

PRODUCT LINE OVERVIEW

USB3 VISION BCON for LVDS BCON for MIPI GigE VISION CAMERA Link

BASLER
the power of sight

TECHNICAL DETAILS

Specifications are subject to change without notice.
Latest specifications and availability can be found on our *website www.baslerweb.com/products*. Please visit *www.baslerweb.com/manuals* for the detailed camera User's Manual and *www.baslerweb.com/thirdparty* for information on third party software.

Area Scan Cameras

Basler ace classic	Sensor	Resolution (H×V pixels)	Frame Rate [fps]	Mono/ Color	Bit Depth	Interface	Pixel Size [µm²]	Sensor Size [mm²]	Optical Size
acA640-90um/uc	ICX424	659×494	90	m/c	8/12	USB 3.0	7.4×7.4	4.88×3.66	1/3″
acA1300-30um/uc	ICX445	1296×966	30	m/c	8/12	USB 3.0	3.75×3.75	4.86×3.62	1/3″
acA1600-20um/uc	ICX274	1626×1236	20	m/c	8/12	USB 3.0	4.4×4.4	7.16×5.44	1/1.8″
acA1920-25um/uc	MT9P031	1920×1080	26	m/c	8/12	USB 3.0	2.2×2.2	4.22×2.38	1/3.7″
acA2000-165um/uc	CMV2000	2048×1088	165	m/c	8/12	USB 3.0	5.5×5.5	11.26×5.98	2/3″
acA2000-165umNIR	CMV2000	2048×1088	165	m	8/12	USB 3.0	5.5×5.5	11.26×5.98	2/3″
acA2040-90um/uc	CMV4000	2048×2048	90	m/c	8/12	USB 3.0	5.5×5.5	11.26×11.26	1″
acA2040-90umNIR	CMV4000	2048×2048	90	m	8/12	USB 3.0	5.5×5.5	11.26×11.26	1″
acA2500-14um/uc	MT9P031	2592×1944	14	m/c	8/12	USB 3.0	2.2×2.2	5.70×4.28	1/2.5″
acA3800-14um/uc	MT9J003	3840×2748	14	m/c	8/12	USB 3.0	1.67×1.67	6.44×4.62	1/2.3″
acA4600-10uc	MT9F002	4608×3288	10	c	8/12	USB 3.0	1.4×1.4	6.45×4.63	1/2.3″

Basler ace U	Sensor	Resolution (H×V pixels)	Frame Rate [fps]	Mono/ Color	Bit Depth	Interface	Pixel Size [µm²]	Sensor Size [mm²]	Optical Size
acA640-750um/uc	PYTHON 300	640×480	751	m/c	8/10	USB 3.0	4.8×4.8	3.07×2.30	1/4″
NEW acA720-520um/uc	IMX287	720×540	520	m/c	8/12	USB 3.0	6.9×6.9	4.97×3.73	1/2.9″
acA800-510um/uc	PYTHON 500	800×600	511	m/c	8/10	USB 3.0	4.8×4.8	3.84×2.88	1/3.6″
acA1300-200um/uc	PYTHON 1300	1280×1024	203	m/c	8/10	USB 3.0	4.8×4.8	6.14×4.92	1/2″
NEW acA1440-220um/uc	IMX273	1440×1080	220	m/c	8/12	USB 3.0	3.45×3.45	4.97×3.73	1/2.9″
acA1920-40um/uc	IMX249	1920×1200	41	m/c	8/12	USB 3.0	5.86×5.86	11.25×7.03	1/1.2″
acA1920-150um/uc	PYTHON 2000	1920×1200	150	m/c	8/10	USB 3.0	4.8×4.8	9.50×6.08	2/3″
acA1920-155um/uc	IMX174	1920×1200	164	m/c	8/12	USB 3.0	5.86×5.86	11.25×7.03	1/1.2″
acA2040-55um/uc	IMX265	2048×1536	55	m/c	8/12	USB 3.0	3.45×3.45	7.07×5.30	1/1.8″
acA2040-120um/uc	IMX252	2048×1536	120	m/c	8/12	USB 3.0	3.45×3.45	7.07×5.30	1/1.8″
acA2440-35um/uc	IMX264	2448×2048	35	m/c	8/12	USB 3.0	3.45×3.45	8.45×7.07	2/3″
acA2440-75um/uc	IMX250	2448×2048	75	m/c	8/12	USB 3.0	3.45×3.45	8.45×7.07	2/3″
acA2500-60um/uc	PYTHON 5000	2592×2048	60	m/c	8/10	USB 3.0	4.8×4.8	12.44×9.83	1″
NEW acA3088-57um/uc	IMX178	3088×2064	59	m/c	8/12	USB 3.0	2.4×2.4	7.41×4.95	1/1.8″
NEW acA4024-29um/uc	IMX226	4024×3036	31	m/c	8/12	USB 3.0	1.85×1.85	7.44 ×5.62	1/1.7″

Basler ace L	Sensor	Resolution (H×V pixels)	Frame Rate [fps]	Mono/ Color	Bit Depth	Interface	Pixel Size [µm²]	Sensor Size [mm²]	Optical Size
NEW acA4096-30um/uc	IMX267	4096×2168	32	m/c	8/12	USB 3.0	3.45×3.45	14.13 ×7.45	1″
NEW acA4096-40um/uc	IMX255	4096×2168	42	m/c	8/12	USB 3.0	3.45×3.45	14.13 ×7.45	1″
NEW acA4112-20um/uc	IMX304	4096×3000	23	m/c	8/12	USB 3.0	3.45×3.45	14.13 ×10.35	1.1″
NEW acA4112-30um/uc	IMX253	4096×3000	30	m/c	8/12	USB 3.0	3.45×3.45	14.13 ×10.35	1.1″

ace USB 3.0 cameras are available with C or CS-mount (depending on model).

NIR = Near Infrared Enhanced

TECHNICAL DETAILS

Area Scan Cameras

Basler pulse	Sensor	Resolution (H × V pixels)	Frame Rate [fps]	Mono/ Color	Bit Depth	Interface	Pixel Size [µm²]	Sensor Size [mm²]	Optical Size
puA1280-54um/uc	AR0134	1280 × 960	54	m/c	8/12	USB 3.0	3.75 × 3.75	4.80 × 3.60	1/3″
puA1600-60um/uc	EV76C570	1600 × 1200	60	m/c	8/12	USB 3.0	4.5 × 4.5	7.20 × 5.40	1/1.8″
puA1920-30um/uc	MT9P031	1920 × 1080	30	m/c	8/12	USB 3.0	2.2 × 2.2	4.22 × 2.38	1/3.7″
puA2500-14um/uc	MT9P031	2592 × 1944	14	m/c	8/12	USB 3.0	2.2 × 2.2	5.70 × 4.28	1/2.5″

pulse cameras are available with CS-mount.

Area Scan Cameras

Basler dart	Sensor	Resolution (H × V pixels)	Frame Rate [fps]	Mono/ Color	Bit Depth	Interface	Pixel Size [µm²]	Sensor Size [mm²]	Optical Size
daA1280-54um/uc	AR0134	1280 × 960	54	m/c	8/12	USB 3.0	3.75 × 3.75	4.80 × 3.60	1/3″
daA1600-60um/uc	EV76C570	1600 × 1200	60	m/c	8/12	USB 3.0	4.5 × 4.5	7.20 × 5.40	1/1.8″
daA1920-15um*[1]	MT9P031	1920 × 1080	15	m	8/12	USB 3.0	2.2 × 2.2	4.22 × 2.38	1/3.7″
daA1920-30um/uc	MT9P031	1920 × 1080	30	m/c	8/12	USB 3.0	2.2 × 2.2	4.22 × 2.38	1/3.7″
daA2500-14um/uc	MT9P031	2592 × 1944	14	m/c	8/12	USB 3.0	2.2 × 2.2	5.70 × 4.28	1/2.5″

dart USB 3.0 cameras are available with S or CS-mount or as a bare board variant without a lens mount.

*[1] Bare board only

Area Scan Cameras

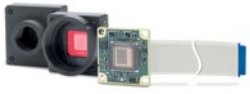

Basler dart	Sensor	Resolution (H × V pixels)	Frame Rate [fps]	Mono/ Color	Bit Depth	Interface	Pixel Size [µm²]	Sensor Size [mm²]	Optical Size
daA1280-54lm/lc	AR0134	1280 × 960	54	m/c	8/12	BCON for LVDS	3.75 × 3.75	4.80 × 3.60	1/3″
daA1600-60lm/lc	EV76C570	1600 × 1200	60	m/c	8/12	BCON for LVDS	4.5 × 4.5	7.20 × 5.40	1/1.8″
daA2500-14lm/lc	MT9P031	2592 × 1944	14	m/c	8/12	BCON for LVDS	2.2 × 2.2	5.70 × 4.28	1/2.5″

dart BCON for LVDS cameras are available with S- or CS-mount or as a bare board variant without a lens mount.

Area Scan Cameras

Basler dart	Sensor	Resolution (MP, H × V pixels)	Frame Rate [fps]	Mono/ Color	Bit Depth	Interface	Pixel Size [µm²]	Sensor Size [mm²]	Optical Size
NEW daA2500-60mm/mc	AR0521 CMOS	5 MP, 2592 × 1944	60	m/c	8	BCON for MIPI	2.2 × 2.2	5.70 × 4.30	1/2.5″

dart BCON for MIPI cameras are available with S-mount or as a bare board variant without a lens mount.

TECHNICAL DETAILS

Area Scan Cameras

Basler ace classic	Sensor	Resolution (H × V pixels)	Frame Rate [fps]	Mono/ Color	Bit Depth	Interface	Pixel Size [µm²]	Sensor Size [mm²]	Optical Size
acA640-90gm/gc	ICX424	659 × 494	90	m/c	8/12	GigE, PoE	7.4 × 7.4	4.88 × 3.66	1/3″
acA640-120gc	ICX618	658 × 492	120	c	8/12	GigE, PoE	5.6 × 5.6	3.69 × 2.77	1/4″
acA750-30gm/gc	ICX409	752 × 580	30	m/c	8/12	GigE, PoE	6.5 × 6.25	4.89 × 3.64	1/3″
acA780-75gm/gc	ICX415	782 × 582	75	m/c	8/12	GigE, PoE	8.3 × 8.3	6.49 × 4.83	1/2″
acA1300-22gm/gc	ICX445	1296 × 966	22	m/c	8/12	GigE, PoE	3.75 × 3.75	4.86 × 3.62	1/3″
acA1300-30gm/gc	ICX445	1296 × 966	30	m/c	8/12	GigE, PoE	3.75 × 3.75	4.86 × 3.62	1/3″
acA1280-60gm/gc*1	EV76C560	1282 × 1026	60	m/c	8/12	GigE, PoE	5.3 × 5.3	6.80 × 5.40	1/1.8″
acA1300-60gm/gc*2	EV76C560	1282 × 1026	60	m/c	8/12	GigE, PoE	5.3 × 5.3	6.80 × 5.40	1/1.8″
acA1300-60gmNIR*2	EV76C661	1282 × 1026	60	m	8/12	GigE, PoE	5.3 × 5.3	6.80 × 5.40	1/1.8″
acA1600-20gm/gc	ICX274	1626 × 1236	20	m/c	8/12	GigE, PoE	4.4 × 4.4	7.16 × 5.44	1/1.8″
acA1600-60gm/gc	EV76C570	1602 × 1202	60	m/c	8/12	GigE, PoE	4.5 × 4.5	7.20 × 5.40	1/1.8″
acA1920-25gm/gc	MT9P031	1920 × 1080	25	m/c	8/12	GigE, PoE	2.2 × 2.2	4.22 × 2.38	1/3.7″
acA2000-50gm/gc	CMV2000	2048 × 1088	50	m/c	8/12	GigE, PoE	5.5 × 5.5	11.26 × 5.98	2/3″
acA2000-50gmNIR	CMV2000	2048 × 1088	50	m	8/12	GigE, PoE	5.5 × 5.5	11.26 × 5.98	2/3″
acA2040-25gm/gc	CMV4000	2048 × 2048	25	m/c	8/12	GigE, PoE	5.5 × 5.5	11.26 × 11.26	1″
acA2040-25gmNIR	CMV4000	2048 × 2048	25	m	8/12	GigE, PoE	5.5 × 5.5	11.26 × 11.26	1″
acA2500-14gm/gc	MT9P031	2592 × 1944	14	m/c	8/12	GigE, PoE	2.2 × 2.2	5.70 × 4.28	1/2.5″
acA3800-10gm/gc	MT9J003	3840 × 2748	10	m/c	8/12	GigE, PoE	1.67 × 1.67	6.44 × 4.62	1/2.3″
acA4600-7gc	MT9F002	4608 × 3288	7	c	8/12	GigE, PoE	1.4 × 1.4	6.45 × 4.63	1/2.3″

Basler ace U	Sensor	Resolution (H × V pixels)	Frame Rate [fps]	Mono/ Color	Bit Depth	Interface	Pixel Size [µm²]	Sensor Size [mm²]	Optical Size
acA640-300gm/gc	PYTHON 300	640 × 480	376	m/c	8/10	GigE, PoE	4.8 × 4.8	3.07 × 2.30	1/4″
NEW acA720-290gm/gc	IMX287	720 × 540	293	m/c	8/12	GigE, PoE	6.9 × 6.9	4.97 × 3.73	1/2.9″
acA800-200gm/gc	PYTHON 500	800 × 600	240	m/c	8/10	GigE, PoE	4.8 × 4.8	3.84 × 2.88	1/3.6″
acA1300-75gm/gc	PYTHON 1300	1280 × 1024	88	m/c	8/10	GigE, PoE	4.8 × 4.8	6.14 × 4.92	1/2″
NEW acA1440-73gm/gc	IMX273	1440 × 1080	73	m/c	8/12	GigE, PoE	3.45 × 3.45	4.97 × 3.73	1/2.9″
acA1920-40gm/gc	IMX249	1920 × 1200	42	m/c	8/12	GigE, PoE	5.86 × 5.86	11.25 × 7.03	1/1.2″
acA1920-48gm/gc	PYTHON 2000	1920 × 1200	50	m/c	8/10	GigE, PoE	4.8 × 4.8	9.50 × 6.08	2/3″
acA1920-50gm/gc	IMX174	1920 × 1200	50	m/c	8/12	GigE, PoE	5.86 × 5.86	11.25 × 7.03	1/1.2″
acA2040-35gm/gc	IMX265	2048 × 1536	36	m/c	8/12	GigE, PoE	3.45 × 3.45	7.07 × 5.30	1/1.8″
acA2440-20gm/gc	IMX264	2448 × 2048	23	m/c	8/12	GigE, PoE	3.45 × 3.45	8.45 × 7.07	2/3″
acA2500-20gm/gc	PYTHON 5000	2592 × 2048	21	m/c	8/10	GigE, PoE	4.8 × 4.8	12.44 × 9.83	1″
NEW acA3088-16gm/gc	IMX178	3088 × 2064	16	m/c	8/12	GigE, PoE	2.4 × 2.4	7.41 × 4.95	1/1.8″
NEW acA4024-8gm/gc	IMX226	4024 × 3036	8	m/c	8/12	GigE, PoE	1.85 × 1.85	7.44 × 5.62	1/1.7″

Basler ace L	Sensor	Resolution (H × V pixels)	Frame Rate [fps]	Mono/ Color	Bit Depth	Interface	Pixel Size [µm²]	Sensor Size [mm²]	Optical Size
NEW acA4096-11gm/gc	IMX267	4096 × 2160	12	m/c	8/12	GigE, PoE	3.45 × 3.45	14.13 × 7.45	1″
NEW acA4112-8gm/gc	IMX304	4096 × 3000	8	m/c	8/12	GigE, PoE	3.45 × 3.45	14.13 × 10.35	1.1″

ace GigE cameras are available with C or CS-mount (depending on model).

NIR = Near Infrared Enhanced

*1 rolling shutter *2 global shutter (switchable)

TECHNICAL DETAILS

Area Scan Cameras

Basler aviator	Sensor	Resolution (H × V pixels)	Frame Rate [fps]	Mono/ Color	Bit Depth	Interface	Pixel Size [µm²]	Sensor Size [mm²]	Optical Size
avA1000-100gm/gc	KAI-01050	1024 × 1024	101	m/c	8/12	GigE	5.5 × 5.5	5.63 × 5.63	1/2″
avA1600-50gm/gc	KAI-02050	1600 × 1200	55	m/c	8/12	GigE	5.5 × 5.5	8.80 × 6.60	2/3″
avA1900-50gm/gc	KAI-02150	1920 × 1080	51	m/c	8/12	GigE	5.5 × 5.5	10.56 × 5.94	2/3″
avA2300-25gm/gc	KAI-04050	2330 × 1750	26	m/c	8/12	GigE	5.5 × 5.5	12.85 × 9.64	1″

aviator cameras are available with C-mount.

Area Scan Cameras

Basler pilot	Sensor	Resolution (H × V pixels)	Frame Rate [fps]	Mono/ Color	Bit Depth	Interface	Pixel Size [µm²]	Sensor Size [mm²]	Optical Size
piA640-210gm/gc	KAI-0340	648 × 488	210	m/c	8/12	GigE	7.4 × 7.4	4.80 × 3.61	1/3″
piA1000-48gm/gc	KAI-1020	1004 × 1004	48	m/c	8/12	GigE	7.4 × 7.4	7.43 × 7.43	2/3″
piA1000-60gm/gc	KAI-1020	1004 × 1004	60	m/c	8/12	GigE	7.4 × 7.4	7.43 × 7.43	2/3″
piA1600-35gm/gc	KAI-2020	1608 × 1208	35	m/c	8/12	GigE	7.4 × 7.4	11.90 × 8.94	1″
piA1900-32gm	KAI-2093	1928 × 1084	32	m	12	GigE	7.4 × 7.4	14.21 × 8.02	1″
piA2400-17gm/gc	ICX625	2456 × 2058	17	m/c	8/12	GigE	3.45 × 3.45	8.47 × 7.10	2/3″

pilot cameras are available with C-mount.

Area Scan Cameras

Basler scout	Sensor	Resolution (H × V pixels)	Frame Rate [fps]	Mono/ Color	Bit Depth	Interface	Pixel Size [µm²]	Sensor Size [mm²]	Optical Size
scA640-70gm/gc	ICX424	659 × 494	70	m/c	8/12	GigE	7.4 × 7.4	4.88 × 3.66	1/3″
scA750-60gm/gc	MT9V022	752 × 480	64	m/c	8	GigE	6.0 × 6.0	4.51 × 2.88	1/3″
scA1300-32gm/gc	ICX445	1296 × 966	32	m/c	8/12	GigE	3.75 × 3.75	4.86 × 3.62	1/3″
scA1400-17gm/gc	ICX285	1392 × 1040	17	m/c	8/12	GigE	6.45 × 6.45	8.98 × 6.71	2/3″
scA1400-30gm/gc	ICX285	1392 × 1040	30	m/c	8/12	GigE	6.45 × 6.45	8.98 × 6.71	2/3″
scA1600-14gm/gc	ICX274	1628 × 1236	14	m/c	8/12	GigE	4.4 × 4.4	7.16 × 5.44	1/1.8″
scA1600-28gm/gc	ICX274	1628 × 1236	28	m/c	8/12	GigE	4.4 × 4.4	7.16 × 5.44	1/1.8″

scout cameras are available with C-mount.

TECHNICAL DETAILS

Area Scan Cameras

Basler ace classic	Sensor	Resolution (H × V pixels)	Frame Rate [fps]	Mono/ Color	Bit Depth	Interface	Pixel Size [µm²]	Sensor Size [mm²]	Optical Size
acA2000-340km/kc	CMV2000	2048 × 1088	340	m/c	8/10/12	CL (full), PoCL	5.5 × 5.5	11.26 × 5.98	2/3″
acA2000-340kmNIR	CMV2000	2048 × 1088	340	m	8/10/12	CL (full), PoCL	5.5 × 5.5	11.26 × 5.98	2/3″
acA2040-180km/kc	CMV4000	2048 × 2048	180	m/c	8/10/12	CL (full), PoCL	5.5 × 5.5	11.26 × 11.26	1″
acA2040-180kmNIR	CMV4000	2048 × 2048	180	m	8/10/12	CL (full), PoCL	5.5 × 5.5	11.26 × 11.26	1″

ace Camera Link cameras are available with C-mount.

NIR = Near Infrared Enhanced

Area Scan Cameras

Basler aviator	Sensor	Resolution (H × V pixels)	Frame Rate [fps]	Mono/ Color	Bit Depth	Interface	Pixel Size [µm²]	Sensor Size [mm²]	Optical Size
avA1000-120km/kc	KAI-01050	1024 × 1024	120	m/c	8/10/12	CL (base)	5.5 × 5.5	5.63 × 5.63	1/2″
avA1600-65km/kc	KAI-02050	1600 × 1200	67	m/c	8/10/12	CL (base)	5.5 × 5.5	8.80 × 6.60	2/3″
avA1900-60km/kc	KAI-02150	1920 × 1080	62	m/c	8/10/12	CL (base)	5.5 × 5.5	10.56 × 5.94	2/3″
avA2300-30km/kc	KAI-04050	2330 × 1750	31	m/c	8/10/12	CL (base)	5.5 × 5.5	12.85 × 9.64	1″

aviator Camera Link cameras are available with C-mount.

Area Scan Cameras

Basler beat	Sensor	Resolution (H × V pixels)	Frame Rate [fps]	Mono/ Color	Bit Depth	Interface	Pixel Size [µm²]	Sensor Size [mm²]	Optical Size
beA4000-62km	CMV12000	4096 × 3072	62	m	8/10/12	CL (full)	5.5 × 5.5	22.53 × 16.90	1.75″
beA4000-62kc	CMV12000	4088 × 3070	62	c	8/10/12	CL (full)	5.5 × 5.5	22.53 × 16.90	1.75″

Basler beat cameras are available with F-, M42 × 1-, M58 × 0,75-, M42 × 0.75-mount.

Line Scan Cameras

Basler racer	Sensor	Resolution	Line Rate [kHz]	Mono/ Color	Bit Depth	Interface	Pixel Size [µm²]	Sensor Length [mm]
raL2048-48gm	DR-2k-7	2048	51	m	8/12	GigE	7.0 × 7.0	14.3
raL4096-24gm	DR-4k-7	4096	26	m	8/12	GigE	7.0 × 7.0	28.7
raL6144-16gm	DR-6k-7	6144	17	m	8/12	GigE	7.0 × 7.0	43.0
raL8192-12gm	DR-8k-3.5	8192	12	m	8/12	GigE	3.5 × 3.5	28.7
raL12288-8gm	DR-12k-3.5	12288	8	m	8/12	GigE	3.5 × 3.5	43.0

racer cameras are available with C-, F-, M42 × 1-, M42 × 0.75-mount.

TECHNICAL DETAILS

Line Scan Cameras

Basler runner	Sensor	Resolution	Line Rate [kHz]	Mono/ Color	Bit Depth	Interface	Pixel Size [µm²]	Sensor Length [mm]
ruL2098-10gc	KLI-2113	3×2098	9.2	c	8/12	GigE	14.0×14.0	29.37

runner cameras are available with F-mount.

Line Scan Cameras

Basler racer	Sensor	Resolution	Line Rate [kHz]	Mono/ Color	Bit Depth	Interface	Pixel Size [µm²]	Sensor Length [mm]
raL2048-80km	DR-2k-7	2048	80	m	8/10/12	CL*1	7.0×7.0	14.3
raL4096-80km	DR-4k-7	4096	80	m	8/10/12	CL*2	7.0×7.0	28.7
raL6144-80km	DR-6k-7	6144	80	m	8/10/12	CL (full)	7.0×7.0	43.0
raL8192-80km	DR-8k-3.5	8192	80	m	8/10/12	CL (full)	3.5×3.5	28.7
raL12288-66km	DR-12k-3.5	12288	66	m	8/10/12	CL (full)	3.5×3.5	43.0

racer cameras are available with C-, F-, M42×1-, M42×0.75-mount.

*1 CL (base), PoCL, *2 CL (medium), PoCL

Line Scan Cameras

Basler sprint	Sensor	Resolution	Line Rate [kHz]	Mono/ Color	Bit Depth	Interface	Pixel Size [µm²]	Sensor Length [mm]
spL2048-39kc	Dual Line CMOS	2048	38.6	c	8/10/12	CL (base)	10.0×10.0	20.48
spL2048-50km/kc	Dual Line CMOS	2048	50	m/c	8/10/12	CL*1	10.0×10.0	20.48
spL2048-70km/kc	Dual Line CMOS	2048	70	m/c	8/10/12	CL*1	10.0×10.0	20.48
spL2048-140km	Dual Line CMOS	2048	140	m	8/10/12	CL (b/m/f)	10.0×10.0	20.48
spL4096-39km/kc	Dual Line CMOS	4096	38.6	m/c	8/10/12	CL (b/m/f)	10.0×10.0	40.96
spL4096-50km/kc	Dual Line CMOS	4096	50	m/c	8/10/12	CL (b/m/f)	10.0×10.0	40.96
spL4096-70km/kc	Dual Line CMOS	4096	70	m/c	8/10/12	CL (b/m/f)	10.0×10.0	40.96
spL4096-140km/kc	Dual Line CMOS	4096	140	m/c	8/10/12	CL (b/m/f)	10.0×10.0	40.96
spL8192-39kc	Dual Line CMOS	8192	38.6	c	8/10/12	CL (b/m/f)	10.0×10.0	81.92
spL8192-39kcCl*2	Dual Line CMOS	8192	38.6	c	8/10/12	CL (b/m/f)	10.0×10.0	81.92
spL8192-50km	Dual Line CMOS	8192	50	m	8/10/12	CL (b/m/f)	10.0×10.0	81.92
spL8192-70km	Dual Line CMOS	8192	70	m	8/10/12	CL (b/m/f)	10.0×10.0	81.92

sprint cameras are available with F-, V- or M42×1-mount (depending on model).

*1 Mono: base, Color: base/medium/full, *2 with Color Improvement Feature, without Line Stamp Feature

TECHNICAL DETAILS

Line Scan Cameras

Basler Line Scan	Sensor	Resolution	Line Rate [kHz]	Mono/ Color	Bit Depth	Interface	Pixel Size [µm²]	Sensor Length [mm]
L301k/kc	Tri-linear CCD	3×2098	9.2	m/c	8/10	CL (base)	14.0×14.0	29.37
L304k/kc	Tri-linear CCD	3×4080	7.2	m/c	8/10	CL (base)	10.0×10.0	40.80

L300 cameras are available with F- or M58×0,75-mount (depending on model).

3D Cameras

Basler ToF Camera	Sensor	Resolution	Frame Rate [fps]	Mono/ Color	Type	Interface	Accuracy	Working Range
tof640-20gm_850nm	Panasonic	640×480	20	m	NIR	GigE	+/- 1 cm*	0 m to 13 m

*Scene dependent: in a range of 0.5 m to 5.8 m, based on a flat white target with over 90% reflectivity, in a room with zero ambient light at 22°C, in factory settings mode, looking at the center of the range image.

IP Cameras

IP Fixed Box	Sensor	Resolution	Max. Frame Rate [fps]	Interface	Pixel Size [µm²]	Optical Size	Video Compression	Lens Mount	Day/ Night
BIP2-1000c	CCD	1024×768	30	Fast Ethernet	4.65×4.65	1/3″	MJPEG, MPEG-4, H.264	CS-mount, DC iris	---
BIP2-1000c-dn	CCD	1024×768	30	Fast Ethernet	4.65×4.65	1/3″	MJPEG, MPEG-4, H.264	CS-mount, DC iris	Movable IR-cut filter
BIP2-1300c	CCD	1280×960	30	Fast Ethernet	3.75×3.75	1/3″	MJPEG, MPEG-4, H.264	CS-mount, DC iris	---
BIP2-1300c-dn	CCD	1280×960	30	Fast Ethernet	3.75×3.75	1/3″	MJPEG, MPEG-4, H.264	CS-mount, DC iris	Movable IR-cut filter
BIP2-1600c	CCD	1600×1200	12.5	Fast Ethernet	4.40×4.40	1/1.8″	MJPEG, MPEG-4, H.264	CS-mount, DC iris	---
BIP2-1600c-dn	CCD	1600×1200	12.5	Fast Ethernet	4.40×4.40	1/1.8″	MJPEG, MPEG-4, H.264	CS-mount, DC iris	Movable IR-cut filter
BIP2-1600-25c	CCD	1600×1200	25	Fast Ethernet	4.40×4.40	1/1.8″	MJPEG, MPEG-4, H.264	CS-mount, DC iris	---
BIP2-1600-25c-dn	CCD	1600×1200	25	Fast Ethernet	4.40×4.40	1/1.8″	MJPEG, MPEG-4, H.264	CS-mount, DC iris	Movable IR-cut filter
BIP2-1280c	CMOS	1280×720	30	Fast Ethernet	3.30×3.30	1/3″	MJPEG, MPEG-4, H.264	CS-mount, DC iris	---
BIP2-1280c-dn	CMOS	1280×720	30	Fast Ethernet	3.30×3.30	1/3″	MJPEG, MPEG-4, H.264	CS-mount, DC iris	Movable IR-cut filter
BIP2-1920c	CMOS	1920×1080	30	Fast Ethernet	2.20×2.20	1/3″	MJPEG, MPEG-4, H.264	CS-mount, DC iris	---
BIP2-1920c-dn	CMOS	1920×1080	30	Fast Ethernet	2.20×2.20	1/3″	MJPEG, MPEG-4, H.264	CS-mount, DC iris	Movable IR-cut filter
BIP2-1920-30c	CMOS	1920×1080	30	Fast Ethernet	5.86×5.86	1/1.3″	MJPEG, MPEG-4, H.264	C-mount, DC iris	---
BIP2-2500c	CMOS	2560×1920	15 (3 MP)	Fast Ethernet	2.20×2.20	1/2.5″	MJPEG, MPEG-4, H.264	CS-mount, DC iris	---
BIP2-2500c-dn	CMOS	2560×1920	15 (3 MP)	Fast Ethernet	2.20×2.20	1/2.5″	MJPEG, MPEG-4, H.264	CS-mount, DC iris	Movable IR-cut filter

TECHNICAL DETAILS

Basler Cameras for Medical & Life Sciences

NEW Basler MED ace	Sensor	Resolution (H×V pixels)	Frame Rate [fps]	Mono/ Color	Interface	Pixel Size [µm²]	Sensor Size [mm²]	Optical Size
Basler MED ace 2.3 MP 41 color/mono	IMX 249	1920×1200	41 fps	m/c	USB 3.0	5.86×5.86	11.25×7.03	1/1.2″
Basler MED ace 2.3 MP 164 color/mono	IMX 174	1920×1200	164 fps	m/c	USB 3.0	5.86×5.86	11.25×7.03	1/1.2″
Basler MED ace 5.1 MP 35 color/mono	IMX 264	2448×2048	35 fps	m/c	USB 3.0	3.45×3.45	8.45×7.07	2/3″
Basler MED ace 5.1 MP 75 color/mono	IMX 250	2448×2048	75 fps	m/c	USB 3.0	3.45×3.45	8.45×7.07	2/3″
Basler MED ace 5.3 MP 20 color/mono	PYTHON 5000	2592×2048	20 fps	m/c	GigE	4.80×4.80	12.44×9.83	1″
Basler MED ace 8.9 MP 32 color/mono	IMX 267	4096×2168	32 fps	m/c	USB 3.0	3.45×3.45	14.13×7.45	1″
Basler MED ace 8.9 MP 42 color/mono	IMX 255	4096×2168	42 fps	m/c	USB 3.0	3.45×3.45	14.13×7.45	1″
Basler MED ace 12.3 MP 23 color/mono	IMX 304	4096×3000	23 fps	m/c	USB 3.0	3.45×3.45	14.13×10.35	1.1″
Basler MED ace 12.3 MP 30 color/mono	IMX 253	4096×3000	30 fps	m/c	USB 3.0	3.45×3.45	14.13×10.35	1.1″
PLANNED Basler MED ace 20.0 MP 17 color/mono	IMX 183	5544×3964*	17 fps*	m/c	USB 3.0	2.40×2.40*	13.30×9.51*	1″

The Basler MED ace cameras are available with C-mount.

With the certification according to DIN EN ISO 13485:2016, Basler has proven its quality standards for the development, production, distribution and service of digital cameras as well as for placing them on the market.

ISO 13485:2016

The Basler MED ace cameras incorporate unique Basler MED feature sets: Easy Compliance, Brilliant Image, Perfect Color, Low Light Imaging, High Speed and Industrial Excellence. They combine market-leading hardware, firmware and software features.
For more information please visit *www.baslerweb.com/BaslerMEDace*

*preliminary

TECHNICAL DETAILS

Basler Cameras for Medical & Life Sciences

PowerPack for Microscopy	Sensor	Resolution (H×V pixels)	Frame Rate [fps]	Mono/ Color	Dynamic Range [dB]	Interface	Pixel Size [µm²]	Active Area [mm]	Optical Size
Microscopy pulse 1.2MP	ON Semi-conductor	1280×960	54	c	64	USB 3.0	3.75×3.75	6.00	1/3″
Microscopy pulse 2.0MP	ON Semi-conductor	1920×1080	30	c	70.1	USB 3.0	2.20×2.20	4.85	1/3.7″
Microscopy pulse 3.3MP	ON Semi-conductor	2048×1584	20	c	70.1	USB 3.0	2.20×2.20	5.7	1/3″
Microscopy pulse 5.0MP	ON Semi-conductor	2592×1944	14	c	70.1	USB 3.0	2.20×2.20	7.13	1/2.5″
Microscopy ace 1.3MP 48	Sony PREGIUS	1280×1024	48	c	73	USB 3.0	5.86×5.86	9.60	1/1.8″
Microscopy ace 1.3MP 145	ON Semi-conductor	1280×1024	145	c	56.2	USB 3.0	4.80×4.80	7.90	1/2″
Microscopy ace 1.3MP 200	ON Semi-conductor	1280×1024	200	m	56.3	USB 3.0	4.80×4.80	7.90	1/2″
NEW Microscopy ace 2.3 MP Mono	Sony PREGIUS	1920×1200	40	m	73.0	USB 3.0	5.86×5.86	13.30	1/1.2″
Microscopy ace 2.3 MP Color	Sony PREGIUS	1920×1200	40	c	73	USB 3.0	5.86×5.86	13.30	1/1.2″
Microscopy ace 3.2 MP	Sony PREGIUS	2048×1536	55	c	71.4	USB 3.0	3.45×3.45	9.00	1/1.8″
NEW Microscopy ace 5.1 MP Mono	Sony PREGIUS	2448×2048	35	m	70.6	USB 3.0	3.45×3.45	11.20	2/3″
Microscopy ace 5.1 MP Color	Sony PREGIUS	2448×2048	35	c	70.6	USB 3.0	3.45×3.45	11.20	2/3″
NEW Microscopy ace 12.2 MP	Sony Starvis	4024×3036	15	c	70.6	USB 3.0	1.85×1.85	9.30	1/1.7″

Basler Microscopy ace cameras are available with C-mount. Basler Microscopy pulse cameras are available with CS-mount, and are delivered with a CS- to C-mount adapter ring.

The Basler Microscopy Cameras are the centerpiece of Basler's PowerPack for Microscopy which delivers all the necessary components for a straightforward setup and easy installation, including the Basler Microscopy Software for camera control, image acquisition, processing, analysis and documentation. These cameras cannot be ordered separately from the Basler PowerPack for Microscopy.
For more information please visit *www.baslerweb.com/MicroscopyPowerPack*

TECHNICAL DETAILS

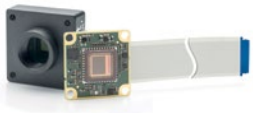

Basler Embedded Vision Kits

Embedded Vision	Camera	Interface	Sensor	Resolution (HxV pixels)	Frame Rate [fps]	Mono/ Color	Lens	Processing Board
dart USB Evaluation Kit	daA2500-14uc	USB 3.0	MT9P031	2592x1944	14	c	Evetar M12B0816W F1,6 f8 mm, 1/2	-
dart BCON for LVDS Development Kit	daA2500-14lc	BCON for LVDS	MT9P031	2592x1944	14	c	Evetar M12B0816W F1,6 f8 mm, 1/2	AVNET 7010 MicroZed SOM

All Embedded Vision Kits come with a suitable cable and our free pylon Camera Software Suite. The dart BCON for LVDS Development Kit includes an additional processing board.

BASLER´S COMPONENTS

Basler´s Components Enhance Your Vision

Basler offers you extensively tested cables and lenses, which are optimized for use with our Basler cameras. Our cooperation with certified suppliers facilitates the operation of a high-performance image processing system.

An image processing system needs more than just a camera, lens and light source. A stable vision system also requires accessories for handling data transfer.

Basler offers a wide variety of accessories such as lenses, I/O cables, power supplies, data cables, host adapter cards, hubs or switches designed to help you get the most out of your camera. To ensure full compatibility, all accessories are tested with our cameras. Cables and power supplies are all EMC tested for industrial conditions by our support team.

Basler Original Equipment

The accessories market for machine vision cameras is broad and deep. Therefore, Basler offers products specially developed for our cameras, meaning camera and lens or cables harmonize perfectly with one another. The products are produced exclusively for us and are available only from Basler. All products with the Basler Original Equipment seal allow top performance when combined with Basler cameras.

Why Components from Basler?

- Perfect match with our Basler cameras
- Extensive and qualified portfolio
- One-stop-shopping for your image processing system
- Performance stability through premium quality standards
- Qualified selection of components avoids changes in existing systems
- Professional consultancy during preselection

USB 3.0 Accessories from Basler

Especially with a USB 3.0 interface, it is important to think about the right accessories to achieve stability in a system with one or more cameras. In particular USB 3.0 accessories from the consumer sector may lead to major disadvantages for the user, as they are not designed to handle the higher demands of machine vision applications.

Our portfolio of USB 3.0 accessories covers a broad selection of cables, host adapter cards and a USB 3.0 hub.

Your Benefits Through USB 3.0 Accessories:

- High stability of your USB 3.0 set up
- Simple integration into all image processing applications
- Tested USB 3.0 accessories with reliable premium quality for industrial applications
- Carefully selected accessories for a perfect match
- Plug and play functionality

Have a look at the matching components for your camera model at
www.baslerweb.com/accessories

Typcial set-up of a camera system:

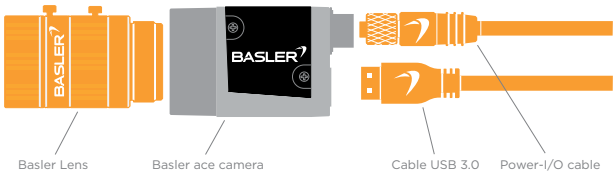

BASLER´S COMPONENTS

Basler Lenses

With more and more lens suppliers entering the market, choosing the optimal lens becomes more and more challenging. Traditionally, decisions were based on a trade-off between the best possible quality and a matching price-performance ratio, but a third factor is gaining importance: the supplier's reliability.

Basler Lenses offer exceptional value in all three areas. In addition, the competitive purchase price is augmented by reduced transaction costs, as you reduce the number of vendors in your supply chain.

Basler Lenses 1/2.5"

The ideal match for sensors smaller than 1/2" is the **Basler Original Equipment** lens line of high performance lenses. Specially designed for Basler cameras, these lenses deliver exceptionally high resolution and facilitate a sharp image from the center of the frame to the corners.

Highlights of the Basler Lenses 1/2.5"

- Exceptionally high resolution of 5 MP to bring out the smallest details in your image
- An orange dot on the iris range indicates the optimal aperture to easily achieve the sharpest image
- Space-saving size
- Designed in cooperation with Fujinon, global leaders in optical manufacturing
- These Basler Lenses 1/2.5" are the perfect addition for Basler ace, dart and pulse cameras with sensors sized smaller than 1/2" and high resolution
- Basler Original quality promise

Basler Lenses 2/3"

The standard Basler lens series for sensor sizes up to 2/3" is designed for bigger sensors and a common resolution of up to 2 MP. Thus, they are particularly suitable for applications where a lower resolution is sufficient. Moreover, with their excellent price/performance ratio, they enable a cost-effective vision system.

Highlights of the Basler Lenses 2/3"

- Suitable resolution for cost efficient machine vision applications
- Optimized design focused on the most important features for quick and easy use
- Produced by a qualified, trusted lens manufacturer
- Basler Lenses 2/3" are a good match for Basler ace, dart and pulse cameras with sensors sized greater than 1/2" up to 2/3" and standard resolution of up to 2 MP

BASLER´S COMPONENTS

Basler Lenses 1/2.5"	C125-0418-5M	C125-0618-5M	C125-0818-5M	C125-1218-5M	C125-1620-5M	C125-2522-5M
Maximum image circle	1/2.5" (7.3 mm)					
Mount	C-mount					
Focal length	4 mm	6 mm	8 mm	12 mm	16 mm	25 mm
Maximum relative aperture	1:1.8				1:2.0	1:2.2

Specifications are subject to change without prior notice. Latest specifications can be found on www.baslerweb.com/manuals.

For availability please refer to our website www.baslerweb.com/lenses

PRELIMINARY PLANNED

Basler Lenses 2/3"	C23-0816-2M	C23-1216-2M*	C23-1616-2M*	C23-2518-2M	C23-3520-2M	C23-5026-2M
Maximum image circle	2/3" (11 mm)					
Mount	C-mount					
Focal length	8 mm	12 mm	16 mm	25 mm	35 mm	50 mm
Maximum relative aperture	1:1.6			1:1.8	1:2.0	1:2.5

Specifications are subject to change without prior notice. Latest specifications can be found on www.baslerweb.com/manuals.

* vignetting visible

For availability please refer to our website www.baslerweb.com/lenses

Need help selecting the right lens for your application?

Our Lens Selector makes it easy to search for the right lens for your Basler area scan camera. The Lens Selector is built around a complex set of calculations, but from the user standpoint it is remarkably easy to use: Visitors to *www.baslerweb.com/lens-selector* can enter the pertinent data for their application (such as necessary angle of view, working distance, object size, etc.). The Lens Selector then calculates the necessary focal length and proposes suitable lenses for the size and resolution of the sensor.

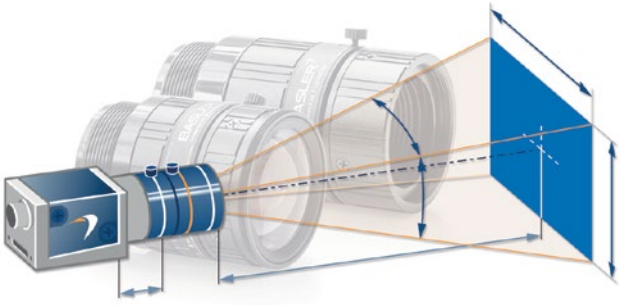

Get your free version: www.baslerweb.com/pylon

Basler pylon Camera Software Suite

The pylon Camera Software Suite operates with all Basler line scan and area scan cameras - no matter what interface they use. It offers stable, reliable and flexible data exchange between Basler cameras and PCs, for Windows and Linux on x86 and ARM based systems – at a very low CPU load.

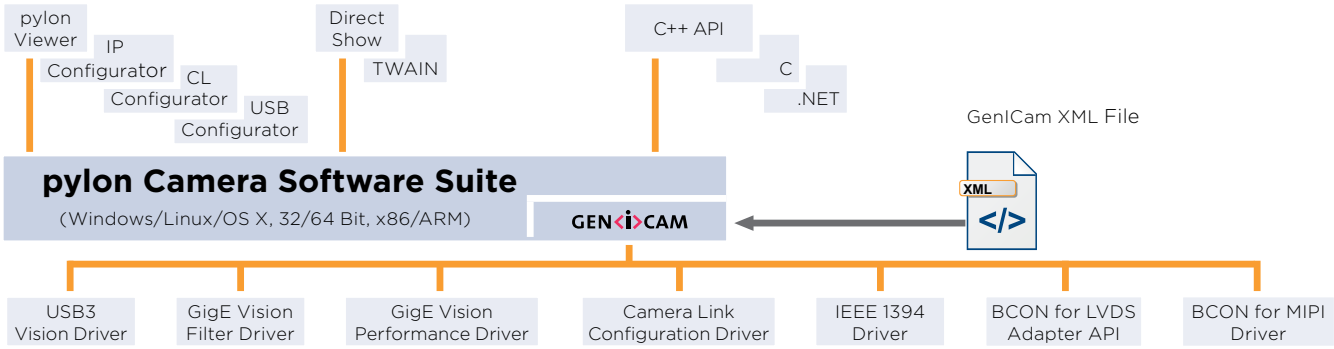

The architecture of the pylon Camera Software Suite is based on GenICam Technology, which offers you easy access to the newest camera models and the latest features. Changes to an existing camera device in your application essentially become a plug-and-play process.

An easy-to-use set of tools lets you configure the camera's interface. Use the **pylon Viewer** to set camera parameters, to capture and display images, and to evaluate the camera.

The **pylon USB3 Vision Driver** fully supports the USB3 Vision standard. It allows Basler USB 3.0 cameras to use the full speed and bandwidth of USB 3.0 for image transmission while reducing resource load and using off-the-shelf hardware components.

The **pylon GigE Vision Drivers** quickly separate incoming packets carrying image data from other traffic on the network and make the data available for use by your vision application while requiring the lowest CPU resources.

The pylon **IEEE 1394b Driver** gives you access to a well-established interface technology, and the pylon **Camera Link Configuration Driver** offers comfortable access to all camera parameters of Basler's latest Camera Link families ace, aviator, and racer.

The **BCON Adapter API** allows easy implementation of an adapter to communicate with the systems I^2C interface. A ready to use sample adapter implementation is also provided.

The **MIPI Driver Package** offers plug and play experience with Basler MIPI-CSI-2 camera modules for supported plaltforms

The pylon Camera Software Suite also contains a powerful SDK that supports any type of application development. The pylon package contains the following main modules. Each one can be individually selected/unselected during the installation process, preventing the installation of unneeded modules on your system:

- USB3 Vision Driver
- GigE Vision Filter Driver
- GigE Vision Performance Driver
- IEEE 1394 Driver
- BCON Adapter API
- MIPI Driver Package
- Camera Link Serial Communication Driver
- pylon Viewer
- SDK for all cameras; C, C++, .NET (C#, VB.NET, ...); the 'pylon for Linux' version only supports the GigE and USB 3.0 interface via a C++ API

The pylon Camera Software Suite can be downloaded for free at *www.baslerweb.com/pylon*. For more information on the installation process, refer to the pylon Installation Guide. The helpful pylon Release Notes contain all improvements and bug fixes since the first pylon version.

BASLER WORLDWIDE

We maintain a worldwide network of subsidiaries, offices and distributors to ensure that Basler customers always have a knowledgeable contact person in their area.

North, Middle, South America

7 **Basler, Inc. USA**
Exton (Subsidiary)
Tel. +1 610 280 0171
sales.usa@baslerweb.com

8 **Basler Office Canada**
Toronto
Rob Karimi
Tel. +1 484 840 7214
rob.karimi@baslerweb.com

Europe, Middle East, Africa

1 **Basler AG Headquarters**
Germany, Ahrensburg
Tel. +49 4102 463 500
sales.europe@baslerweb.com

2 **Basler Office Benelux**
Cor Valk
Tel. +31 6 83 99 20 56
cor.valk@baslerweb.com

3 **Basler Office UK & IRL**
Reading
Mark Williams
Tel. +44 7868 844 808
mark.williams@baslerweb.com

4 **Basler Office RU, BY & UA**
Chernogolovka
Victor Egorov
Tel. +7 916 813 39 83
victor.egorov@baslerweb.com

5 **Basler Office PL, CZ & SK**
Warsaw
Michal Wasilewski
Tel. +48 504 990 494
michal.wasilewski@baslerweb.com

6 **Basler Office FRA**
Vincent Prevost
Tel. +33 632 306 534
vincent.prevost@baslerweb.com

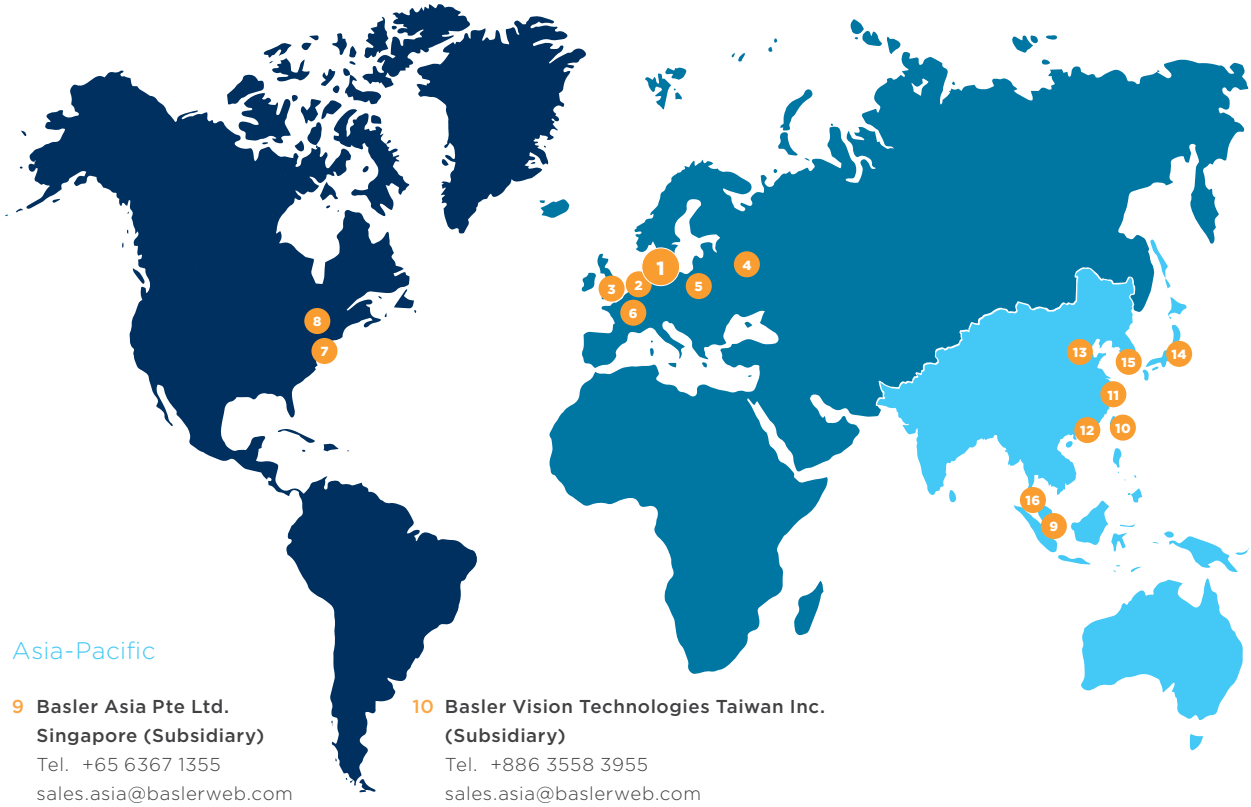

Asia-Pacific

9 **Basler Asia Pte Ltd.**
Singapore (Subsidiary)
Tel. +65 6367 1355
sales.asia@baslerweb.com

10 **Basler Vision Technologies Taiwan Inc.**
(Subsidiary)
Tel. +886 3558 3955
sales.asia@baslerweb.com

11 **Basler China**
Shanghai (Representative Office)
Tel. +86 21 6230 2160
sales.asia@baslerweb.com

12 **Basler Office China**
Shenzhen
Tel. +86 186 8031 6909
sales.asia@baslerweb.com

13 **Basler Office China**
Beijing
Tel. +86 137 187 469 17
sales.asia@baslerweb.com

14 **Basler Japan**
Tokyo (Representative Office)
Tel. +81 3 6402 4350
sales.asia@baslerweb.com

15 **Basler Korea**
Seoul (Representative Office)
Tel. +82 707 1363 114
sales.asia@baslerweb.com

16 **Basler Office Malaysia**
Penang
Tel. +60 124 237 089
sales.asia@baslerweb.com

OTHER INFORMATION

How Does Basler Measure and Define Image Quality?

1288 EMVA Standard Compliant

Basler is leading the effort to standardize image quality and sensitivity measurement for cameras and sensors. We are giving the EMVA 1288 standard our strongest support because it describes a unified method to measure, compute, and present the specification parameters for cameras and image sensors. Our cameras are characterized and measured in 100% compliance with the EMVA 1288 standard. Measurement reports can be downloaded from our website.

How Does Basler Ensure Superior Quality and Reliable High Performance?

Our approach to quality assurance is rigorous: we continually audit all facets of our business to ensure powerful performance, increase efficiency and reduce costs for our customers. We are compliant with all major quality standards including ISO 9001, CE, RoHS, and more. To ensure consistently high product quality, we employ several quality inspection procedures during manufacturing.

Every Basler camera is subjected to exhaustive optical and mechanical tests before leaving the factory. We have developed a unique combination of optics, hardware, and software tools that can quickly and efficiently calibrate a camera and measure its performance against a set of standard performance criteria. Regardless of what technology or camera model you choose you can be assured of consistent performance.

3-Year Warranty

Basler offers a 3-year warranty for their cameras and Basler Lenses 1/2.5". We make this unprecedented promise because we have unparalleled confidence in our products. We continually reinvest in research, development and superior manufacturing capabilities so that our customers can fully rely on the products we manufacture.

About Basler

Basler is a leading manufacturer of high-quality digital cameras and accessories for industry, medicine, traffic and a variety of other markets. The company's product portfolio encompasses area scan and line scan cameras in compact housing dimensions, camera modules in board level variants for embedded solutions, and 3D cameras. The catalog is rounded off by our user-friendly pylon SDK and a broad spectrum of accessories, including a number developed specially for Basler and optimally harmonized for our cameras .

Basler has 30 years of experience in computer vision. The company is home to approximately 500 employees at its headquarters in Ahrensburg, Germany, and its subsidiaries and sales offices in Europe, Asia, and North America.

Basler AG Germany, Headquarters

©Basler AG, No. 58, 03/2018
ID 2000030024

BASLER
the power of sight