# Basler Cameras

PRODUCT LINE OVERVIEW

USB3 VISION BCON for LVDS BCON for MIPI GigE VISION CAMERA Link

BASLER
the power of sight

# TECHNICAL DETAILS

Specifications are subject to change without notice.
Latest specifications and availability can be found on our *website www.baslerweb.com/products*. Please visit *www.baslerweb.com/manuals* for the detailed camera User's Manual and *www.baslerweb.com/thirdparty* for information on third party software.

## Area Scan Cameras

| Basler ace classic | Sensor | Resolution (H×V pixels) | Frame Rate [fps] | Mono/ Color | Bit Depth | Interface | Pixel Size [µm²] | Sensor Size [mm²] | Optical Size |
|---|---|---|---|---|---|---|---|---|---|
| acA640-90um/uc | ICX424 | 659×494 | 90 | m/c | 8/12 | USB 3.0 | 7.4×7.4 | 4.88×3.66 | 1/3″ |
| acA1300-30um/uc | ICX445 | 1296×966 | 30 | m/c | 8/12 | USB 3.0 | 3.75×3.75 | 4.86×3.62 | 1/3″ |
| acA1600-20um/uc | ICX274 | 1626×1236 | 20 | m/c | 8/12 | USB 3.0 | 4.4×4.4 | 7.16×5.44 | 1/1.8″ |
| acA1920-25um/uc | MT9P031 | 1920×1080 | 26 | m/c | 8/12 | USB 3.0 | 2.2×2.2 | 4.22×2.38 | 1/3.7″ |
| acA2000-165um/uc | CMV2000 | 2048×1088 | 165 | m/c | 8/12 | USB 3.0 | 5.5×5.5 | 11.26×5.98 | 2/3″ |
| acA2000-165umNIR | CMV2000 | 2048×1088 | 165 | m | 8/12 | USB 3.0 | 5.5×5.5 | 11.26×5.98 | 2/3″ |
| acA2040-90um/uc | CMV4000 | 2048×2048 | 90 | m/c | 8/12 | USB 3.0 | 5.5×5.5 | 11.26×11.26 | 1″ |
| acA2040-90umNIR | CMV4000 | 2048×2048 | 90 | m | 8/12 | USB 3.0 | 5.5×5.5 | 11.26×11.26 | 1″ |
| acA2500-14um/uc | MT9P031 | 2592×1944 | 14 | m/c | 8/12 | USB 3.0 | 2.2×2.2 | 5.70×4.28 | 1/2.5″ |
| acA3800-14um/uc | MT9J003 | 3840×2748 | 14 | m/c | 8/12 | USB 3.0 | 1.67×1.67 | 6.44×4.62 | 1/2.3″ |
| acA4600-10uc | MT9F002 | 4608×3288 | 10 | c | 8/12 | USB 3.0 | 1.4×1.4 | 6.45×4.63 | 1/2.3″ |

| Basler ace U | Sensor | Resolution (H×V pixels) | Frame Rate [fps] | Mono/ Color | Bit Depth | Interface | Pixel Size [µm²] | Sensor Size [mm²] | Optical Size |
|---|---|---|---|---|---|---|---|---|---|
| acA640-750um/uc | PYTHON 300 | 640×480 | 751 | m/c | 8/10 | USB 3.0 | 4.8×4.8 | 3.07×2.30 | 1/4″ |
| NEW acA720-520um/uc | IMX287 | 720×540 | 520 | m/c | 8/12 | USB 3.0 | 6.9×6.9 | 4.97×3.73 | 1/2.9″ |
| acA800-510um/uc | PYTHON 500 | 800×600 | 511 | m/c | 8/10 | USB 3.0 | 4.8×4.8 | 3.84×2.88 | 1/3.6″ |
| acA1300-200um/uc | PYTHON 1300 | 1280×1024 | 203 | m/c | 8/10 | USB 3.0 | 4.8×4.8 | 6.14×4.92 | 1/2″ |
| NEW acA1440-220um/uc | IMX273 | 1440×1080 | 220 | m/c | 8/12 | USB 3.0 | 3.45×3.45 | 4.97×3.73 | 1/2.9″ |
| acA1920-40um/uc | IMX249 | 1920×1200 | 41 | m/c | 8/12 | USB 3.0 | 5.86×5.86 | 11.25×7.03 | 1/1.2″ |
| acA1920-150um/uc | PYTHON 2000 | 1920×1200 | 150 | m/c | 8/10 | USB 3.0 | 4.8×4.8 | 9.50×6.08 | 2/3″ |
| acA1920-155um/uc | IMX174 | 1920×1200 | 164 | m/c | 8/12 | USB 3.0 | 5.86×5.86 | 11.25×7.03 | 1/1.2″ |
| acA2040-55um/uc | IMX265 | 2048×1536 | 55 | m/c | 8/12 | USB 3.0 | 3.45×3.45 | 7.07×5.30 | 1/1.8″ |
| acA2040-120um/uc | IMX252 | 2048×1536 | 120 | m/c | 8/12 | USB 3.0 | 3.45×3.45 | 7.07×5.30 | 1/1.8″ |
| acA2440-35um/uc | IMX264 | 2448×2048 | 35 | m/c | 8/12 | USB 3.0 | 3.45×3.45 | 8.45×7.07 | 2/3″ |
| acA2440-75um/uc | IMX250 | 2448×2048 | 75 | m/c | 8/12 | USB 3.0 | 3.45×3.45 | 8.45×7.07 | 2/3″ |
| acA2500-60um/uc | PYTHON 5000 | 2592×2048 | 60 | m/c | 8/10 | USB 3.0 | 4.8×4.8 | 12.44×9.83 | 1″ |
| NEW acA3088-57um/uc | IMX178 | 3088×2064 | 59 | m/c | 8/12 | USB 3.0 | 2.4×2.4 | 7.41×4.95 | 1/1.8″ |
| NEW acA4024-29um/uc | IMX226 | 4024×3036 | 31 | m/c | 8/12 | USB 3.0 | 1.85×1.85 | 7.44 ×5.62 | 1/1.7″ |

| Basler ace L | Sensor | Resolution (H×V pixels) | Frame Rate [fps] | Mono/ Color | Bit Depth | Interface | Pixel Size [µm²] | Sensor Size [mm²] | Optical Size |
|---|---|---|---|---|---|---|---|---|---|
| NEW acA4096-30um/uc | IMX267 | 4096×2168 | 32 | m/c | 8/12 | USB 3.0 | 3.45×3.45 | 14.13 ×7.45 | 1″ |
| NEW acA4096-40um/uc | IMX255 | 4096×2168 | 42 | m/c | 8/12 | USB 3.0 | 3.45×3.45 | 14.13 ×7.45 | 1″ |
| NEW acA4112-20um/uc | IMX304 | 4096×3000 | 23 | m/c | 8/12 | USB 3.0 | 3.45×3.45 | 14.13 ×10.35 | 1.1″ |
| NEW acA4112-30um/uc | IMX253 | 4096×3000 | 30 | m/c | 8/12 | USB 3.0 | 3.45×3.45 | 14.13 ×10.35 | 1.1″ |

ace USB 3.0 cameras are available with C or CS-mount (depending on model).

NIR = Near Infrared Enhanced

# TECHNICAL DETAILS

## Area Scan Cameras

| Basler pulse | Sensor | Resolution (H × V pixels) | Frame Rate [fps] | Mono/ Color | Bit Depth | Interface | Pixel Size [µm²] | Sensor Size [mm²] | Optical Size |
|---|---|---|---|---|---|---|---|---|---|
| puA1280-54um/uc | AR0134 | 1280 × 960 | 54 | m/c | 8/12 | USB 3.0 | 3.75 × 3.75 | 4.80 × 3.60 | 1/3″ |
| puA1600-60um/uc | EV76C570 | 1600 × 1200 | 60 | m/c | 8/12 | USB 3.0 | 4.5 × 4.5 | 7.20 × 5.40 | 1/1.8″ |
| puA1920-30um/uc | MT9P031 | 1920 × 1080 | 30 | m/c | 8/12 | USB 3.0 | 2.2 × 2.2 | 4.22 × 2.38 | 1/3.7″ |
| puA2500-14um/uc | MT9P031 | 2592 × 1944 | 14 | m/c | 8/12 | USB 3.0 | 2.2 × 2.2 | 5.70 × 4.28 | 1/2.5″ |

pulse cameras are available with CS-mount.

## Area Scan Cameras

| Basler dart | Sensor | Resolution (H × V pixels) | Frame Rate [fps] | Mono/ Color | Bit Depth | Interface | Pixel Size [µm²] | Sensor Size [mm²] | Optical Size |
|---|---|---|---|---|---|---|---|---|---|
| daA1280-54um/uc | AR0134 | 1280 × 960 | 54 | m/c | 8/12 | USB 3.0 | 3.75 × 3.75 | 4.80 × 3.60 | 1/3″ |
| daA1600-60um/uc | EV76C570 | 1600 × 1200 | 60 | m/c | 8/12 | USB 3.0 | 4.5 × 4.5 | 7.20 × 5.40 | 1/1.8″ |
| daA1920-15um*[1] | MT9P031 | 1920 × 1080 | 15 | m | 8/12 | USB 3.0 | 2.2 × 2.2 | 4.22 × 2.38 | 1/3.7″ |
| daA1920-30um/uc | MT9P031 | 1920 × 1080 | 30 | m/c | 8/12 | USB 3.0 | 2.2 × 2.2 | 4.22 × 2.38 | 1/3.7″ |
| daA2500-14um/uc | MT9P031 | 2592 × 1944 | 14 | m/c | 8/12 | USB 3.0 | 2.2 × 2.2 | 5.70 × 4.28 | 1/2.5″ |

dart USB 3.0 cameras are available with S or CS-mount or as a bare board variant without a lens mount.

*[1] Bare board only

## Area Scan Cameras

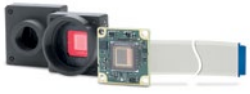

| Basler dart | Sensor | Resolution (H × V pixels) | Frame Rate [fps] | Mono/ Color | Bit Depth | Interface | Pixel Size [µm²] | Sensor Size [mm²] | Optical Size |
|---|---|---|---|---|---|---|---|---|---|
| daA1280-54lm/lc | AR0134 | 1280 × 960 | 54 | m/c | 8/12 | BCON for LVDS | 3.75 × 3.75 | 4.80 × 3.60 | 1/3″ |
| daA1600-60lm/lc | EV76C570 | 1600 × 1200 | 60 | m/c | 8/12 | BCON for LVDS | 4.5 × 4.5 | 7.20 × 5.40 | 1/1.8″ |
| daA2500-14lm/lc | MT9P031 | 2592 × 1944 | 14 | m/c | 8/12 | BCON for LVDS | 2.2 × 2.2 | 5.70 × 4.28 | 1/2.5″ |

dart BCON for LVDS cameras are available with S- or CS-mount or as a bare board variant without a lens mount.

## Area Scan Cameras

| Basler dart | Sensor | Resolution (MP, H × V pixels) | Frame Rate [fps] | Mono/ Color | Bit Depth | Interface | Pixel Size [µm²] | Sensor Size [mm²] | Optical Size |
|---|---|---|---|---|---|---|---|---|---|
| NEW daA2500-60mm/mc | AR0521 CMOS | 5 MP, 2592 × 1944 | 60 | m/c | 8 | BCON for MIPI | 2.2 × 2.2 | 5.70 × 4.30 | 1/2.5″ |

dart BCON for MIPI cameras are available with S-mount or as a bare board variant without a lens mount.

# TECHNICAL DETAILS

## Area Scan Cameras

| Basler ace classic | Sensor | Resolution (H × V pixels) | Frame Rate [fps] | Mono/ Color | Bit Depth | Interface | Pixel Size [µm²] | Sensor Size [mm²] | Optical Size |
|---|---|---|---|---|---|---|---|---|---|
| acA640-90gm/gc | ICX424 | 659 × 494 | 90 | m/c | 8/12 | GigE, PoE | 7.4 × 7.4 | 4.88 × 3.66 | 1/3″ |
| acA640-120gc | ICX618 | 658 × 492 | 120 | c | 8/12 | GigE, PoE | 5.6 × 5.6 | 3.69 × 2.77 | 1/4″ |
| acA750-30gm/gc | ICX409 | 752 × 580 | 30 | m/c | 8/12 | GigE, PoE | 6.5 × 6.25 | 4.89 × 3.64 | 1/3″ |
| acA780-75gm/gc | ICX415 | 782 × 582 | 75 | m/c | 8/12 | GigE, PoE | 8.3 × 8.3 | 6.49 × 4.83 | 1/2″ |
| acA1300-22gm/gc | ICX445 | 1296 × 966 | 22 | m/c | 8/12 | GigE, PoE | 3.75 × 3.75 | 4.86 × 3.62 | 1/3″ |
| acA1300-30gm/gc | ICX445 | 1296 × 966 | 30 | m/c | 8/12 | GigE, PoE | 3.75 × 3.75 | 4.86 × 3.62 | 1/3″ |
| acA1280-60gm/gc*1 | EV76C560 | 1282 × 1026 | 60 | m/c | 8/12 | GigE, PoE | 5.3 × 5.3 | 6.80 × 5.40 | 1/1.8″ |
| acA1300-60gm/gc*2 | EV76C560 | 1282 × 1026 | 60 | m/c | 8/12 | GigE, PoE | 5.3 × 5.3 | 6.80 × 5.40 | 1/1.8″ |
| acA1300-60gmNIR*2 | EV76C661 | 1282 × 1026 | 60 | m | 8/12 | GigE, PoE | 5.3 × 5.3 | 6.80 × 5.40 | 1/1.8″ |
| acA1600-20gm/gc | ICX274 | 1626 × 1236 | 20 | m/c | 8/12 | GigE, PoE | 4.4 × 4.4 | 7.16 × 5.44 | 1/1.8″ |
| acA1600-60gm/gc | EV76C570 | 1602 × 1202 | 60 | m/c | 8/12 | GigE, PoE | 4.5 × 4.5 | 7.20 × 5.40 | 1/1.8″ |
| acA1920-25gm/gc | MT9P031 | 1920 × 1080 | 25 | m/c | 8/12 | GigE, PoE | 2.2 × 2.2 | 4.22 × 2.38 | 1/3.7″ |
| acA2000-50gm/gc | CMV2000 | 2048 × 1088 | 50 | m/c | 8/12 | GigE, PoE | 5.5 × 5.5 | 11.26 × 5.98 | 2/3″ |
| acA2000-50gmNIR | CMV2000 | 2048 × 1088 | 50 | m | 8/12 | GigE, PoE | 5.5 × 5.5 | 11.26 × 5.98 | 2/3″ |
| acA2040-25gm/gc | CMV4000 | 2048 × 2048 | 25 | m/c | 8/12 | GigE, PoE | 5.5 × 5.5 | 11.26 × 11.26 | 1″ |
| acA2040-25gmNIR | CMV4000 | 2048 × 2048 | 25 | m | 8/12 | GigE, PoE | 5.5 × 5.5 | 11.26 × 11.26 | 1″ |
| acA2500-14gm/gc | MT9P031 | 2592 × 1944 | 14 | m/c | 8/12 | GigE, PoE | 2.2 × 2.2 | 5.70 × 4.28 | 1/2.5″ |
| acA3800-10gm/gc | MT9J003 | 3840 × 2748 | 10 | m/c | 8/12 | GigE, PoE | 1.67 × 1.67 | 6.44 × 4.62 | 1/2.3″ |
| acA4600-7gc | MT9F002 | 4608 × 3288 | 7 | c | 8/12 | GigE, PoE | 1.4 × 1.4 | 6.45 × 4.63 | 1/2.3″ |

| Basler ace U | Sensor | Resolution (H × V pixels) | Frame Rate [fps] | Mono/ Color | Bit Depth | Interface | Pixel Size [µm²] | Sensor Size [mm²] | Optical Size |
|---|---|---|---|---|---|---|---|---|---|
| acA640-300gm/gc | PYTHON 300 | 640 × 480 | 376 | m/c | 8/10 | GigE, PoE | 4.8 × 4.8 | 3.07 × 2.30 | 1/4″ |
| NEW acA720-290gm/gc | IMX287 | 720 × 540 | 293 | m/c | 8/12 | GigE, PoE | 6.9 × 6.9 | 4.97 × 3.73 | 1/2.9″ |
| acA800-200gm/gc | PYTHON 500 | 800 × 600 | 240 | m/c | 8/10 | GigE, PoE | 4.8 × 4.8 | 3.84 × 2.88 | 1/3.6″ |
| acA1300-75gm/gc | PYTHON 1300 | 1280 × 1024 | 88 | m/c | 8/10 | GigE, PoE | 4.8 × 4.8 | 6.14 × 4.92 | 1/2″ |
| NEW acA1440-73gm/gc | IMX273 | 1440 × 1080 | 73 | m/c | 8/12 | GigE, PoE | 3.45 × 3.45 | 4.97 × 3.73 | 1/2.9″ |
| acA1920-40gm/gc | IMX249 | 1920 × 1200 | 42 | m/c | 8/12 | GigE, PoE | 5.86 × 5.86 | 11.25 × 7.03 | 1/1.2″ |
| acA1920-48gm/gc | PYTHON 2000 | 1920 × 1200 | 50 | m/c | 8/10 | GigE, PoE | 4.8 × 4.8 | 9.50 × 6.08 | 2/3″ |
| acA1920-50gm/gc | IMX174 | 1920 × 1200 | 50 | m/c | 8/12 | GigE, PoE | 5.86 × 5.86 | 11.25 × 7.03 | 1/1.2″ |
| acA2040-35gm/gc | IMX265 | 2048 × 1536 | 36 | m/c | 8/12 | GigE, PoE | 3.45 × 3.45 | 7.07 × 5.30 | 1/1.8″ |
| acA2440-20gm/gc | IMX264 | 2448 × 2048 | 23 | m/c | 8/12 | GigE, PoE | 3.45 × 3.45 | 8.45 × 7.07 | 2/3″ |
| acA2500-20gm/gc | PYTHON 5000 | 2592 × 2048 | 21 | m/c | 8/10 | GigE, PoE | 4.8 × 4.8 | 12.44 × 9.83 | 1″ |
| NEW acA3088-16gm/gc | IMX178 | 3088 × 2064 | 16 | m/c | 8/12 | GigE, PoE | 2.4 × 2.4 | 7.41 × 4.95 | 1/1.8″ |
| NEW acA4024-8gm/gc | IMX226 | 4024 × 3036 | 8 | m/c | 8/12 | GigE, PoE | 1.85 × 1.85 | 7.44 × 5.62 | 1/1.7″ |

| Basler ace L | Sensor | Resolution (H × V pixels) | Frame Rate [fps] | Mono/ Color | Bit Depth | Interface | Pixel Size [µm²] | Sensor Size [mm²] | Optical Size |
|---|---|---|---|---|---|---|---|---|---|
| NEW acA4096-11gm/gc | IMX267 | 4096 × 2160 | 12 | m/c | 8/12 | GigE, PoE | 3.45 × 3.45 | 14.13 × 7.45 | 1″ |
| NEW acA4112-8gm/gc | IMX304 | 4096 × 3000 | 8 | m/c | 8/12 | GigE, PoE | 3.45 × 3.45 | 14.13 × 10.35 | 1.1″ |

ace GigE cameras are available with C or CS-mount (depending on model).

NIR = Near Infrared Enhanced

*1 rolling shutter *2 global shutter (switchable)

# TECHNICAL DETAILS

## Area Scan Cameras

| Basler aviator | Sensor | Resolution (H × V pixels) | Frame Rate [fps] | Mono/ Color | Bit Depth | Interface | Pixel Size [µm²] | Sensor Size [mm²] | Optical Size |
|---|---|---|---|---|---|---|---|---|---|
| avA1000-100gm/gc | KAI-01050 | 1024 × 1024 | 101 | m/c | 8/12 | GigE | 5.5 × 5.5 | 5.63 × 5.63 | 1/2″ |
| avA1600-50gm/gc | KAI-02050 | 1600 × 1200 | 55 | m/c | 8/12 | GigE | 5.5 × 5.5 | 8.80 × 6.60 | 2/3″ |
| avA1900-50gm/gc | KAI-02150 | 1920 × 1080 | 51 | m/c | 8/12 | GigE | 5.5 × 5.5 | 10.56 × 5.94 | 2/3″ |
| avA2300-25gm/gc | KAI-04050 | 2330 × 1750 | 26 | m/c | 8/12 | GigE | 5.5 × 5.5 | 12.85 × 9.64 | 1″ |

aviator cameras are available with C-mount.

## Area Scan Cameras

| Basler pilot | Sensor | Resolution (H × V pixels) | Frame Rate [fps] | Mono/ Color | Bit Depth | Interface | Pixel Size [µm²] | Sensor Size [mm²] | Optical Size |
|---|---|---|---|---|---|---|---|---|---|
| piA640-210gm/gc | KAI-0340 | 648 × 488 | 210 | m/c | 8/12 | GigE | 7.4 × 7.4 | 4.80 × 3.61 | 1/3″ |
| piA1000-48gm/gc | KAI-1020 | 1004 × 1004 | 48 | m/c | 8/12 | GigE | 7.4 × 7.4 | 7.43 × 7.43 | 2/3″ |
| piA1000-60gm/gc | KAI-1020 | 1004 × 1004 | 60 | m/c | 8/12 | GigE | 7.4 × 7.4 | 7.43 × 7.43 | 2/3″ |
| piA1600-35gm/gc | KAI-2020 | 1608 × 1208 | 35 | m/c | 8/12 | GigE | 7.4 × 7.4 | 11.90 × 8.94 | 1″ |
| piA1900-32gm | KAI-2093 | 1928 × 1084 | 32 | m | 12 | GigE | 7.4 × 7.4 | 14.21 × 8.02 | 1″ |
| piA2400-17gm/gc | ICX625 | 2456 × 2058 | 17 | m/c | 8/12 | GigE | 3.45 × 3.45 | 8.47 × 7.10 | 2/3″ |

pilot cameras are available with C-mount.

## Area Scan Cameras

| Basler scout | Sensor | Resolution (H × V pixels) | Frame Rate [fps] | Mono/ Color | Bit Depth | Interface | Pixel Size [µm²] | Sensor Size [mm²] | Optical Size |
|---|---|---|---|---|---|---|---|---|---|
| scA640-70gm/gc | ICX424 | 659 × 494 | 70 | m/c | 8/12 | GigE | 7.4 × 7.4 | 4.88 × 3.66 | 1/3″ |
| scA750-60gm/gc | MT9V022 | 752 × 480 | 64 | m/c | 8 | GigE | 6.0 × 6.0 | 4.51 × 2.88 | 1/3″ |
| scA1300-32gm/gc | ICX445 | 1296 × 966 | 32 | m/c | 8/12 | GigE | 3.75 × 3.75 | 4.86 × 3.62 | 1/3″ |
| scA1400-17gm/gc | ICX285 | 1392 × 1040 | 17 | m/c | 8/12 | GigE | 6.45 × 6.45 | 8.98 × 6.71 | 2/3″ |
| scA1400-30gm/gc | ICX285 | 1392 × 1040 | 30 | m/c | 8/12 | GigE | 6.45 × 6.45 | 8.98 × 6.71 | 2/3″ |
| scA1600-14gm/gc | ICX274 | 1628 × 1236 | 14 | m/c | 8/12 | GigE | 4.4 × 4.4 | 7.16 × 5.44 | 1/1.8″ |
| scA1600-28gm/gc | ICX274 | 1628 × 1236 | 28 | m/c | 8/12 | GigE | 4.4 × 4.4 | 7.16 × 5.44 | 1/1.8″ |

scout cameras are available with C-mount.

# TECHNICAL DETAILS

## Area Scan Cameras

| Basler ace classic | Sensor | Resolution (H × V pixels) | Frame Rate [fps] | Mono/ Color | Bit Depth | Interface | Pixel Size [µm²] | Sensor Size [mm²] | Optical Size |
|---|---|---|---|---|---|---|---|---|---|
| acA2000-340km/kc | CMV2000 | 2048 × 1088 | 340 | m/c | 8/10/12 | CL (full), PoCL | 5.5 × 5.5 | 11.26 × 5.98 | 2/3″ |
| acA2000-340kmNIR | CMV2000 | 2048 × 1088 | 340 | m | 8/10/12 | CL (full), PoCL | 5.5 × 5.5 | 11.26 × 5.98 | 2/3″ |
| acA2040-180km/kc | CMV4000 | 2048 × 2048 | 180 | m/c | 8/10/12 | CL (full), PoCL | 5.5 × 5.5 | 11.26 × 11.26 | 1″ |
| acA2040-180kmNIR | CMV4000 | 2048 × 2048 | 180 | m | 8/10/12 | CL (full), PoCL | 5.5 × 5.5 | 11.26 × 11.26 | 1″ |

ace Camera Link cameras are available with C-mount.

NIR = Near Infrared Enhanced

## Area Scan Cameras

| Basler aviator | Sensor | Resolution (H × V pixels) | Frame Rate [fps] | Mono/ Color | Bit Depth | Interface | Pixel Size [µm²] | Sensor Size [mm²] | Optical Size |
|---|---|---|---|---|---|---|---|---|---|
| avA1000-120km/kc | KAI-01050 | 1024 × 1024 | 120 | m/c | 8/10/12 | CL (base) | 5.5 × 5.5 | 5.63 × 5.63 | 1/2″ |
| avA1600-65km/kc | KAI-02050 | 1600 × 1200 | 67 | m/c | 8/10/12 | CL (base) | 5.5 × 5.5 | 8.80 × 6.60 | 2/3″ |
| avA1900-60km/kc | KAI-02150 | 1920 × 1080 | 62 | m/c | 8/10/12 | CL (base) | 5.5 × 5.5 | 10.56 × 5.94 | 2/3″ |
| avA2300-30km/kc | KAI-04050 | 2330 × 1750 | 31 | m/c | 8/10/12 | CL (base) | 5.5 × 5.5 | 12.85 × 9.64 | 1″ |

aviator Camera Link cameras are available with C-mount.

## Area Scan Cameras

| Basler beat | Sensor | Resolution (H × V pixels) | Frame Rate [fps] | Mono/ Color | Bit Depth | Interface | Pixel Size [µm²] | Sensor Size [mm²] | Optical Size |
|---|---|---|---|---|---|---|---|---|---|
| beA4000-62km | CMV12000 | 4096 × 3072 | 62 | m | 8/10/12 | CL (full) | 5.5 × 5.5 | 22.53 × 16.90 | 1.75″ |
| beA4000-62kc | CMV12000 | 4088 × 3070 | 62 | c | 8/10/12 | CL (full) | 5.5 × 5.5 | 22.53 × 16.90 | 1.75″ |

Basler beat cameras are available with F-, M42 × 1-, M58 × 0,75-, M42 × 0.75-mount.

## Line Scan Cameras

| Basler racer | Sensor | Resolution | Line Rate [kHz] | Mono/ Color | Bit Depth | Interface | Pixel Size [µm²] | Sensor Length [mm] |
|---|---|---|---|---|---|---|---|---|
| raL2048-48gm | DR-2k-7 | 2048 | 51 | m | 8/12 | GigE | 7.0 × 7.0 | 14.3 |
| raL4096-24gm | DR-4k-7 | 4096 | 26 | m | 8/12 | GigE | 7.0 × 7.0 | 28.7 |
| raL6144-16gm | DR-6k-7 | 6144 | 17 | m | 8/12 | GigE | 7.0 × 7.0 | 43.0 |
| raL8192-12gm | DR-8k-3.5 | 8192 | 12 | m | 8/12 | GigE | 3.5 × 3.5 | 28.7 |
| raL12288-8gm | DR-12k-3.5 | 12288 | 8 | m | 8/12 | GigE | 3.5 × 3.5 | 43.0 |

racer cameras are available with C-, F-, M42 × 1-, M42 × 0.75-mount.

# TECHNICAL DETAILS

## Line Scan Cameras

| Basler runner | Sensor | Resolution | Line Rate [kHz] | Mono/ Color | Bit Depth | Interface | Pixel Size [µm²] | Sensor Length [mm] |
|---|---|---|---|---|---|---|---|---|
| ruL2098-10gc | KLI-2113 | 3×2098 | 9.2 | c | 8/12 | GigE | 14.0×14.0 | 29.37 |

runner cameras are available with F-mount.

## Line Scan Cameras

| Basler racer | Sensor | Resolution | Line Rate [kHz] | Mono/ Color | Bit Depth | Interface | Pixel Size [µm²] | Sensor Length [mm] |
|---|---|---|---|---|---|---|---|---|
| raL2048-80km | DR-2k-7 | 2048 | 80 | m | 8/10/12 | CL*1 | 7.0×7.0 | 14.3 |
| raL4096-80km | DR-4k-7 | 4096 | 80 | m | 8/10/12 | CL*2 | 7.0×7.0 | 28.7 |
| raL6144-80km | DR-6k-7 | 6144 | 80 | m | 8/10/12 | CL (full) | 7.0×7.0 | 43.0 |
| raL8192-80km | DR-8k-3.5 | 8192 | 80 | m | 8/10/12 | CL (full) | 3.5×3.5 | 28.7 |
| raL12288-66km | DR-12k-3.5 | 12288 | 66 | m | 8/10/12 | CL (full) | 3.5×3.5 | 43.0 |

racer cameras are available with C-, F-, M42×1-, M42×0.75-mount.

*1 CL (base), PoCL, *2 CL (medium), PoCL

## Line Scan Cameras

| Basler sprint | Sensor | Resolution | Line Rate [kHz] | Mono/ Color | Bit Depth | Interface | Pixel Size [µm²] | Sensor Length [mm] |
|---|---|---|---|---|---|---|---|---|
| spL2048-39kc | Dual Line CMOS | 2048 | 38.6 | c | 8/10/12 | CL (base) | 10.0×10.0 | 20.48 |
| spL2048-50km/kc | Dual Line CMOS | 2048 | 50 | m/c | 8/10/12 | CL*1 | 10.0×10.0 | 20.48 |
| spL2048-70km/kc | Dual Line CMOS | 2048 | 70 | m/c | 8/10/12 | CL*1 | 10.0×10.0 | 20.48 |
| spL2048-140km | Dual Line CMOS | 2048 | 140 | m | 8/10/12 | CL (b/m/f) | 10.0×10.0 | 20.48 |
| spL4096-39km/kc | Dual Line CMOS | 4096 | 38.6 | m/c | 8/10/12 | CL (b/m/f) | 10.0×10.0 | 40.96 |
| spL4096-50km/kc | Dual Line CMOS | 4096 | 50 | m/c | 8/10/12 | CL (b/m/f) | 10.0×10.0 | 40.96 |
| spL4096-70km/kc | Dual Line CMOS | 4096 | 70 | m/c | 8/10/12 | CL (b/m/f) | 10.0×10.0 | 40.96 |
| spL4096-140km/kc | Dual Line CMOS | 4096 | 140 | m/c | 8/10/12 | CL (b/m/f) | 10.0×10.0 | 40.96 |
| spL8192-39kc | Dual Line CMOS | 8192 | 38.6 | c | 8/10/12 | CL (b/m/f) | 10.0×10.0 | 81.92 |
| spL8192-39kcCl*2 | Dual Line CMOS | 8192 | 38.6 | c | 8/10/12 | CL (b/m/f) | 10.0×10.0 | 81.92 |
| spL8192-50km | Dual Line CMOS | 8192 | 50 | m | 8/10/12 | CL (b/m/f) | 10.0×10.0 | 81.92 |
| spL8192-70km | Dual Line CMOS | 8192 | 70 | m | 8/10/12 | CL (b/m/f) | 10.0×10.0 | 81.92 |

sprint cameras are available with F-, V- or M42×1-mount (depending on model).

*1 Mono: base, Color: base/medium/full, *2 with Color Improvement Feature, without Line Stamp Feature

# TECHNICAL DETAILS

## Line Scan Cameras

| Basler Line Scan | Sensor | Resolution | Line Rate [kHz] | Mono/ Color | Bit Depth | Interface | Pixel Size [µm²] | Sensor Length [mm] |
|---|---|---|---|---|---|---|---|---|
| L301k/kc | Tri-linear CCD | 3×2098 | 9.2 | m/c | 8/10 | CL (base) | 14.0×14.0 | 29.37 |
| L304k/kc | Tri-linear CCD | 3×4080 | 7.2 | m/c | 8/10 | CL (base) | 10.0×10.0 | 40.80 |

L300 cameras are available with F- or M58×0,75-mount (depending on model).

## 3D Cameras

| Basler ToF Camera | Sensor | Resolution | Frame Rate [fps] | Mono/ Color | Type | Interface | Accuracy | Working Range |
|---|---|---|---|---|---|---|---|---|
| tof640-20gm_850nm | Panasonic | 640×480 | 20 | m | NIR | GigE | +/- 1 cm* | 0 m to 13 m |

*Scene dependent: in a range of 0.5 m to 5.8 m, based on a flat white target with over 90% reflectivity, in a room with zero ambient light at 22°C, in factory settings mode, looking at the center of the range image.

## IP Cameras

| IP Fixed Box | Sensor | Resolution | Max. Frame Rate [fps] | Interface | Pixel Size [µm²] | Optical Size | Video Compression | Lens Mount | Day/ Night |
|---|---|---|---|---|---|---|---|---|---|
| BIP2-1000c | CCD | 1024×768 | 30 | Fast Ethernet | 4.65×4.65 | 1/3″ | MJPEG, MPEG-4, H.264 | CS-mount, DC iris | --- |
| BIP2-1000c-dn | CCD | 1024×768 | 30 | Fast Ethernet | 4.65×4.65 | 1/3″ | MJPEG, MPEG-4, H.264 | CS-mount, DC iris | Movable IR-cut filter |
| BIP2-1300c | CCD | 1280×960 | 30 | Fast Ethernet | 3.75×3.75 | 1/3″ | MJPEG, MPEG-4, H.264 | CS-mount, DC iris | --- |
| BIP2-1300c-dn | CCD | 1280×960 | 30 | Fast Ethernet | 3.75×3.75 | 1/3″ | MJPEG, MPEG-4, H.264 | CS-mount, DC iris | Movable IR-cut filter |
| BIP2-1600c | CCD | 1600×1200 | 12.5 | Fast Ethernet | 4.40×4.40 | 1/1.8″ | MJPEG, MPEG-4, H.264 | CS-mount, DC iris | --- |
| BIP2-1600c-dn | CCD | 1600×1200 | 12.5 | Fast Ethernet | 4.40×4.40 | 1/1.8″ | MJPEG, MPEG-4, H.264 | CS-mount, DC iris | Movable IR-cut filter |
| BIP2-1600-25c | CCD | 1600×1200 | 25 | Fast Ethernet | 4.40×4.40 | 1/1.8″ | MJPEG, MPEG-4, H.264 | CS-mount, DC iris | --- |
| BIP2-1600-25c-dn | CCD | 1600×1200 | 25 | Fast Ethernet | 4.40×4.40 | 1/1.8″ | MJPEG, MPEG-4, H.264 | CS-mount, DC iris | Movable IR-cut filter |
| BIP2-1280c | CMOS | 1280×720 | 30 | Fast Ethernet | 3.30×3.30 | 1/3″ | MJPEG, MPEG-4, H.264 | CS-mount, DC iris | --- |
| BIP2-1280c-dn | CMOS | 1280×720 | 30 | Fast Ethernet | 3.30×3.30 | 1/3″ | MJPEG, MPEG-4, H.264 | CS-mount, DC iris | Movable IR-cut filter |
| BIP2-1920c | CMOS | 1920×1080 | 30 | Fast Ethernet | 2.20×2.20 | 1/3″ | MJPEG, MPEG-4, H.264 | CS-mount, DC iris | --- |
| BIP2-1920c-dn | CMOS | 1920×1080 | 30 | Fast Ethernet | 2.20×2.20 | 1/3″ | MJPEG, MPEG-4, H.264 | CS-mount, DC iris | Movable IR-cut filter |
| BIP2-1920-30c | CMOS | 1920×1080 | 30 | Fast Ethernet | 5.86×5.86 | 1/1.3″ | MJPEG, MPEG-4, H.264 | C-mount, DC iris | --- |
| BIP2-2500c | CMOS | 2560×1920 | 15 (3 MP) | Fast Ethernet | 2.20×2.20 | 1/2.5″ | MJPEG, MPEG-4, H.264 | CS-mount, DC iris | --- |
| BIP2-2500c-dn | CMOS | 2560×1920 | 15 (3 MP) | Fast Ethernet | 2.20×2.20 | 1/2.5″ | MJPEG, MPEG-4, H.264 | CS-mount, DC iris | Movable IR-cut filter |

# TECHNICAL DETAILS

## Basler Cameras for Medical & Life Sciences

| NEW Basler MED ace | Sensor | Resolution (H×V pixels) | Frame Rate [fps] | Mono/ Color | Interface | Pixel Size [µm²] | Sensor Size [mm²] | Optical Size |
|---|---|---|---|---|---|---|---|---|
| Basler MED ace 2.3 MP 41 color/mono | IMX 249 | 1920×1200 | 41 fps | m/c | USB 3.0 | 5.86×5.86 | 11.25×7.03 | 1/1.2″ |
| Basler MED ace 2.3 MP 164 color/mono | IMX 174 | 1920×1200 | 164 fps | m/c | USB 3.0 | 5.86×5.86 | 11.25×7.03 | 1/1.2″ |
| Basler MED ace 5.1 MP 35 color/mono | IMX 264 | 2448×2048 | 35 fps | m/c | USB 3.0 | 3.45×3.45 | 8.45×7.07 | 2/3″ |
| Basler MED ace 5.1 MP 75 color/mono | IMX 250 | 2448×2048 | 75 fps | m/c | USB 3.0 | 3.45×3.45 | 8.45×7.07 | 2/3″ |
| Basler MED ace 5.3 MP 20 color/mono | PYTHON 5000 | 2592×2048 | 20 fps | m/c | GigE | 4.80×4.80 | 12.44×9.83 | 1″ |
| Basler MED ace 8.9 MP 32 color/mono | IMX 267 | 4096×2168 | 32 fps | m/c | USB 3.0 | 3.45×3.45 | 14.13×7.45 | 1″ |
| Basler MED ace 8.9 MP 42 color/mono | IMX 255 | 4096×2168 | 42 fps | m/c | USB 3.0 | 3.45×3.45 | 14.13×7.45 | 1″ |
| Basler MED ace 12.3 MP 23 color/mono | IMX 304 | 4096×3000 | 23 fps | m/c | USB 3.0 | 3.45×3.45 | 14.13×10.35 | 1.1″ |
| Basler MED ace 12.3 MP 30 color/mono | IMX 253 | 4096×3000 | 30 fps | m/c | USB 3.0 | 3.45×3.45 | 14.13×10.35 | 1.1″ |
| PLANNED Basler MED ace 20.0 MP 17 color/mono | IMX 183 | 5544×3964* | 17 fps* | m/c | USB 3.0 | 2.40×2.40* | 13.30×9.51* | 1″ |

The Basler MED ace cameras are available with C-mount.

With the certification according to DIN EN ISO 13485:2016, Basler has proven its quality standards for the development, production, distribution and service of digital cameras as well as for placing them on the market.

ISO 13485:2016

The Basler MED ace cameras incorporate unique Basler MED feature sets: Easy Compliance, Brilliant Image, Perfect Color, Low Light Imaging, High Speed and Industrial Excellence. They combine market-leading hardware, firmware and software features.
For more information please visit *www.baslerweb.com/BaslerMEDace*

*preliminary

# TECHNICAL DETAILS

## Basler Cameras for Medical & Life Sciences

| PowerPack for Microscopy | Sensor | Resolution (H×V pixels) | Frame Rate [fps] | Mono/ Color | Dynamic Range [dB] | Interface | Pixel Size [µm²] | Active Area [mm] | Optical Size |
|---|---|---|---|---|---|---|---|---|---|
| Microscopy pulse 1.2MP | ON Semi-conductor | 1280×960 | 54 | c | 64 | USB 3.0 | 3.75×3.75 | 6.00 | 1/3″ |
| Microscopy pulse 2.0MP | ON Semi-conductor | 1920×1080 | 30 | c | 70.1 | USB 3.0 | 2.20×2.20 | 4.85 | 1/3.7″ |
| Microscopy pulse 3.3MP | ON Semi-conductor | 2048×1584 | 20 | c | 70.1 | USB 3.0 | 2.20×2.20 | 5.7 | 1/3″ |
| Microscopy pulse 5.0MP | ON Semi-conductor | 2592×1944 | 14 | c | 70.1 | USB 3.0 | 2.20×2.20 | 7.13 | 1/2.5″ |
| Microscopy ace 1.3MP 48 | Sony PREGIUS | 1280×1024 | 48 | c | 73 | USB 3.0 | 5.86×5.86 | 9.60 | 1/1.8″ |
| Microscopy ace 1.3MP 145 | ON Semi-conductor | 1280×1024 | 145 | c | 56.2 | USB 3.0 | 4.80×4.80 | 7.90 | 1/2″ |
| Microscopy ace 1.3MP 200 | ON Semi-conductor | 1280×1024 | 200 | m | 56.3 | USB 3.0 | 4.80×4.80 | 7.90 | 1/2″ |
| NEW Microscopy ace 2.3 MP Mono | Sony PREGIUS | 1920×1200 | 40 | m | 73.0 | USB 3.0 | 5.86×5.86 | 13.30 | 1/1.2″ |
| Microscopy ace 2.3 MP Color | Sony PREGIUS | 1920×1200 | 40 | c | 73 | USB 3.0 | 5.86×5.86 | 13.30 | 1/1.2″ |
| Microscopy ace 3.2 MP | Sony PREGIUS | 2048×1536 | 55 | c | 71.4 | USB 3.0 | 3.45×3.45 | 9.00 | 1/1.8″ |
| NEW Microscopy ace 5.1 MP Mono | Sony PREGIUS | 2448×2048 | 35 | m | 70.6 | USB 3.0 | 3.45×3.45 | 11.20 | 2/3″ |
| Microscopy ace 5.1 MP Color | Sony PREGIUS | 2448×2048 | 35 | c | 70.6 | USB 3.0 | 3.45×3.45 | 11.20 | 2/3″ |
| NEW Microscopy ace 12.2 MP | Sony Starvis | 4024×3036 | 15 | c | 70.6 | USB 3.0 | 1.85×1.85 | 9.30 | 1/1.7″ |

Basler Microscopy ace cameras are available with C-mount. Basler Microscopy pulse cameras are available with CS-mount, and are delivered with a CS- to C-mount adapter ring.

The Basler Microscopy Cameras are the centerpiece of Basler's PowerPack for Microscopy which delivers all the necessary components for a straightforward setup and easy installation, including the Basler Microscopy Software for camera control, image acquisition, processing, analysis and documentation. These cameras cannot be ordered separately from the Basler PowerPack for Microscopy.
For more information please visit *www.baslerweb.com/MicroscopyPowerPack*

# TECHNICAL DETAILS

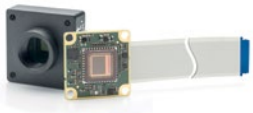

## Basler Embedded Vision Kits

| Embedded Vision | Camera | Interface | Sensor | Resolution (HxV pixels) | Frame Rate [fps] | Mono/ Color | Lens | Processing Board |
|---|---|---|---|---|---|---|---|---|
| dart USB Evaluation Kit | daA2500-14uc | USB 3.0 | MT9P031 | 2592x1944 | 14 | c | Evetar M12B0816W F1,6 f8 mm, 1/2 | - |
| dart BCON for LVDS Development Kit | daA2500-14lc | BCON for LVDS | MT9P031 | 2592x1944 | 14 | c | Evetar M12B0816W F1,6 f8 mm, 1/2 | AVNET 7010 MicroZed SOM |

All Embedded Vision Kits come with a suitable cable and our free pylon Camera Software Suite. The dart BCON for LVDS Development Kit includes an additional processing board.

# BASLER´S COMPONENTS

## Basler´s Components Enhance Your Vision

**Basler offers you extensively tested cables and lenses, which are optimized for use with our Basler cameras. Our cooperation with certified suppliers facilitates the operation of a high-performance image processing system.**

An image processing system needs more than just a camera, lens and light source. A stable vision system also requires accessories for handling data transfer.

Basler offers a wide variety of accessories such as lenses, I/O cables, power supplies, data cables, host adapter cards, hubs or switches designed to help you get the most out of your camera. To ensure full compatibility, all accessories are tested with our cameras. Cables and power supplies are all EMC tested for industrial conditions by our support team.

## Basler Original Equipment

The accessories market for machine vision cameras is broad and deep. Therefore, Basler offers products specially developed for our cameras, meaning camera and lens or cables harmonize perfectly with one another. The products are produced exclusively for us and are available only from Basler. All products with the Basler Original Equipment seal allow top performance when combined with Basler cameras.

### Why Components from Basler?

- Perfect match with our Basler cameras
- Extensive and qualified portfolio
- One-stop-shopping for your image processing system
- Performance stability through premium quality standards
- Qualified selection of components avoids changes in existing systems
- Professional consultancy during preselection

## USB 3.0 Accessories from Basler

Especially with a USB 3.0 interface, it is important to think about the right accessories to achieve stability in a system with one or more cameras. In particular USB 3.0 accessories from the consumer sector may lead to major disadvantages for the user, as they are not designed to handle the higher demands of machine vision applications.

Our portfolio of USB 3.0 accessories covers a broad selection of cables, host adapter cards and a USB 3.0 hub.

### Your Benefits Through USB 3.0 Accessories:

- High stability of your USB 3.0 set up
- Simple integration into all image processing applications
- Tested USB 3.0 accessories with reliable premium quality for industrial applications
- Carefully selected accessories for a perfect match
- Plug and play functionality

**Have a look at the matching components for your camera model at**
**www.baslerweb.com/accessories**

### Typcial set-up of a camera system:

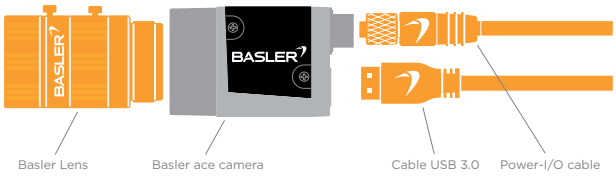

# BASLER´S COMPONENTS

## Basler Lenses

With more and more lens suppliers entering the market, choosing the optimal lens becomes more and more challenging. Traditionally, decisions were based on a trade-off between the best possible quality and a matching price-performance ratio, but a third factor is gaining importance: the supplier's reliability.

Basler Lenses offer exceptional value in all three areas. In addition, the competitive purchase price is augmented by reduced transaction costs, as you reduce the number of vendors in your supply chain.

### Basler Lenses 1/2.5"

The ideal match for sensors smaller than 1/2" is the **Basler Original Equipment** lens line of high performance lenses. Specially designed for Basler cameras, these lenses deliver exceptionally high resolution and facilitate a sharp image from the center of the frame to the corners.

#### Highlights of the Basler Lenses 1/2.5"

- Exceptionally high resolution of 5 MP to bring out the smallest details in your image
- An orange dot on the iris range indicates the optimal aperture to easily achieve the sharpest image
- Space-saving size
- Designed in cooperation with Fujinon, global leaders in optical manufacturing
- These Basler Lenses 1/2.5" are the perfect addition for Basler ace, dart and pulse cameras with sensors sized smaller than 1/2" and high resolution
- Basler Original quality promise

### Basler Lenses 2/3"

The standard Basler lens series for sensor sizes up to 2/3" is designed for bigger sensors and a common resolution of up to 2 MP. Thus, they are particularly suitable for applications where a lower resolution is sufficient. Moreover, with their excellent price/performance ratio, they enable a cost-effective vision system.

#### Highlights of the Basler Lenses 2/3"

- Suitable resolution for cost efficient machine vision applications
- Optimized design focused on the most important features for quick and easy use
- Produced by a qualified, trusted lens manufacturer
- Basler Lenses 2/3" are a good match for Basler ace, dart and pulse cameras with sensors sized greater than 1/2" up to 2/3" and standard resolution of up to 2 MP

# BASLER´S COMPONENTS

| Basler Lenses 1/2.5" | C125-0418-5M | C125-0618-5M | C125-0818-5M | C125-1218-5M | C125-1620-5M | C125-2522-5M |
|---|---|---|---|---|---|---|
| Maximum image circle | 1/2.5" (7.3 mm) | | | | | |
| Mount | C-mount | | | | | |
| Focal length | 4 mm | 6 mm | 8 mm | 12 mm | 16 mm | 25 mm |
| Maximum relative aperture | 1:1.8 | | | | 1:2.0 | 1:2.2 |

Specifications are subject to change without prior notice. Latest specifications can be found on www.baslerweb.com/manuals.

For availability please refer to our website www.baslerweb.com/lenses

PRELIMINARY PLANNED

| Basler Lenses 2/3" | C23-0816-2M | C23-1216-2M* | C23-1616-2M* | C23-2518-2M | C23-3520-2M | C23-5026-2M |
|---|---|---|---|---|---|---|
| Maximum image circle | 2/3" (11 mm) | | | | | |
| Mount | C-mount | | | | | |
| Focal length | 8 mm | 12 mm | 16 mm | 25 mm | 35 mm | 50 mm |
| Maximum relative aperture | 1:1.6 | | | 1:1.8 | 1:2.0 | 1:2.5 |

Specifications are subject to change without prior notice. Latest specifications can be found on www.baslerweb.com/manuals.

* vignetting visible

For availability please refer to our website www.baslerweb.com/lenses

## Need help selecting the right lens for your application?

Our Lens Selector makes it easy to search for the right lens for your Basler area scan camera. The Lens Selector is built around a complex set of calculations, but from the user standpoint it is remarkably easy to use: Visitors to *www.baslerweb.com/lens-selector* can enter the pertinent data for their application (such as necessary angle of view, working distance, object size, etc.). The Lens Selector then calculates the necessary focal length and proposes suitable lenses for the size and resolution of the sensor.

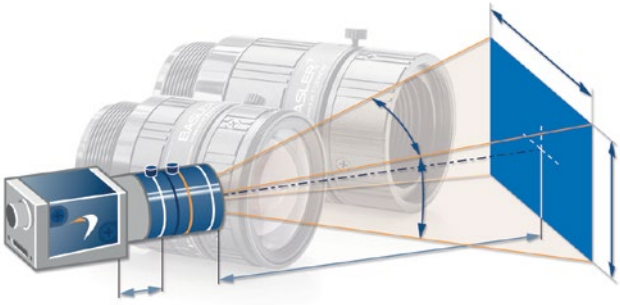

**Get your free version: www.baslerweb.com/pylon**

## Basler pylon Camera Software Suite

**The pylon Camera Software Suite operates with all Basler line scan and area scan cameras - no matter what interface they use. It offers stable, reliable and flexible data exchange between Basler cameras and PCs, for Windows and Linux on x86 and ARM based systems – at a very low CPU load.**

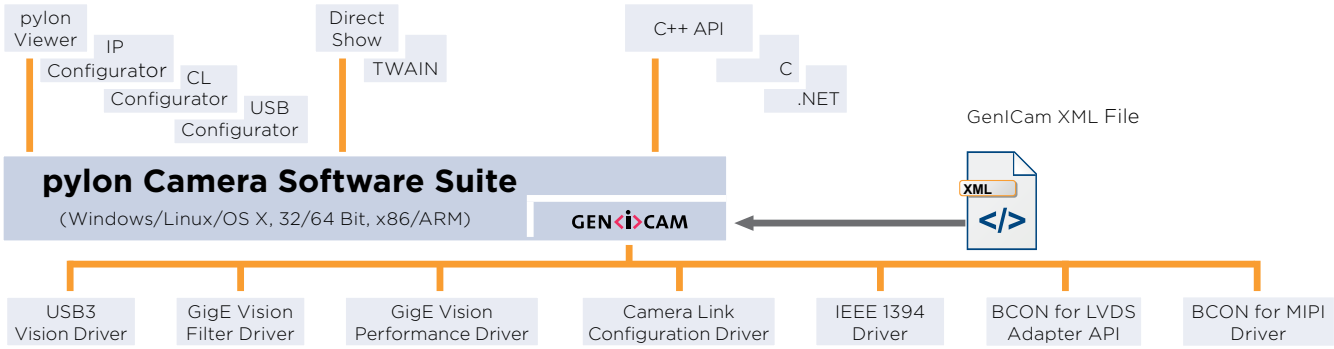


The architecture of the pylon Camera Software Suite is based on GenICam Technology, which offers you easy access to the newest camera models and the latest features. Changes to an existing camera device in your application essentially become a plug-and-play process.

An easy-to-use set of tools lets you configure the camera's interface. Use the **pylon Viewer** to set camera parameters, to capture and display images, and to evaluate the camera.

The **pylon USB3 Vision Driver** fully supports the USB3 Vision standard. It allows Basler USB 3.0 cameras to use the full speed and bandwidth of USB 3.0 for image transmission while reducing resource load and using off-the-shelf hardware components.

The **pylon GigE Vision Drivers** quickly separate incoming packets carrying image data from other traffic on the network and make the data available for use by your vision application while requiring the lowest CPU resources.

The pylon **IEEE 1394b Driver** gives you access to a well-established interface technology, and the pylon **Camera Link Configuration Driver** offers comfortable access to all camera parameters of Basler's latest Camera Link families ace, aviator, and racer.

The **BCON Adapter API** allows easy implementation of an adapter to communicate with the systems $I^2C$ interface. A ready to use sample adapter implementation is also provided.

The **MIPI Driver Package** offers plug and play experience with Basler MIPI-CSI-2 camera modules for supported plaltforms

The pylon Camera Software Suite also contains a powerful SDK that supports any type of application development. The pylon package contains the following main modules. Each one can be individually selected/unselected during the installation process, preventing the installation of unneeded modules on your system:

- USB3 Vision Driver
- GigE Vision Filter Driver
- GigE Vision Performance Driver
- IEEE 1394 Driver
- BCON Adapter API
- MIPI Driver Package
- Camera Link Serial Communication Driver
- pylon Viewer
- SDK for all cameras; C, C++, .NET (C#, VB.NET, ...); the 'pylon for Linux' version only supports the GigE and USB 3.0 interface via a C++ API

The pylon Camera Software Suite can be downloaded for free at *www.baslerweb.com/pylon*. For more information on the installation process, refer to the pylon Installation Guide. The helpful pylon Release Notes contain all improvements and bug fixes since the first pylon version.

# BASLER WORLDWIDE

We maintain a worldwide network of subsidiaries, offices and distributors to ensure that Basler customers always have a knowledgeable contact person in their area.

## North, Middle, South America

7 **Basler, Inc. USA**
**Exton (Subsidiary)**
Tel. +1 610 280 0171
sales.usa@baslerweb.com

8 **Basler Office Canada**
**Toronto**
**Rob Karimi**
Tel. +1 484 840 7214
rob.karimi@baslerweb.com

## Europe, Middle East, Africa

1 **Basler AG Headquarters**
**Germany, Ahrensburg**
Tel. +49 4102 463 500
sales.europe@baslerweb.com

2 **Basler Office Benelux**
**Cor Valk**
Tel. +31 6 83 99 20 56
cor.valk@baslerweb.com

3 **Basler Office UK & IRL**
**Reading**
**Mark Williams**
Tel. +44 7868 844 808
mark.williams@baslerweb.com

4 **Basler Office RU, BY & UA**
**Chernogolovka**
**Victor Egorov**
Tel. +7 916 813 39 83
victor.egorov@baslerweb.com

5 **Basler Office PL, CZ & SK**
**Warsaw**
**Michal Wasilewski**
Tel. +48 504 990 494
michal.wasilewski@baslerweb.com

6 **Basler Office FRA**
**Vincent Prevost**
Tel. +33 632 306 534
vincent.prevost@baslerweb.com

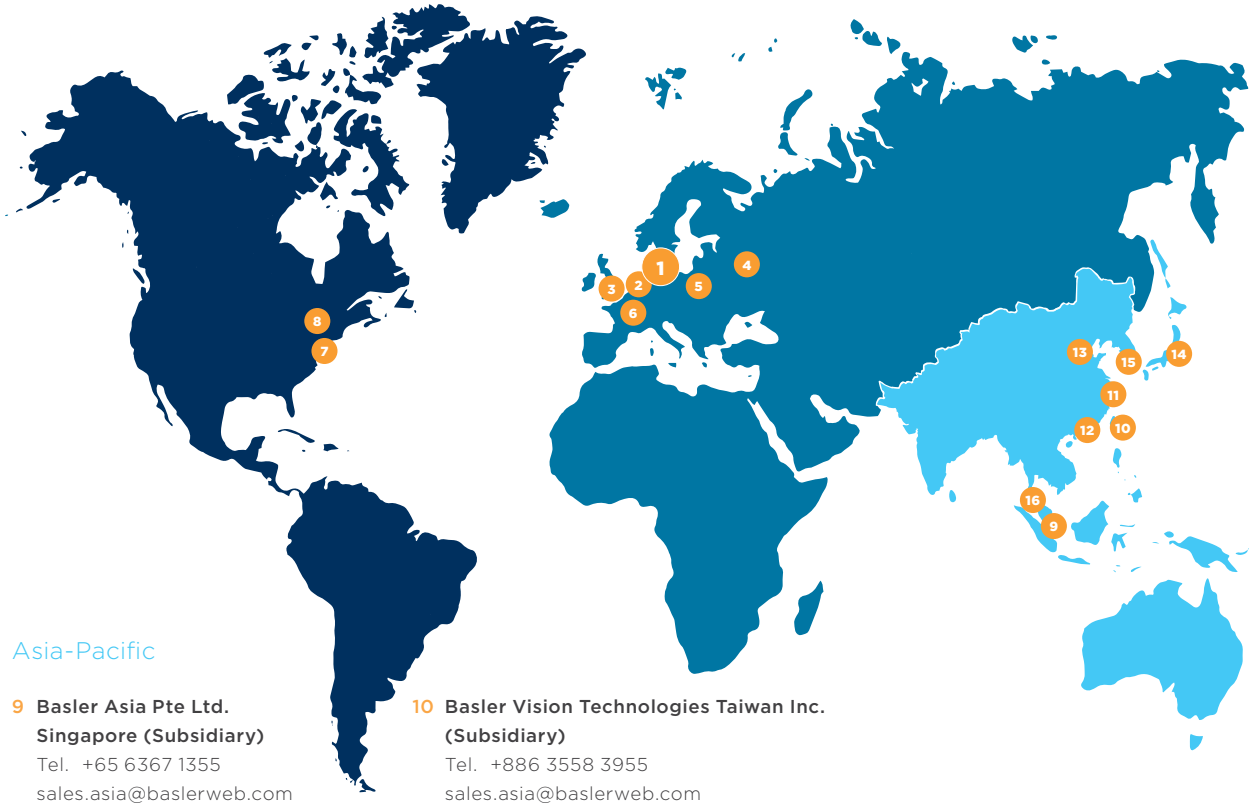


## Asia-Pacific

9 **Basler Asia Pte Ltd.**
**Singapore (Subsidiary)**
Tel. +65 6367 1355
sales.asia@baslerweb.com

10 **Basler Vision Technologies Taiwan Inc.**
**(Subsidiary)**
Tel. +886 3558 3955
sales.asia@baslerweb.com

11 **Basler China**
**Shanghai (Representative Office)**
Tel. +86 21 6230 2160
sales.asia@baslerweb.com

12 **Basler Office China**
**Shenzhen**
Tel. +86 186 8031 6909
sales.asia@baslerweb.com

13 **Basler Office China**
**Beijing**
Tel. +86 137 187 469 17
sales.asia@baslerweb.com

14 **Basler Japan**
**Tokyo (Representative Office)**
Tel. +81 3 6402 4350
sales.asia@baslerweb.com

15 **Basler Korea**
**Seoul (Representative Office)**
Tel. +82 707 1363 114
sales.asia@baslerweb.com

16 **Basler Office Malaysia**
**Penang**
Tel. +60 124 237 089
sales.asia@baslerweb.com

# OTHER INFORMATION

## How Does Basler Measure and Define Image Quality?

1288 EMVA Standard Compliant

Basler is leading the effort to standardize image quality and sensitivity measurement for cameras and sensors. We are giving the EMVA 1288 standard our strongest support because it describes a unified method to measure, compute, and present the specification parameters for cameras and image sensors. Our cameras are characterized and measured in 100% compliance with the EMVA 1288 standard. Measurement reports can be downloaded from our website.

## How Does Basler Ensure Superior Quality and Reliable High Performance?

Our approach to quality assurance is rigorous: we continually audit all facets of our business to ensure powerful performance, increase efficiency and reduce costs for our customers. We are compliant with all major quality standards including ISO 9001, CE, RoHS, and more. To ensure consistently high product quality, we employ several quality inspection procedures during manufacturing.

Every Basler camera is subjected to exhaustive optical and mechanical tests before leaving the factory. We have developed a unique combination of optics, hardware, and software tools that can quickly and efficiently calibrate a camera and measure its performance against a set of standard performance criteria. Regardless of what technology or camera model you choose you can be assured of consistent performance.

## 3-Year Warranty

Basler offers a 3-year warranty for their cameras and Basler Lenses 1/2.5". We make this unprecedented promise because we have unparalleled confidence in our products. We continually reinvest in research, development and superior manufacturing capabilities so that our customers can fully rely on the products we manufacture.

## About Basler

Basler is a leading manufacturer of high-quality digital cameras and accessories for industry, medicine, traffic and a variety of other markets. The company's product portfolio encompasses area scan and line scan cameras in compact housing dimensions, camera modules in board level variants for embedded solutions, and 3D cameras. The catalog is rounded off by our user-friendly pylon SDK and a broad spectrum of accessories, including a number developed specially for Basler and optimally harmonized for our cameras .

Basler has 30 years of experience in computer vision. The company is home to approximately 500 employees at its headquarters in Ahrensburg, Germany, and its subsidiaries and sales offices in Europe, Asia, and North America.

Basler AG Germany, Headquarters

©Basler AG, No. 58, 03/2018
ID 2000030024

BASLER
the power of sight