DATA SHEET

# Surface-Mount Mixer and Detector Schottky Diodes

## Applications

- Sensitive RF and microwave detector circuits
- Sampling and mixer circuits
- High-volume wireless
- Wi-Fi and mobile
- Low-noise receivers in high-sensitivity ID tags
- Radio designs

## Features

- Tight parameter distribution
- Available as singles, pairs, and dual pairs
- Packages rated MSL1, 260 °C per JEDEC J-STD-020

Skyworks Green™ products are compliant with all applicable legislation and are halogen-free. For additional information, refer to *Skyworks Definition of Green™*, document number SQ04–0074.

## Description

These low-cost, surface-mountable, plastic-packaged silicon mixer Schottky diodes are designed for RF and microwave mixers and detectors. They include low-barrier diodes and zero-bias detectors that combine Skyworks advanced semiconductor technology with low-cost packaging techniques. All diodes are 100 percent DC tested and deliver tight parameter distribution, which minimizes performance variability.

These diodes are available in SOD-882, SC-79, and SOT-23 packages. Wiring configurations include singles, series pairs, and reverse series pairs. They may be used at frequencies up to 24 GHz.

Table 1 describes the various packages and marking of the mixer and detector Schottky diodes.

**Table 1. Schottky Diode Packaging and Marking**

| | | | | |
|---|---|---|---|---|
| Single | Single | Series Pair | Reverse Series Pair | Single |
| SC-79<br>Green™ | SOT-23 | SOT-23 | SOT-23 | SOD-882<br>Green™ |
| | | | | |
| ♦ **SMS7621-079LF**<br>Marking: Cathode and SA | **SMS7621-001LF**<br>Green™<br>Marking: XH1 | ♦ **SMS7621-005LF**<br>Green™<br>Marking: XH2 | ♦ **SMS7621-006LF**<br>Green™<br>Marking: XH8 | **SMS7621-040LF**<br>Marking: E |
| ♦ **SMS7630-079LF**<br>Marking: Anode and SC | | **SMS7630-005LF**<br>Green™<br>Marking: XD2 | ♦ **SMS7630-006LF**<br>Green™<br>Marking: XD8 | **SMS7630-040LF**<br>Marking: P |
| $L_S$ = 0.7 nH | $L_S$ = 1.5 nH | $L_S$ = 1.5 nH | $L_S$ = 1.5 nH | $L_S$ = 0.45 nH |

## Electrical and Mechanical Specifications

The absolute maximum ratings of the mixer and detector Schottky diodes are provided in Table 2. Electrical specifications are provided in Tables 3 and 4. The associated SPICE model parameters are provided in Table 5. A typical detector schematic diagram is shown in Figure 1.

Typical performance characteristics are illustrated in Figures 2 and 3. Package dimensions are shown in Figures 4 to 8 (even numbers), and tape and reel dimensions are provided in Figures 5 to 9 (odd numbers).

## Package and Handling Information

Instructions on the shipping container label regarding exposure to moisture after the container seal is broken must be followed. Otherwise, problems related to moisture absorption may occur when the part is subjected to high temperature during solder assembly.

The mixer and detector Schottky diodes are rated to Moisture Sensitivity Level 1 (MSL1) at 260 °C for 5 seconds. They can be used for lead or lead-free soldering. For additional information, refer to the Skyworks Application Note, *Solder Reflow Information*, document number 200164.

Care must be taken when attaching this product, whether it is done manually or in a production solder reflow environment. Production quantities of this product are shipped in a standard tape and reel format.

**Table 2. Absolute Maximum Ratings[1]**

| Parameter | Symbol | Minimum | Maximum | Units |
|---|---|---|---|---|
| Reverse voltage | $V_R$ | | Rated $V_B$ | V |
| Forward current, steady state | $I_F$ | | 50 | mA |
| Power dissipation | $P_D$ | | 75 | mW |
| Storage temperature | $T_{STG}$ | -65 | +150 | °C |
| Operating temperature | $T_A$ | -65 | +150 | °C |
| Junction temperature | $T_J$ | | +150 | °C |

[1] Exposure to maximum rating conditions for extended periods may reduce device reliability. There is no damage to device with only one parameter set at the limit and all other parameters set at or below their nominal value. Exceeding any of the limits listed here may result in permanent damage to the device.

***ESD HANDLING**: Although this device is designed to be as robust as possible, electrostatic discharge (ESD) can damage this device. This device must be protected at all times from ESD when handling or transporting. Static charges may easily produce potentials of several kilovolts on the human body or equipment, which can discharge without detection. Industry-standard ESD handling precautions should be used at all times.*

**Table 3. Electrical Specifications[1]**
**($T_A$ = +25 °C Per Junction, Unless Otherwise Noted)**

| Part Number | Barrier | Minimum $V_B$ @ 10 µA (V) | Typical $C_T$ @ 0 V (pF) | $V_F$ @ 1 mA (mV) | Maximum Pair Configuration $\Delta V_F$ @ 1 mA (mV) | Maximum $R_T$[2] (Ω) |
|---|---|---|---|---|---|---|
| SMS7621 series | Low | 2 | 0.25 | 260 to 320 | 10 | 18 @ 5 mA |

[1] Performance is guaranteed only under the conditions listed in this table.
[2] $R_T$ is the slope resistance.

**Table 4. Electrical Specifications[1]**
**($T_A$ = +25 °C Per Junction, Unless Otherwise Noted)**

| Part Number | Minimum $V_B$ @ 100 µA (V) | Typical $C_T$ @ 0.15 V (pF) | $V_F$ @ 0.1 mA (mV) | $V_F$ @ 1 mA (mV) | Maximum Pair Configuration $\Delta V_F$ @ 1 mA (mV) | Typical $R_V$ (Ω) |
|---|---|---|---|---|---|---|
| SMS7630 series | 1 | 0.3 | 60 to 120 | 135 to 240 | 10 | 5000 |

[1] Performance is guaranteed only under the conditions listed in this table.

**Table 5. SPICE Model Parameters (Per Junction)**

| Parameter | Units | SMS7621 Series | SMS7630 Series |
|---|---|---|---|
| $I_S$ | A | 4E-8 | 5E-6 |
| $R_S$ | Ω | 12 | 20 |
| N | - | 1.05 | 1.05 |
| TT | sec | 1E-11 | 1E-11 |
| $C_{J0}$ | pF | 0.1 | 0.14 |
| M | - | 0.35 | 0.40 |
| $E_G$ | eV | 0.69 | 0.69 |
| XTI | - | 2 | 2 |
| $F_C$ | - | 0.5 | 0.5 |
| $B_V$ | V | 3 | 2 |
| $I_{BV}$ | A | 1E-5 | 1E-4 |
| $V_J$ | V | 0.51 | 0.34 |

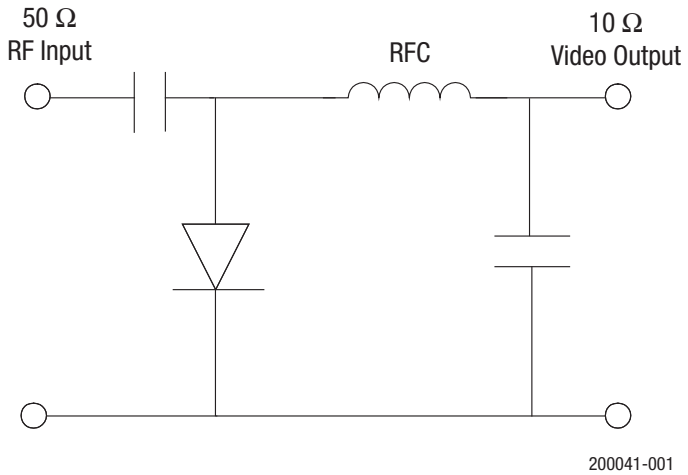


**Figure 1. Typical Detector Circuit**

## Typical Performance Characteristics

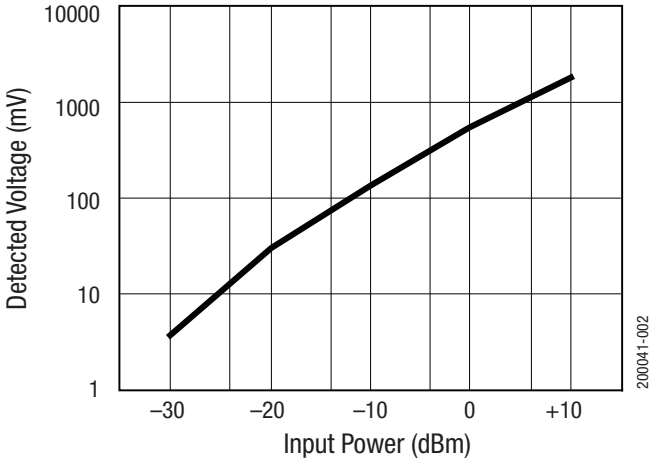


**Figure 2. Typical Detector Characteristics @ 1.8 GHz**

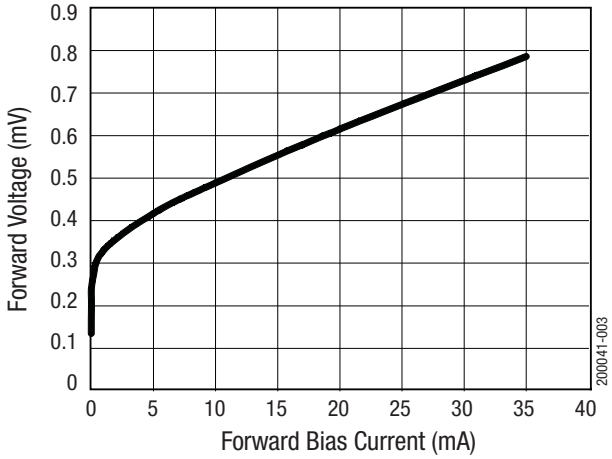


**Figure 3. SMS7621 Forward Voltage vs Forward Bias Current**

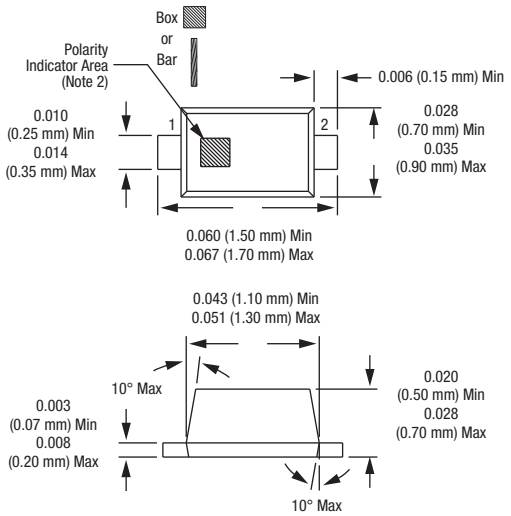


*Notes:*

1. *Dimensions are in inches (millimeters shown in parentheses).*
2. *Cathode indicator for SMS7621-079LF*
   *Anode indicator for SMS7630-079LF*

200041-006

**Figure 4. SC-79 Package Dimension Drawing**

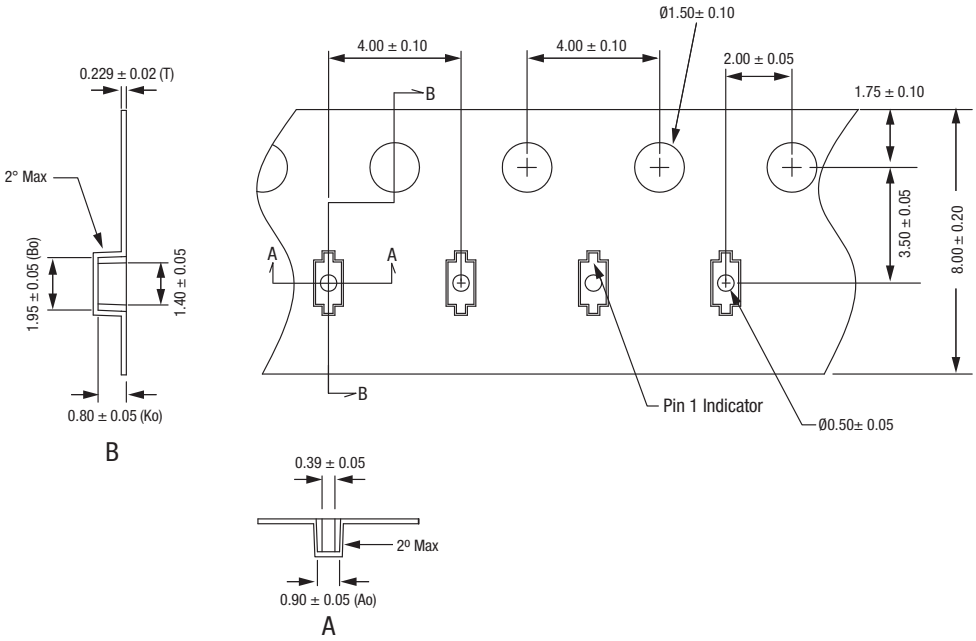


*Notes:*

1. *Carrier tape: black conductive polycarbonate or polystyrene.*
2. *Cover tape material: transparent conductive PSA.*
3. *Cover tape size: 5.4 mm width.*
4. *ESD-surface resistivity is ≤1 x $10^8$ Ohms/square per EIA, JEDEC TNR Specification.*
5. *All measurements are in millimeters.*

200041-007

**Figure 5. SC-79 Tape and Reel Dimensions**

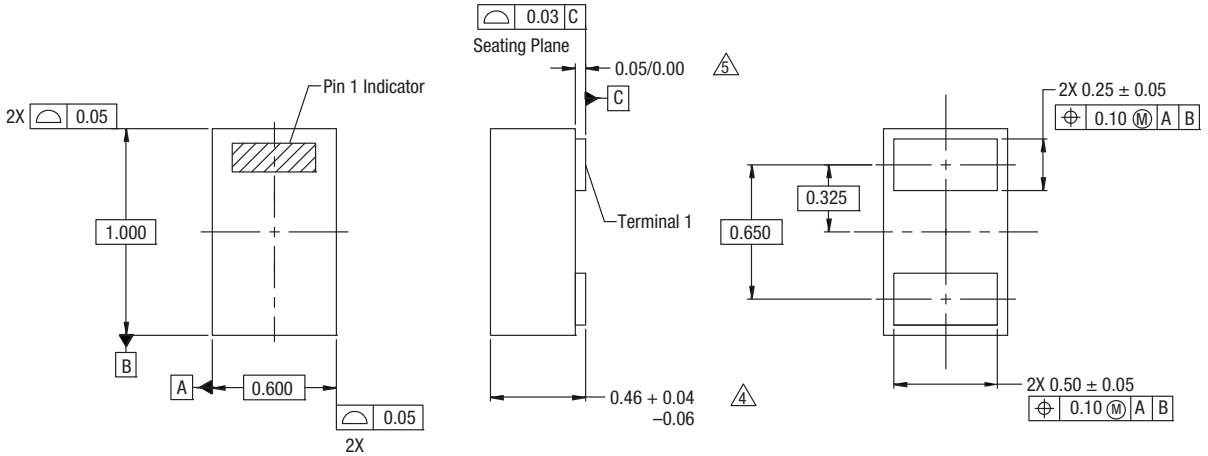


*Notes:*

1. *All measurements are in millimeters.*
2. *Dimensions and tolerances according to ASME Y14.5M-1994.*
3. *These packages are used principally for discrete devices.*
4. *This dimension includes stand-off height and package body thickness, but does not include attached features, e.g., external heatsink or chip capacitors. An integral heatslug is not considered an attached feature.*
5. *This dimension is primarily terminal plating, but does not include small metal protrusion.*

200041-008

**Figure 6. SOD-882 Package Dimension Drawing**

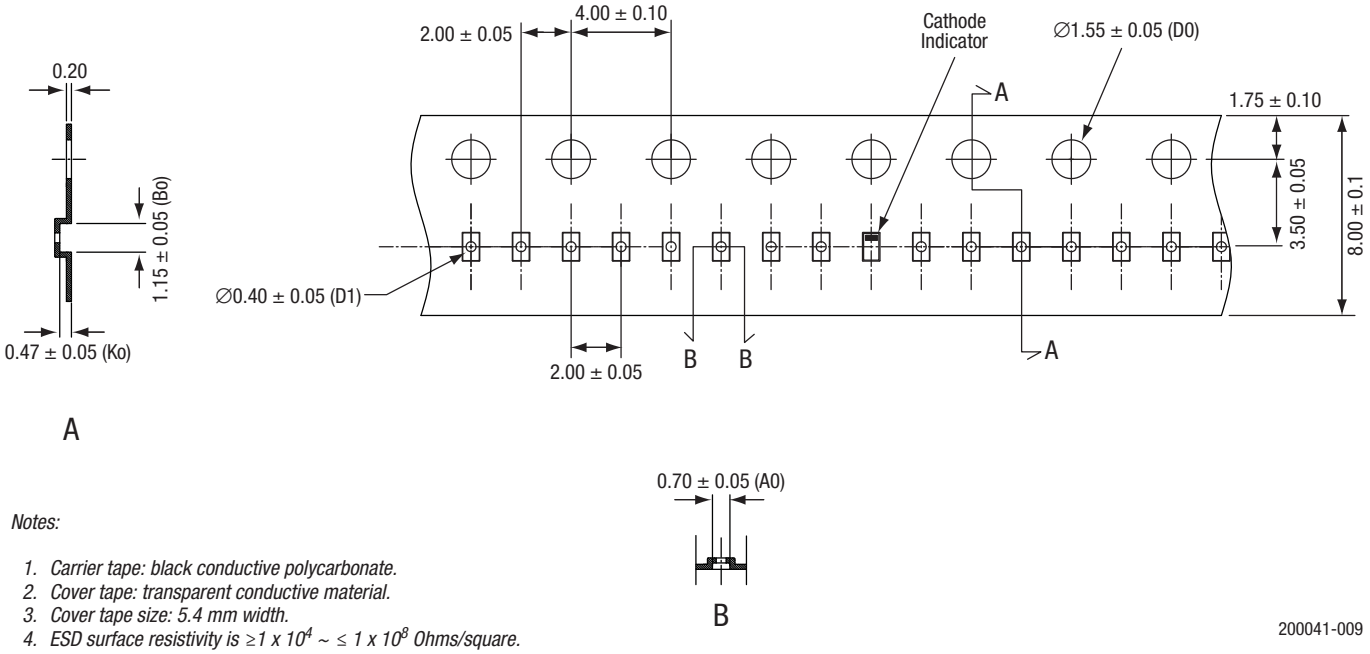


*Notes:*

1. *Carrier tape: black conductive polycarbonate.*
2. *Cover tape: transparent conductive material.*
3. *Cover tape size: 5.4 mm width.*
4. *ESD surface resistivity is ≥1 x $10^4$ ~ ≤ 1 x $10^8$ Ohms/square.*
5. *All dimensions are in millimeters.*

200041-009

**Figure 7. SOD-882 Tape and Reel Dimensions**

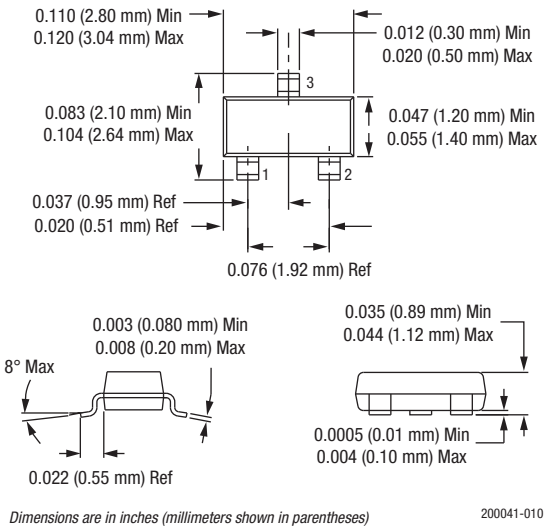


**Figure 8. SOT-23 Package Dimension Drawing**

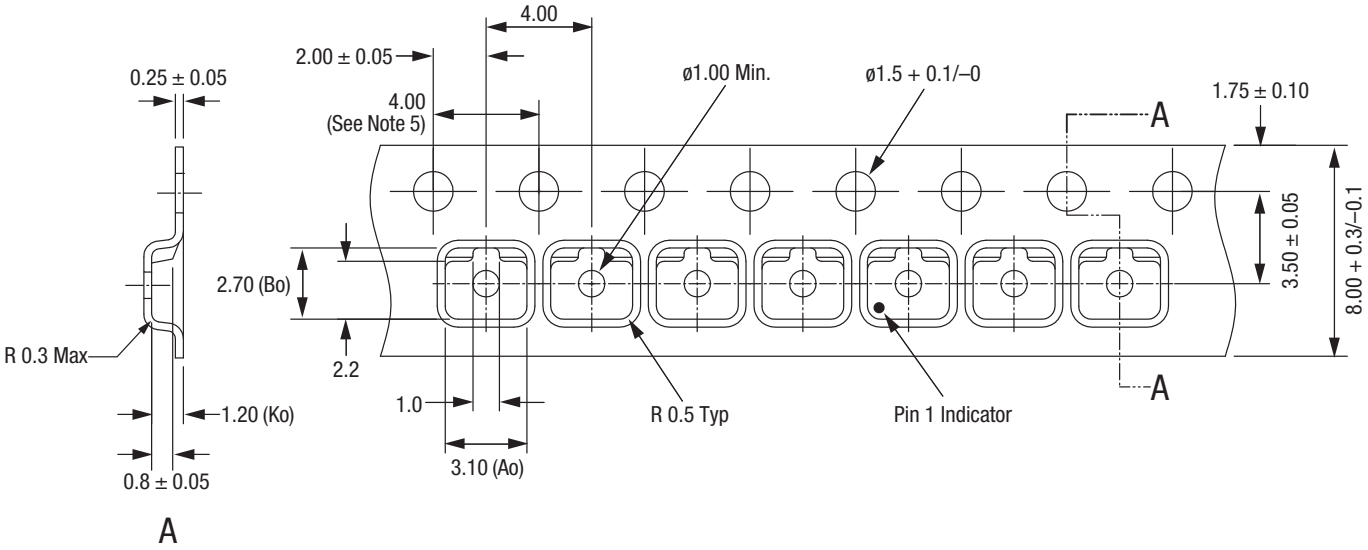


*Notes:*

1. *Carrier tape: black conductive polycarbonate.*
2. *Cover tape material: transparent conductive PSA.*
3. *Cover tape size: 5.40 mm width.*
4. *Tolerance ±0.10 mm.*
5. *Ten sprocket hole pitch cumulative tolerance: ±0.2 mm.*
6. *All measurements are in millimeters.*
7. *Alternative carrier tape dimensions are:*
   *Ao = 3.3*
   *Bo = 2.9*
   *Ko = 1.22*

200041-011

**Figure 9. SOT-23 Tape and Reel Dimensions**

Copyright © 2002-2007, 2009-2016, 2018 Skyworks Solutions, Inc. All Rights Reserved.

Information in this document is provided in connection with Skyworks Solutions, Inc. ("Skyworks") products or services. These materials, including the information contained herein, are provided by Skyworks as a service to its customers and may be used for informational purposes only by the customer. Skyworks assumes no responsibility for errors or omissions in these materials or the information contained herein. Skyworks may change its documentation, products, services, specifications or product descriptions at any time, without notice. Skyworks makes no commitment to update the materials or information and shall have no responsibility whatsoever for conflicts, incompatibilities, or other difficulties arising from any future changes.

No license, whether express, implied, by estoppel or otherwise, is granted to any intellectual property rights by this document. Skyworks assumes no liability for any materials, products or information provided hereunder, including the sale, distribution, reproduction or use of Skyworks products, information or materials, except as may be provided in Skyworks Terms and Conditions of Sale.

THE MATERIALS, PRODUCTS AND INFORMATION ARE PROVIDED "AS IS" WITHOUT WARRANTY OF ANY KIND, WHETHER EXPRESS, IMPLIED, STATUTORY, OR OTHERWISE, INCLUDING FITNESS FOR A PARTICULAR PURPOSE OR USE, MERCHANTABILITY, PERFORMANCE, QUALITY OR NON-INFRINGEMENT OF ANY INTELLECTUAL PROPERTY RIGHT; ALL SUCH WARRANTIES ARE HEREBY EXPRESSLY DISCLAIMED. SKYWORKS DOES NOT WARRANT THE ACCURACY OR COMPLETENESS OF THE INFORMATION, TEXT, GRAPHICS OR OTHER ITEMS CONTAINED WITHIN THESE MATERIALS. SKYWORKS SHALL NOT BE LIABLE FOR ANY DAMAGES, INCLUDING BUT NOT LIMITED TO ANY SPECIAL, INDIRECT, INCIDENTAL, STATUTORY, OR CONSEQUENTIAL DAMAGES, INCLUDING WITHOUT LIMITATION, LOST REVENUES OR LOST PROFITS THAT MAY RESULT FROM THE USE OF THE MATERIALS OR INFORMATION, WHETHER OR NOT THE RECIPIENT OF MATERIALS HAS BEEN ADVISED OF THE POSSIBILITY OF SUCH DAMAGE.

Skyworks products are not intended for use in medical, lifesaving or life-sustaining applications, or other equipment in which the failure of the Skyworks products could lead to personal injury, death, physical or environmental damage. Skyworks customers using or selling Skyworks products for use in such applications do so at their own risk and agree to fully indemnify Skyworks for any damages resulting from such improper use or sale.

Customers are responsible for their products and applications using Skyworks products, which may deviate from published specifications as a result of design defects, errors, or operation of products outside of published parameters or design specifications. Customers should include design and operating safeguards to minimize these and other risks. Skyworks assumes no liability for applications assistance, customer product design, or damage to any equipment resulting from the use of Skyworks products outside of stated published specifications or parameters.

Skyworks and the Skyworks symbol are trademarks or registered trademarks of Skyworks Solutions, Inc. or its subsidiaries in the United States and other countries. Third-party brands and names are for identification purposes only, and are the property of their respective owners. Additional information, including relevant terms and conditions, posted at www.skyworksinc.com, are incorporated by reference.