380-019
EMI/RFI Non-Environmental Backshell
with Strain Relief
Type E - Direct Coupling - Low Profile

CONNECTOR DESIGNATORS

A-B*-C-D-E-F

G-H-J-K-L-S

*** Conn. Desig. B See Note 5**

DIRECT COUPLING

TYPE E INDIVIDUAL AND/OR OVERALL SHIELD TERMINATION

380 F S 019 M 24 12 D A 6

- Product Series
- Connector Designator
- Angle and Profile
  - A = 90°
  - B = 45°
  - S = Straight
- Basic Part No.
- Finish (Table II)
- Length: S only (1/2 inch increments: e.g. 6 = 3 inches)
- Strain Relief Style (H, A, M, D)
- Termination (Note 4)
  - D = 2 Rings
  - T = 3 Rings
- Cable Entry (Tables X, XI)
- Shell Size (Table I)

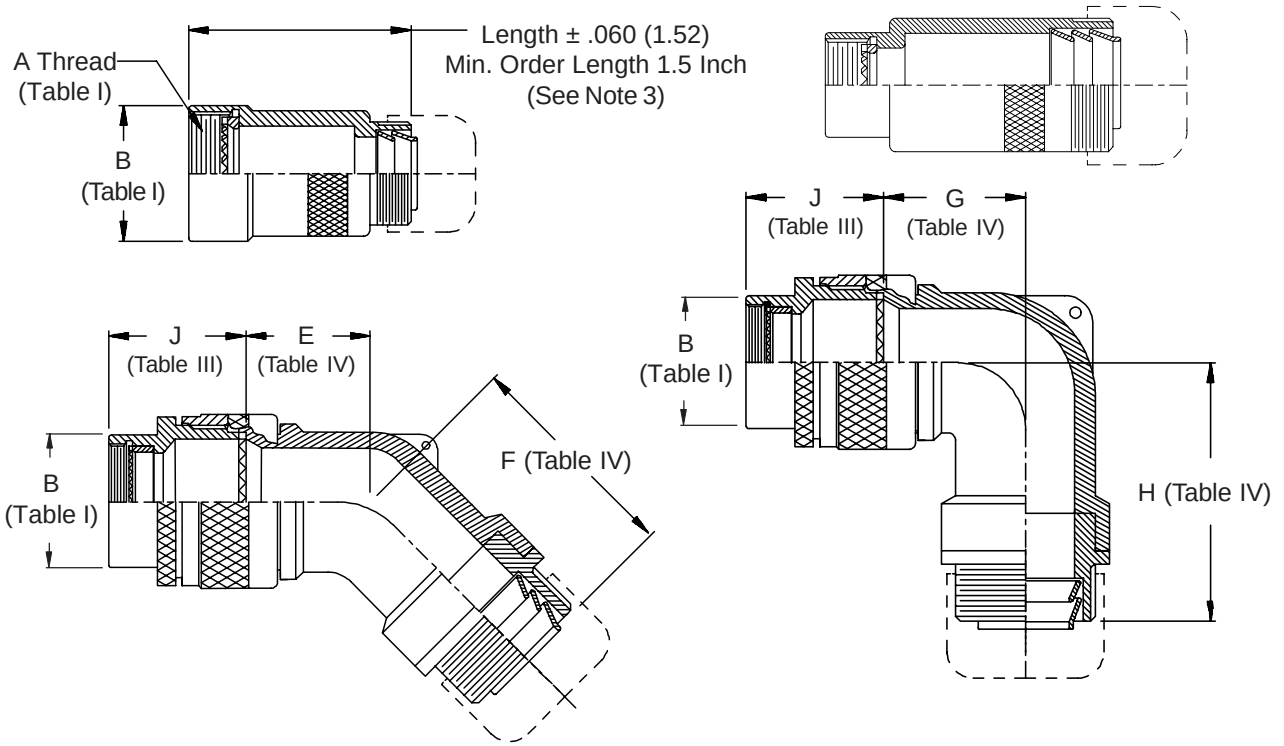

STYLE H
Heavy Duty
(Table X)

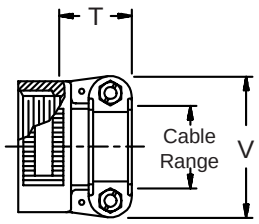

STYLE A
Medium Duty
(Table XI)

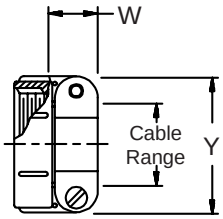

STYLE M
Medium Duty
(Table XI)

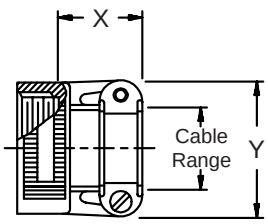

STYLE D
Medium Duty
(Table XI)

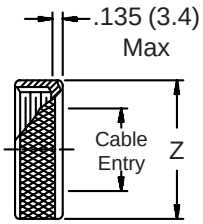

© 2005 Glenair, Inc.

380-019
EMI/RFI Non-Environmental Backshell
with Strain Relief
Type E - Direct Coupling - Low Profile

See inside back cover fold-out or pages 13 and 14 for unabridged Tables I and II.

TABLE III: FRONT ADAPTER

Shell Size	J Max - Conn. Designator A-E-F J-H-L-S	D-B-G-K	C
08/09	1.180 (30.0)	1.440 (36.6)	
10/11	1.180 (30.0)	1.440 (36.6)	
12/13	1.180 (30.0)	1.440 (36.6)	1.735 (44.1)
14/15	1.180 (30.0)	1.440 (36.6)	1.915 (48.6)
16/17	1.380 (35.0)	1.560 (39.6)	1.915 (48.6)
18/19	1.380 (35.0)	1.560 (39.6)	1.915 (48.6)
20/21	1.380 (35.0)	1.560 (39.6)	1.915 (48.6)
22/23	1.380 (35.0)	1.560 (39.6)	1.915 (48.6)
24/25	1.380 (35.0)	1.560 (39.6)	1.915 (48.6)
28/29	1.610 (40.9)	1.560 (39.6)	1.915 (48.6)
32/33	1.610 (40.9)	1.750 (44.5)	1.915 (48.6)
36	1.610 (40.9)	1.750 (44.5)	1.915 (48.6)
40	1.610 (40.9)	2.190 (55.6)	1.915 (48.6)

TABLE IV: ELBOW DIMENSIONS

Elbow Size	E Max	F Max	G Max	H Max
03	.457 (11.6)	1.470 (37.3)	.500 (12.7)	1.480 (37.6)
04	.457 (11.6)	1.470 (37.3)	.500 (12.7)	1.480 (37.6)
06	.520 (13.2)	1.530 (38.9)	.595 (15.1)	1.600 (40.6)
08	.582 (14.8)	1.590 (40.4)	.610 (15.5)	1.620 (41.1)
10	.645 (16.4)	1.680 (42.7)	.700 (17.8)	1.690 (42.9)
12	.738 (18.7)	1.790 (45.5)	.885 (22.5)	1.950 (49.5)
16	.926 (23.5)	1.980 (50.3)	.975 (24.8)	2.060 (52.3)
20	1.020 (25.9)	2.130 (54.1)	1.125 (28.6)	2.060 (52.3)

1. Metric dimensions (mm) are indicated in parentheses.
2. Cable range is defined as the accommodations range for the wire bundle or cable. Dimensions shown are not for inspection criteria.
3. Consult factory for shorter lengths on straight backshells.
4. Designate Symbol T for 3 ring termination of individual and overall braid. Designate D for standard 2 ring termination of individual or overall braid.
5. When using Connector Designator B refer to pages 18 and 19 for part number development.

TABLE X: CABLE ENTRY

Dash No.	T Max	V Max	Cable Range Min	Cable Range Max
04	.780 (19.8)	.957 (24.3)	.125 (3.2)	.312 (7.9)
06	.780 (19.8)	1.145 (29.1)	.250 (6.4)	.437 (11.1)
08	.780 (19.8)	1.332 (33.8)	.312 (7.9)	.562 (14.3)
10	.780 (19.8)	1.332 (33.8)	.350 (8.9)	.625 (15.9)
12	.811 (20.6)	1.551 (39.4)	.500 (12.7)	.750 (19.1)
16	.905 (23.0)	1.770 (45.0)	.625 (15.9)	.937 (23.8)
20	1.092 (27.7)	2.113 (53.7)	.875 (22.2)	1.250 (31.8)
24	1.124 (28.5)	2.363 (60.0)	1.000 (25.4)	1.375 (34.9)
28	1.399 (35.5)	2.770 (70.4)	1.250 (31.8)	1.625 (41.3)
32	1.399 (35.5)	3.020 (76.7)	1.437 (36.5)	1.875 (47.6)

TABLE II: STANDARD FINISHES

GLENAIR SYMBOL	FINISH
B	Cadmium Plate, Olive Drab
M	Electroless Nickel
NF	Cadmium Plate, Olive Drab Over Electroless Nickel

See Inside Back Cover for Additional Finish Options

TABLE XI: CABLE ENTRY

Dash No.	W Max	X Max	Y Max	Z Max	Cable Range Min **	Cable Range Max
03*	.437 (11.1)	.760 (19.3)	.843 (21.4)	.630 (16.0)	.156 (4.0)	.250 (6.4)
04*	.437 (11.1)	.760 (19.3)	.906 (23.0)	.755 (19.2)	.188 (4.8)	.312 (7.9)
06*	.500 (12.7)	.760 (19.3)	1.093 (27.8)	.942 (23.9)	.281 (7.1)	.438 (11.1)
08	.563 (14.3)	.760 (19.3)	1.187 (30.1)	1.067 (27.1)	.344 (8.7)	.562 (14.3)
10	.563 (14.3)	.760 (19.3)	1.281 (32.5)	1.192 (30.3)	.375 (9.5)	.625 (15.9)
12	.563 (14.3)	.760 (19.3)	1.500 (38.1)	1.380 (35.1)	.438 (11.1)	.750 (19.1)
16	.656 (16.7)	1.073 (27.3)	1.719 (43.7)	1.535 (39.0)	.562 (14.3)	.938 (23.8)
20	.656 (16.7)	1.323 (33.6)	2.062 (52.4)	1.848 (46.9)	.750 (19.1)	1.250 (31.8)
24	.656 (16.7)	1.323 (33.6)	2.312 (58.7)	2.255 (57.3)	.781 (19.8)	1.375 (34.9)
28	1.188 (30.2)	1.572 (39.9)	2.719 (69.1)	2.505 (63.6)	.969 (24.6)	1.625 (41.3)
32*	1.187 (30.1)	1.572 (39.9)	2.969 (75.4)	2.755 (70.0)	1.125 (28.6)	1.875 (47.6)
40*	1.125 (28.6)	1.572 (39.9)	3.531 (89.7)	3.255 (82.7)	1.469 (37.3)	2.375 (60.3)

* Not available in Style M clamp. ** Not Applicable Style D

© 2005 Glenair, Inc. CAGE Code 06324 Printed in U.S.A.