# Two-4-One™ Power Transformers
## Chassis Mount with Lead Wires

BUY DIRECT 24 HOUR PRONTO℠ SHIPMENT TEL: (516) 239-5777 FAX: (516) 239-7208

## Split Bobbin with High Isolation

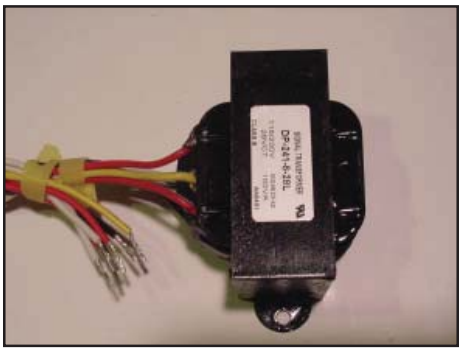

Signal's 241-L transformers use a split bobbin that provides superior isolation and low capacitive coupling.

**General Specifications**
- Power - 2.4 VA to 100 VA
- Dielectric Strength - 2500 Vrms Hipot
- Primaries - Single or dual primaries (115V or 115/230 V - 50/60 Hz)
- Secondary - Single center tapped secondary
- Insulation - Class B (130º C) UL 1446 E66312

**Compliant With**
- UL 506 / UL 5085, CSA 22.2, #66.1

**Lead Wires**
- Hook up lead wire style UL1015, CSA TEW
- Rated 600V -40° to +105° C
- Passes UL VW-1 (flame test)
- All primary and secondary lead wires are 18AWG UL 1015
- All lead wires are 12" in length

RoHS 2002/95/EC

| Part Number | | Secondary RMS Rating | Part Number | | Secondary RMS Rating |
|---|---|---|---|---|---|
| Single 115V | Dual 115/230V | | Single 115V | Dual 115/230V | |
| 241-3-10L | Not Available | 10.0 VCT @ 0.25A | 241-3-28L | Not Available | 28 VCT @ 0.085A |
| 241-4-10L | DP-241-4-10L | 10.0 VCT @ 0.60A | 241-4-28L | DP-241-4-28L | 28 VCT @ 0.20A |
| 241-5-10L | DP-241-5-10L | 10.0 VCT @ 1.2A | 241-5-28L | DP-241-5-28L | 28 VCT @ 0.42A |
| 241-6-10L | DP-241-6-10L | 10.0 VCT @ 3.0A | 241-6-28L | DP-241-6-28L | 28 VCT @ 1.1A |
| 241-7-10L | DP-241-7-10L | 10.0 VCT @ 5.0A | 241-7-28L | DP-241-7-28L | 28 VCT @ 2.0A |
| 241-8-10L | DP-241-8-10L | 10.0 VCT @ 10A | 241-8-28L | DP-241-8-28L | 28 VCT @ 3.6A |
| 241-3-12L | Not Available | 12.6 VCT @ 0.20A | 241-3-36L | Not Available | 36 VCT @ 0.065A |
| 241-4-12L | DP-241-4-12L | 12.6 VCT @ 0.50A | 241-4-36L | DP-241-4-36L | 36 VCT @ 0.17A |
| 241-5-12L | DP-241-5-12L | 12.6 VCT @ 1.0A | 241-5-36L | DP-241-5-36L | 36 VCT @ 0.35A |
| 241-6-12L | DP-241-6-12L | 12.6 VCT @ 2.5A | 241-6-36L | DP-241-6-36L | 36 VCT @ 0.85A |
| 241-7-12L | DP-241-7-12L | 12.6 VCT @ 4.0A | 241-7-36L | DP-241-7-36L | 36 VCT @ 1.5A |
| 241-8-12L | DP-241-8-12L | 12.6 VCT @ 8.0A | 241-8-36L | DP-241-8-36L | 36 VCT @ 2.8A |
| 241-3-16L | Not Available | 16.0 VCT @ 0.15A | 241-3-48L | Not Available | 48 VCT @ 0.05A |
| 241-4-16L | DP-241-4-16L | 16.0 VCT @ 0.40A | 241-4-48L | DP-241-4-48L | 48 VCT @ 0.125A |
| 241-5-16L | DP-241-5-16L | 16.0 VCT @ 0.80A | 241-5-48L | DP-241-5-48L | 48 VCT @ 0.25A |
| 241-6-16L | DP-241-6-16L | 16.0 VCT @ 2.0A | 241-6-48L | DP-241-6-48L | 48 VCT @ 0.63A |
| 241-7-16L | DP-241-7-16L | 16.0 VCT @ 3.5A | 241-7-48L | DP-241-7-48L | 48 VCT @ 1.2A |
| 241-8-16L | DP-241-8-16L | 16.0 VCT @ 6.25A | 241-8-48L | DP-241-8-48L | 48 VCT @ 2.0A |
| 241-3-20L | Not Available | 20.0 VCT @ 0.12A | 241-3-56 | Not Available | 56 VCT @ 0.045A |
| 241-4-20L | DP-241-4-20L | 20.0 VCT @ 0.30A | 241-4-56L | DP-241-4-56L | 56 VCT @ 0.11A |
| 241-5-20L | DP-241-5-20L | 20.0 VCT @ 0.60A | 241-5-56L | DP-241-5-56L | 56 VCT @ 0.22A |
| 241-6-20L | DP-241-6-20L | 20.0 VCT @ 1.5A | 241-6-56L | DP-241-6-56L | 56 VCT @ 0.54A |
| 241-7-20L | DP-241-7-20L | 20.0 VCT @ 2.8A | 241-7-56L | DP-241-7-56L | 56 VCT @ 1.00A |
| 241-8-20L | DP-241-8-20L | 20.0 VCT @ 5.0A | 241-8-56L | DP-241-8-56L | 56 VCT @ 1.8A |
| 241-3-24L | Not Available | 24.0 VCT @ 0.10A | 241-3-120L | Not Available | 120VCT @ 0.02A |
| 241-4-24L | DP-241-4-24L | 24.0 VCT @ 0.25A | 241-4-120L | DP-241-4-120L | 120VCT @ 0.05A |
| 241-5-24L | DP-241-5-24L | 24.0 VCT @ 0.50A | 241-5-120L | DP-241-5-120L | 120VCT @ 0.10A |
| 241-6-24L | DP-241-6-24L | 24.0 VCT @ 1.25A | 241-6-120L | DP-241-6-120L | 120VCT @ 0.25A |
| 241-7-24L | DP-241-7-24L | 24.0 VCT @ 2.4A | 241-7-120L | DP-241-7-120L | 120VCT @ 0.50A |
| 241-8-24L | DP-241-8-24L | 24.0 VCT @ 4.0A | 241-8-120L | DP-241-8-120L | 120VCT @ 0.85A |

**Custom versions available upon request.**

©2015 Signal Transformer Inc. Specifications subject to change without notice. 07.15

signal TRANSFORMER a bel group
www.signaltransformer.com

500 Bayview Avenue, Inwood, NY 11096
Toll Free 866-239-5777 • Tel 516-239-5777 • Fax 516-239-7208
sales@signaltransformer.com • techhelp@signaltransformer.com

# Two-4-One™ Power Transformers
## Chassis Mount with Lead Wires

Split Bobbin with High Isolation

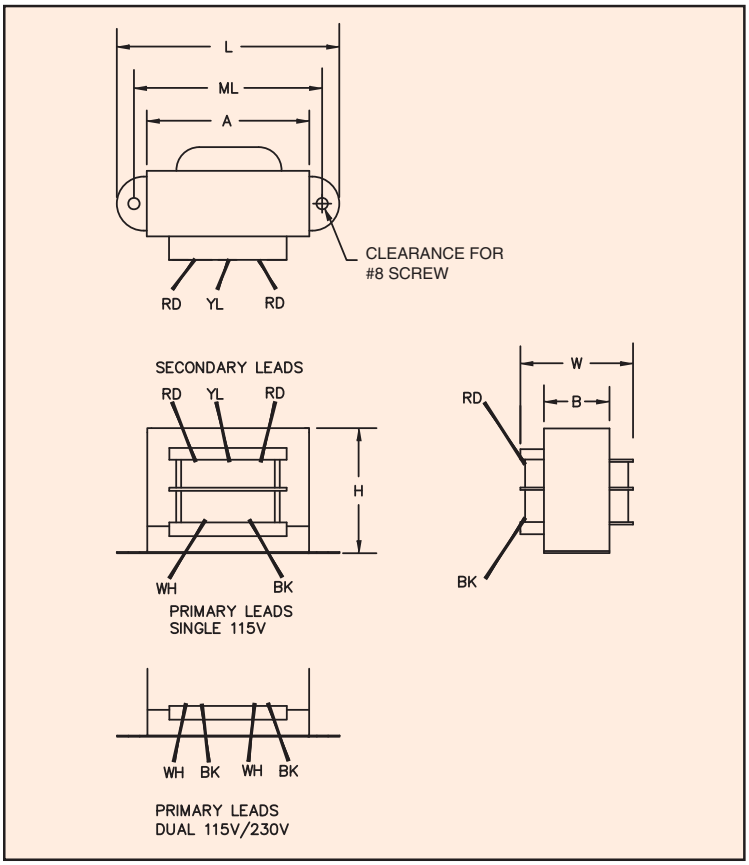


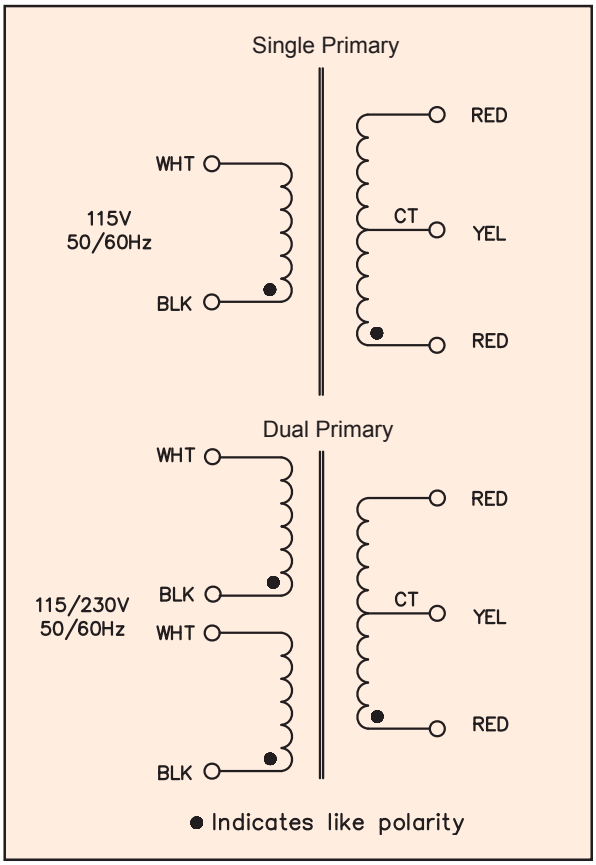


| Size | VA | Dimensions | | | | | | Weight |
|---|---|---|---|---|---|---|---|---|
| | | L | W | H | A | B | ML typ | |
| | | Inches (mm) | | | | | | lbs (kg) |
| 3 | 2.4 | 2.07 (52.6) | 1.17 (29.6) | 1.23 (31.2) | 1.62 (41.3) | 0.59 (15.0) | 1.75 (44.5) | 0.25 (0.11) |
| 4 | 6 | 2.37 (60.3) | 1.31 (33.3) | 1.43 (36.2) | 1.71 (43.4) | 0.72 (18.3) | 2.00 (50.8) | 0.44 (0.20) |
| 5 | 12 | 2.81 (71.4) | 1.43 (36.3) | 1.69 (42.8) | 1.97 (49.9) | 0.89 (22.6) | 2.37 (60.3) | 0.7 (0.32) |
| 6 | 30 | 3.25 (82.6) | 1.74 (44.3) | 1.96 (49.8) | 2.35 (59.7) | 1.14 (28.9) | 2.81 (71.4) | 1.1 (0.50) |
| 7 | 56 | 3.68 (93.5) | 1.94 (49.2) | 2.28 (57.8) | 2.70 (68.4) | 1.14 (28.9) | 3.12 (79.4) | 1.7 (0.77) |
| 8 | 100 | 4.03 (102.4) | 2.30 (58.5) | 2.58 (65.5) | 3.08 (78.2) | 1.43 (36.2) | 3.56 (90.4) | 2.75 (1.25) |

**Custom versions available upon request.**

©2015 Signal Transformer Inc. Specifications subject to change without notice. 07.15

signal TRANSFORMER a bel group
www.signaltransformer.com

500 Bayview Avenue, Inwood, NY 11096
Toll Free 866-239-5777 • Tel 516-239-5777 • Fax 516-239-7208
sales@signaltransformer.com • techhelp@signaltransformer.com