Two-4-One™ Power Transformers
Chassis Mount with Lead Wires

BUY DIRECT 24 HOUR PRONTO℠ SHIPMENT TEL: (516) 239-5777 FAX: (516) 239-7208

Split Bobbin with High Isolation

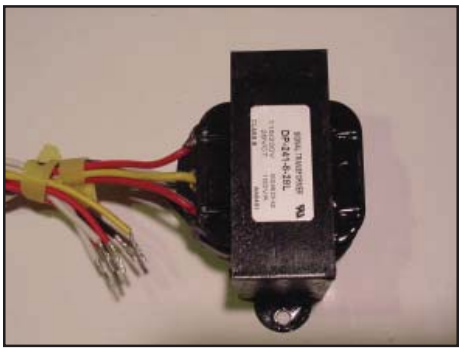

Signal's 241-L transformers use a split bobbin that provides superior isolation and low capacitive coupling.

General Specifications
- Power - 2.4 VA to 100 VA
- Dielectric Strength - 2500 Vrms Hipot
- Primaries - Single or dual primaries (115V or 115/230 V - 50/60 Hz)
- Secondary - Single center tapped secondary
- Insulation - Class B (130º C) UL 1446 E66312

Compliant With
- UL 506 / UL 5085, CSA 22.2, #66.1

Lead Wires
- Hook up lead wire style UL1015, CSA TEW
- Rated 600V -40° to +105° C
- Passes UL VW-1 (flame test)
- All primary and secondary lead wires are 18AWG UL 1015
- All lead wires are 12" in length

RoHS 2002/95/EC

Part Number		Secondary RMS Rating	Part Number		Secondary RMS Rating
Single 115V	Dual 115/230V		Single 115V	Dual 115/230V	
241-3-10L	Not Available	10.0 VCT @ 0.25A	241-3-28L	Not Available	28 VCT @ 0.085A
241-4-10L	DP-241-4-10L	10.0 VCT @ 0.60A	241-4-28L	DP-241-4-28L	28 VCT @ 0.20A
241-5-10L	DP-241-5-10L	10.0 VCT @ 1.2A	241-5-28L	DP-241-5-28L	28 VCT @ 0.42A
241-6-10L	DP-241-6-10L	10.0 VCT @ 3.0A	241-6-28L	DP-241-6-28L	28 VCT @ 1.1A
241-7-10L	DP-241-7-10L	10.0 VCT @ 5.0A	241-7-28L	DP-241-7-28L	28 VCT @ 2.0A
241-8-10L	DP-241-8-10L	10.0 VCT @ 10A	241-8-28L	DP-241-8-28L	28 VCT @ 3.6A
241-3-12L	Not Available	12.6 VCT @ 0.20A	241-3-36L	Not Available	36 VCT @ 0.065A
241-4-12L	DP-241-4-12L	12.6 VCT @ 0.50A	241-4-36L	DP-241-4-36L	36 VCT @ 0.17A
241-5-12L	DP-241-5-12L	12.6 VCT @ 1.0A	241-5-36L	DP-241-5-36L	36 VCT @ 0.35A
241-6-12L	DP-241-6-12L	12.6 VCT @ 2.5A	241-6-36L	DP-241-6-36L	36 VCT @ 0.85A
241-7-12L	DP-241-7-12L	12.6 VCT @ 4.0A	241-7-36L	DP-241-7-36L	36 VCT @ 1.5A
241-8-12L	DP-241-8-12L	12.6 VCT @ 8.0A	241-8-36L	DP-241-8-36L	36 VCT @ 2.8A
241-3-16L	Not Available	16.0 VCT @ 0.15A	241-3-48L	Not Available	48 VCT @ 0.05A
241-4-16L	DP-241-4-16L	16.0 VCT @ 0.40A	241-4-48L	DP-241-4-48L	48 VCT @ 0.125A
241-5-16L	DP-241-5-16L	16.0 VCT @ 0.80A	241-5-48L	DP-241-5-48L	48 VCT @ 0.25A
241-6-16L	DP-241-6-16L	16.0 VCT @ 2.0A	241-6-48L	DP-241-6-48L	48 VCT @ 0.63A
241-7-16L	DP-241-7-16L	16.0 VCT @ 3.5A	241-7-48L	DP-241-7-48L	48 VCT @ 1.2A
241-8-16L	DP-241-8-16L	16.0 VCT @ 6.25A	241-8-48L	DP-241-8-48L	48 VCT @ 2.0A
241-3-20L	Not Available	20.0 VCT @ 0.12A	241-3-56	Not Available	56 VCT @ 0.045A
241-4-20L	DP-241-4-20L	20.0 VCT @ 0.30A	241-4-56L	DP-241-4-56L	56 VCT @ 0.11A
241-5-20L	DP-241-5-20L	20.0 VCT @ 0.60A	241-5-56L	DP-241-5-56L	56 VCT @ 0.22A
241-6-20L	DP-241-6-20L	20.0 VCT @ 1.5A	241-6-56L	DP-241-6-56L	56 VCT @ 0.54A
241-7-20L	DP-241-7-20L	20.0 VCT @ 2.8A	241-7-56L	DP-241-7-56L	56 VCT @ 1.00A
241-8-20L	DP-241-8-20L	20.0 VCT @ 5.0A	241-8-56L	DP-241-8-56L	56 VCT @ 1.8A
241-3-24L	Not Available	24.0 VCT @ 0.10A	241-3-120L	Not Available	120VCT @ 0.02A
241-4-24L	DP-241-4-24L	24.0 VCT @ 0.25A	241-4-120L	DP-241-4-120L	120VCT @ 0.05A
241-5-24L	DP-241-5-24L	24.0 VCT @ 0.50A	241-5-120L	DP-241-5-120L	120VCT @ 0.10A
241-6-24L	DP-241-6-24L	24.0 VCT @ 1.25A	241-6-120L	DP-241-6-120L	120VCT @ 0.25A
241-7-24L	DP-241-7-24L	24.0 VCT @ 2.4A	241-7-120L	DP-241-7-120L	120VCT @ 0.50A
241-8-24L	DP-241-8-24L	24.0 VCT @ 4.0A	241-8-120L	DP-241-8-120L	120VCT @ 0.85A

Custom versions available upon request.

©2015 Signal Transformer Inc. Specifications subject to change without notice. 07.15

signal TRANSFORMER a bel group
www.signaltransformer.com

500 Bayview Avenue, Inwood, NY 11096
Toll Free 866-239-5777 • Tel 516-239-5777 • Fax 516-239-7208
sales@signaltransformer.com • techhelp@signaltransformer.com

Two-4-One™ Power Transformers
Chassis Mount with Lead Wires

Split Bobbin with High Isolation

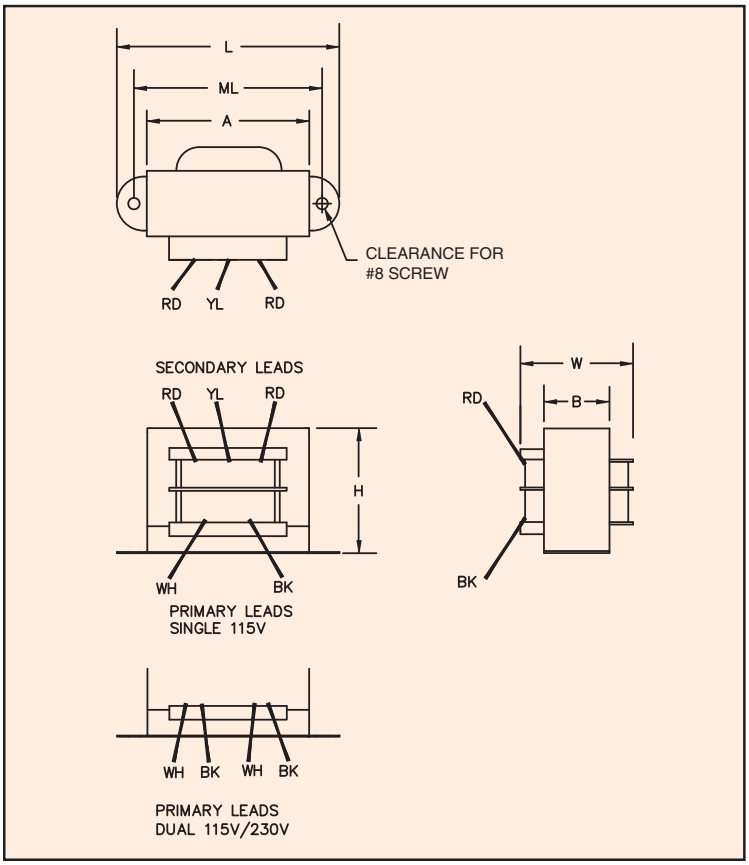

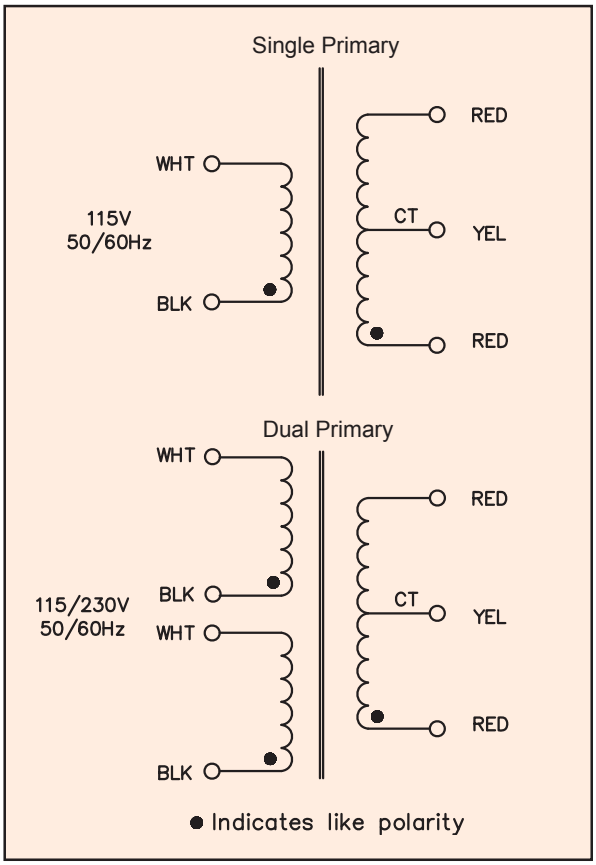

Size	VA	Dimensions						Weight
		L	W	H	A	B	ML typ	
		Inches (mm)						lbs (kg)
3	2.4	2.07 (52.6)	1.17 (29.6)	1.23 (31.2)	1.62 (41.3)	0.59 (15.0)	1.75 (44.5)	0.25 (0.11)
4	6	2.37 (60.3)	1.31 (33.3)	1.43 (36.2)	1.71 (43.4)	0.72 (18.3)	2.00 (50.8)	0.44 (0.20)
5	12	2.81 (71.4)	1.43 (36.3)	1.69 (42.8)	1.97 (49.9)	0.89 (22.6)	2.37 (60.3)	0.7 (0.32)
6	30	3.25 (82.6)	1.74 (44.3)	1.96 (49.8)	2.35 (59.7)	1.14 (28.9)	2.81 (71.4)	1.1 (0.50)
7	56	3.68 (93.5)	1.94 (49.2)	2.28 (57.8)	2.70 (68.4)	1.14 (28.9)	3.12 (79.4)	1.7 (0.77)
8	100	4.03 (102.4)	2.30 (58.5)	2.58 (65.5)	3.08 (78.2)	1.43 (36.2)	3.56 (90.4)	2.75 (1.25)

Custom versions available upon request.

©2015 Signal Transformer Inc. Specifications subject to change without notice. 07.15

signal TRANSFORMER a bel group
www.signaltransformer.com

500 Bayview Avenue, Inwood, NY 11096
Toll Free 866-239-5777 • Tel 516-239-5777 • Fax 516-239-7208
sales@signaltransformer.com • techhelp@signaltransformer.com