Features

- Advanced Process Technology
- Ultra Low On-Resistance
- 175°C Operating Temperature
- Fast Switching
- Repetitive Avalanche Allowed up to Tjmax
- Lead-Free, RoHS Compliant
- Automotive Qualified *

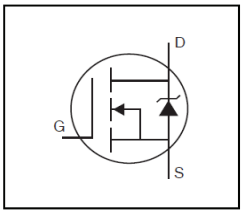

V_{DSS}		30V
$R_{DS(on)}$	typ.	1.9mΩ
	max.	2.4mΩ
I_D (Silicon Limited)		235A⑨
I_D (Package Limited)		160A

Description

Specifically designed for Automotive applications, this HEXFET® Power MOSFET utilizes the latest processing techniques to achieve extremely low on-resistance per silicon area. Additional features of this design are a 175°C junction operating temperature, fast switching speed and improved repetitive avalanche rating. These features combine to make this design an extremely efficient and reliable device for use in Automotive applications and wide variety of other applications.

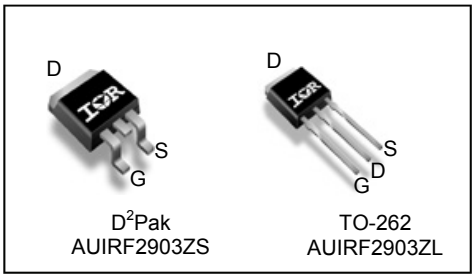

G	D	S
Gate	Drain	Source

Base part number	Package Type	Standard Pack		Orderable Part Number
		Form	Quantity	
AUIRF2903ZL	TO-262	Tube	50	AUIRF2903ZL
AUIRF2903ZS	D^2-Pak	Tube	50	AUIRF2903ZS
		Tape and Reel Left	800	AUIRF2903ZSTRL

Absolute Maximum Ratings

Stresses beyond those listed under "Absolute Maximum Ratings" may cause permanent damage to the device. These are stress ratings only; and functional operation of the device at these or any other condition beyond those indicated in the specifications is not implied. Exposure to absolute-maximum-rated conditions for extended periods may affect device reliability. The thermal resistance and power dissipation ratings are measured under board mounted and still air conditions. Ambient temperature (TA) is 25°C, unless otherwise specified.

Symbol	Parameter	Max.	Units
I_D @ T_C = 25°C	Continuous Drain Current, V_{GS} @ 10V (Silicon Limited)	235⑨	A
I_D @ T_C = 100°C	Continuous Drain Current, V_{GS} @ 10V (Silicon Limited)	166⑨	
I_D @ T_C = 25°C	Continuous Drain Current, V_{GS} @ 10V (Package Limited)	160	
I_{DM}	Pulsed Drain Current ①	1020	
P_D @T_C = 25°C	Maximum Power Dissipation	231	W
	Linear Derating Factor	1.54	W/°C
V_{GS}	Gate-to-Source Voltage	± 20	V
E_{AS}	Single Pulse Avalanche Energy (Thermally Limited) ②	231	mJ
E_{AS} (tested)	Single Pulse Avalanche Energy Tested Value ⑥	820	
I_{AR}	Avalanche Current ①	See Fig.15,16, 12a, 12b	A
E_{AR}	Repetitive Avalanche Energy ⑤		mJ
T_J T_{STG}	Operating Junction and Storage Temperature Range	-55 to + 175	°C
	Soldering Temperature, for 10 seconds (1.6mm from case)	300	

Thermal Resistance

Symbol	Parameter	Typ.	Max.	Units
$R_{\theta JC}$	Junction-to-Case ⑧	——	0.65	°C/W
$R_{\theta JA}$	Junction-to-Ambient	——	62	
$R_{\theta JA}$	Junction-to-Ambient (PCB Mount, steady state) ⑦		40	

HEXFET® is a registered trademark of Infineon.
*Qualification standards can be found at www.infineon.com

Static @ T_J = 25°C (unless otherwise specified)

	Parameter	Min.	Typ.	Max.	Units	Conditions
$V_{(BR)DSS}$	Drain-to-Source Breakdown Voltage	30	—	—	V	V_{GS} = 0V, I_D = 250μA
$\Delta V_{(BR)DSS}/\Delta T_J$	Breakdown Voltage Temp. Coefficient	—	0.021	—	V/°C	Reference to 25°C, I_D = 1mA
$R_{DS(on)}$	Static Drain-to-Source On-Resistance	—	1.9	2.4	mΩ	V_{GS} = 10V, I_D = 75A ③⑩
$V_{GS(th)}$	Gate Threshold Voltage	2.0	—	4.0	V	V_{DS} = V_{GS}, I_D = 150μA
gfs	Forward Trans conductance	120	—	—	S	V_{DS} = 10V, I_D = 75A⑩
I_{DSS}	Drain-to-Source Leakage Current	—	—	20	μA	V_{DS} =30 V, V_{GS} = 0V
		—	—	250		V_{DS} =30V,V_{GS} = 0V,T_J =125°C
I_{GSS}	Gate-to-Source Forward Leakage	—	—	200	nA	V_{GS} = 20V
	Gate-to-Source Reverse Leakage	—	—	-200		V_{GS} = -20V

Dynamic Electrical Characteristics @ T_J = 25°C (unless otherwise specified)

Q_g	Total Gate Charge	—	160	240	nC	I_D = 75A⑩
Q_{gs}	Gate-to-Source Charge	—	51	—		V_{DS} = 24V
Q_{gd}	Gate-to-Drain Charge	—	58	—		V_{GS} = 10V③
$t_{d(on)}$	Turn-On Delay Time	—	24	—	ns	V_{DD} = 15V
t_r	Rise Time	—	100	—		I_D = 75A⑩
$t_{d(off)}$	Turn-Off Delay Time	—	48	—		R_G= 3.2Ω
t_f	Fall Time	—	37	—		V_{GS} = 10V ③
L_D	Internal Drain Inductance	—	4.5	—	nH	Between lead, 6mm (0.25in.) from package and center of die contact
L_S	Internal Source Inductance	—	7.5	—		
C_{iss}	Input Capacitance	—	6320	—	pF	V_{GS} = 0V
C_{oss}	Output Capacitance	—	1980	—		V_{DS} = 25V
C_{rss}	Reverse Transfer Capacitance	—	1100	—		f = 1.0MHz, See Fig. 5
C_{oss}	Output Capacitance	—	5930	—		V_{GS} = 0V, V_{DS} = 1.0V f = 1.0MHz
C_{oss}	Output Capacitance	—	2010	—		V_{GS} = 0V, V_{DS} = 24V f = 1.0MHz
$C_{oss\ eff.}$	Effective Output Capacitance	—	3050	—		V_{GS} = 0V, V_{DS} = 0V to 24V ④

Diode Characteristics

	Parameter	Min.	Typ.	Max.	Units	Conditions
I_S	Continuous Source Current (Body Diode)	—	—	160⑨	A	MOSFET symbol showing the integral reverse p-n junction diode.
I_{SM}	Pulsed Source Current (Body Diode) ①	—	—	1020		
V_{SD}	Diode Forward Voltage	—	—	1.3	V	T_J = 25°C,I_S = 75A⑩,V_{GS} = 0V ③
t_{rr}	Reverse Recovery Time	—	34	51	ns	T_J = 25°C ,I_F = 75A⑩, V_{DD} = 15V
Q_{rr}	Reverse Recovery Charge	—	29	44	nC	di/dt = 100A/μs ③
t_{on}	Forward Turn-On Time	Intrinsic turn-on time is negligible (turn-on is dominated by L_S+L_D)				

Notes:

① Repetitive rating; pulse width limited by max. junction temperature. (See fig. 11)
② Limited by $T_{Jmax,}$ starting T_J = 25°C, L = 0.10mH, R_G = 25Ω, I_{AS} = 75A, V_{GS} =10V. Part not recommended for use above this value.
③ Pulse width ≤ 1.0ms; duty cycle ≤ 2%.
④ C_{oss} eff. is a fixed capacitance that gives the same charging time as C_{oss} while V_{DS} is rising from 0 to 80% V_{DSS}.
⑤ Limited by T_{Jmax} , see Fig.12a, 12b, 15, 16 for typical repetitive avalanche performance.
⑥ This value determined from sample failure population, 100% tested to this value in production.
⑦ This is applied to D^2Pak When mounted on 1" square PCB (FR-4 or G-10 Material). For recommended footprint and soldering techniques refer to application note #AN-994
⑧ R_θ is measured at T_J approximately 90°C
⑨ Calculated continuous current based on maximum allowable junction temperature. Bond wire current limit is 160A. Note that current limitations arising from heating of the device leads may occur with some lead mounting arrangements. (Refer to AN-1140)
⑩ All AC and DC test condition based on old Package limitation current = 75A.

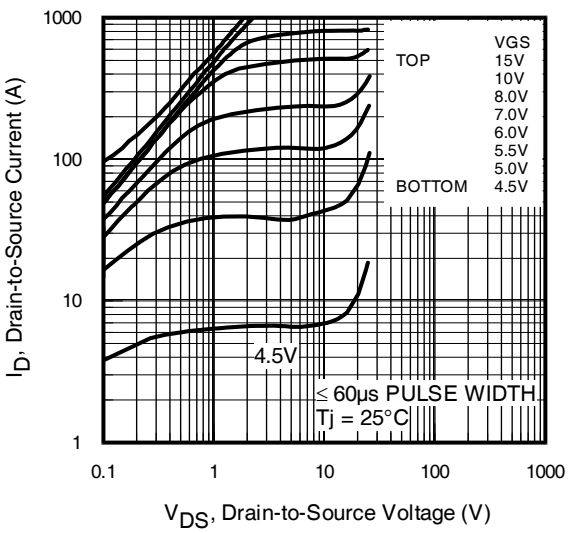

Fig. 1 Typical Output Characteristics

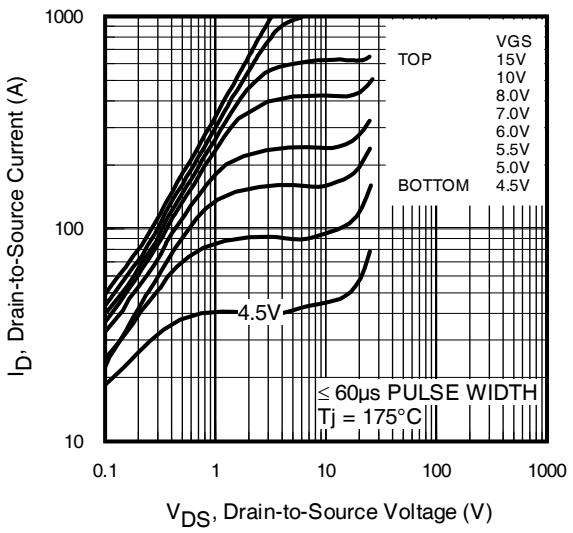

Fig. 2 Typical Output Characteristics

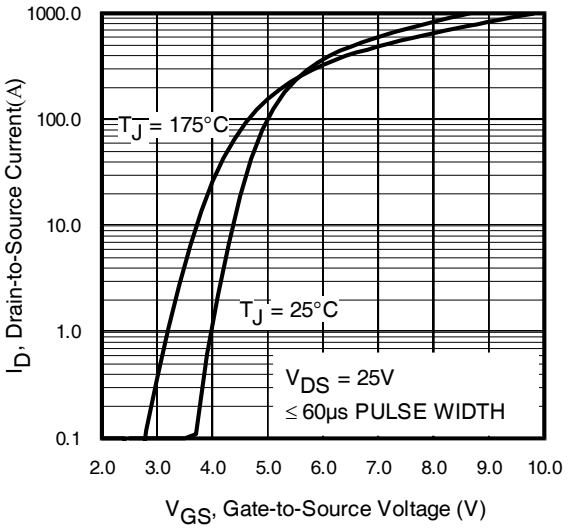

Fig. 3 Typical Transfer Characteristics

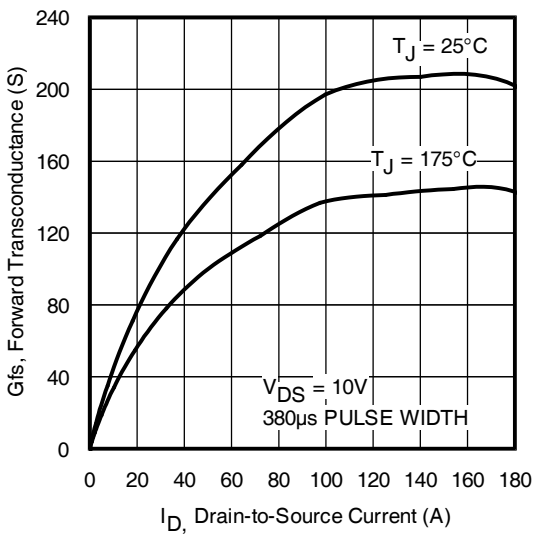

Fig. 4 Typical Forward Transconductance vs. Drain Current

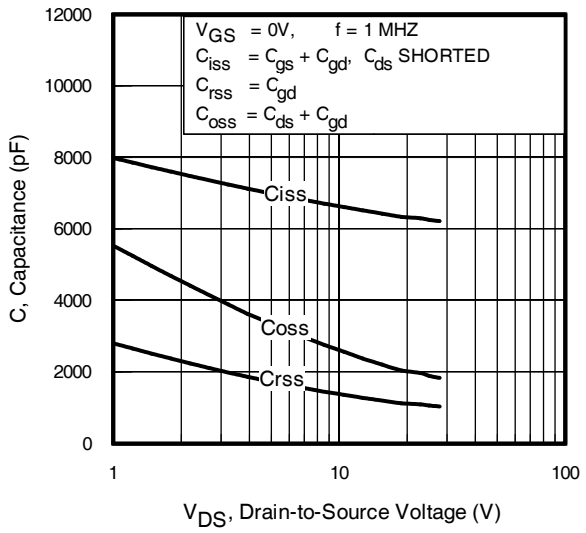

Fig 5. Typical Capacitance vs. Drain-to-Source Voltage

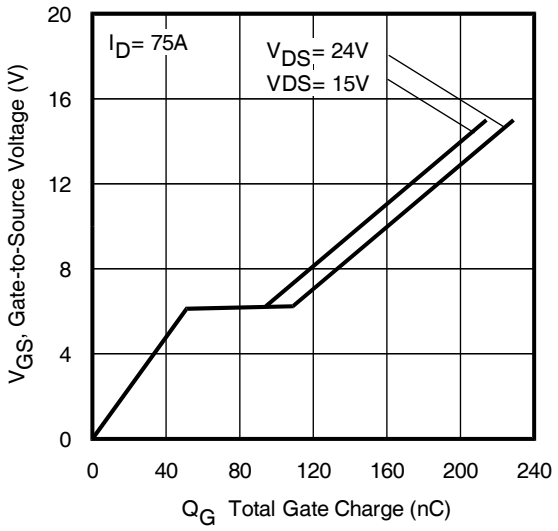

Fig 6. Typical Gate Charge vs. Gate-to-Source Voltage

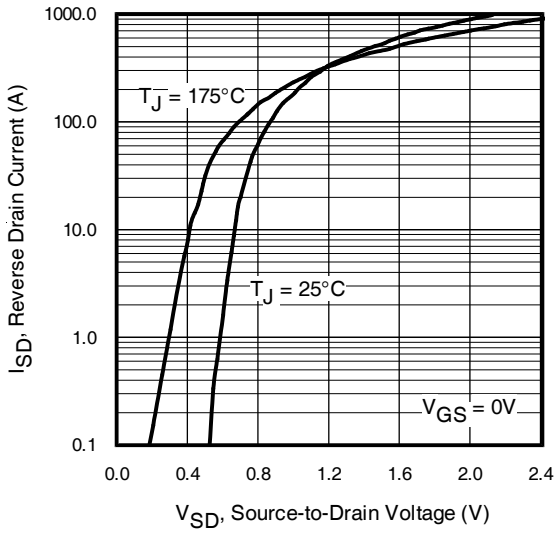

Fig. 7 Typical Source-to-Drain Diode Forward Voltage

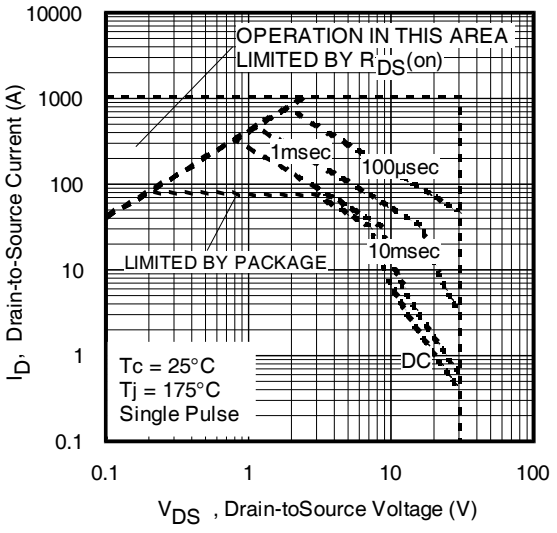

Fig 8. Maximum Safe Operating Area

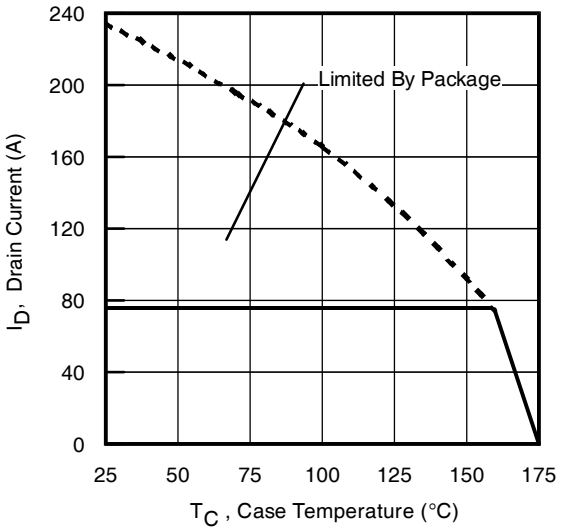

Fig 9. Maximum Drain Current vs. Case Temperature

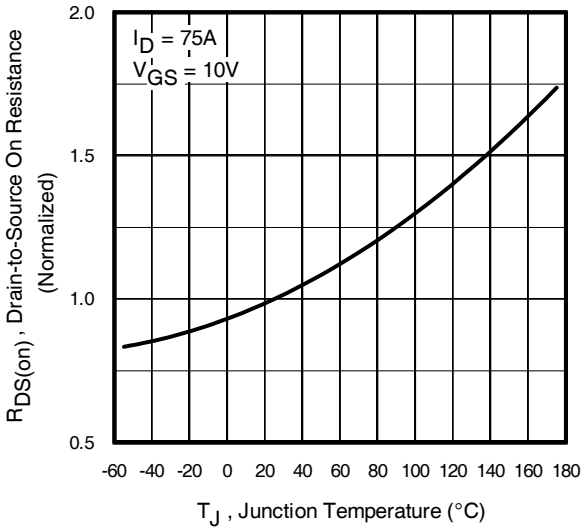

Fig 10. Normalized On-Resistance vs. Temperature

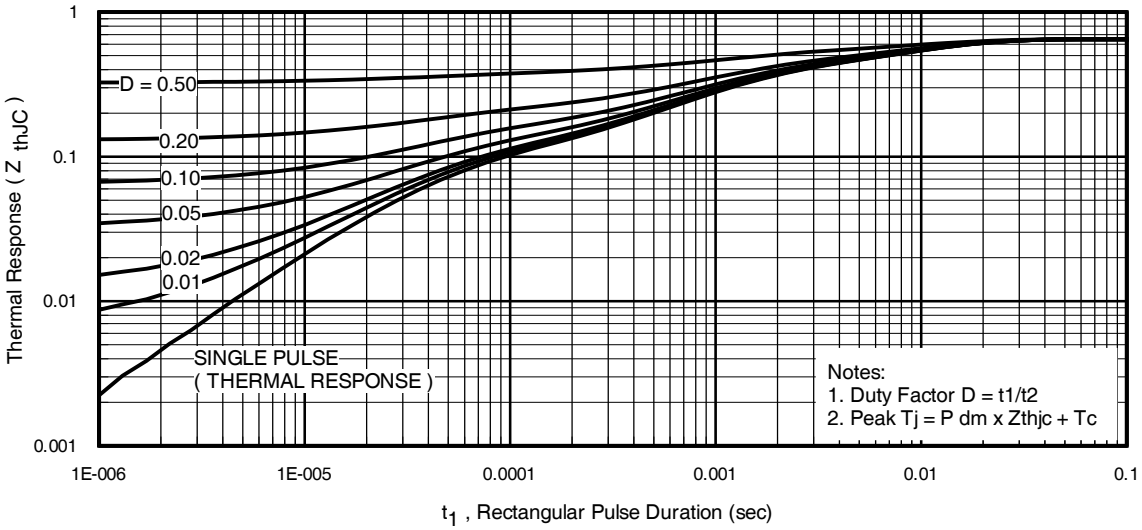

Fig 11. Maximum Effective Transient Thermal Impedance, Junction-to-Case

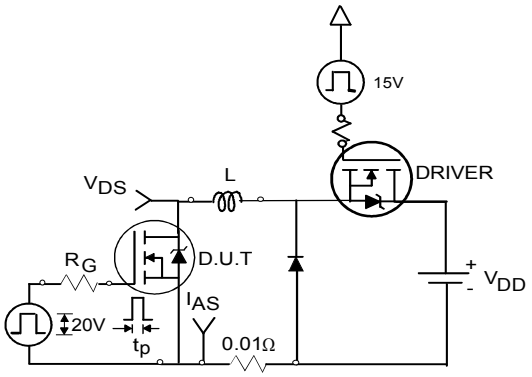

Fig 12a. Unclamped Inductive Test Circuit

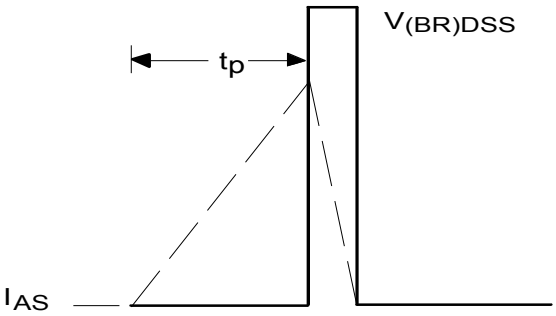

Fig 12b. Unclamped Inductive Waveforms

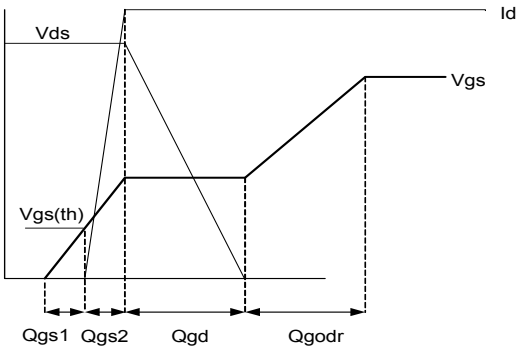

Fig 13a. Gate Charge Waveform

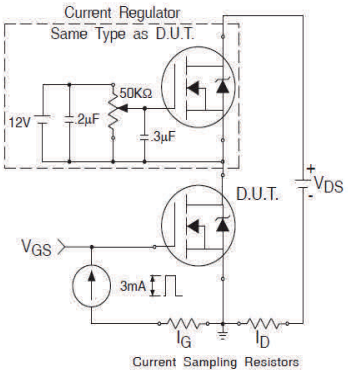

Fig 13b. Gate Charge Test Circuit

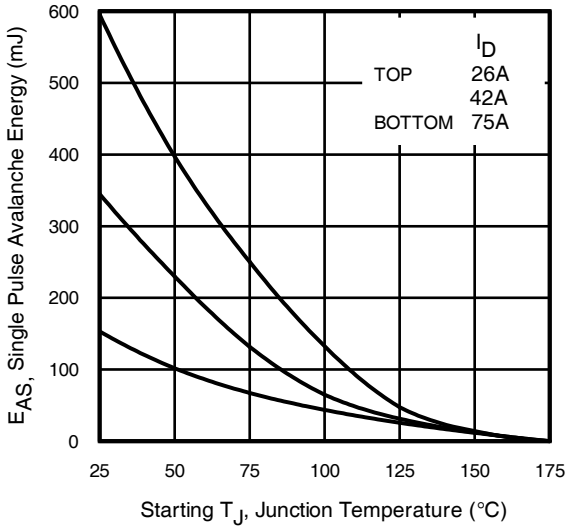

Fig 12c. Maximum Avalanche Energy vs. Drain Current

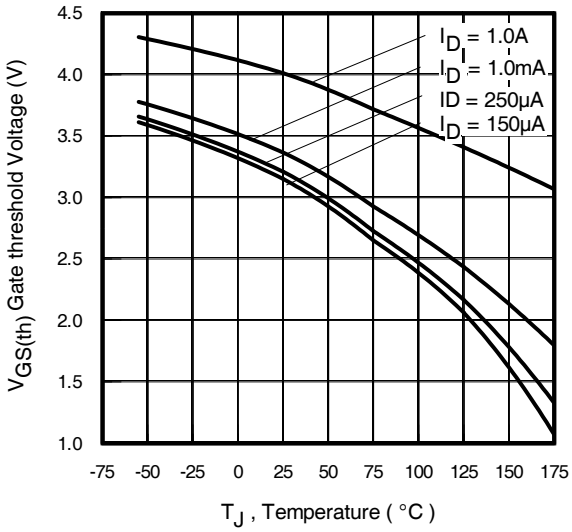

Fig 14. Threshold Voltage vs. Temperature

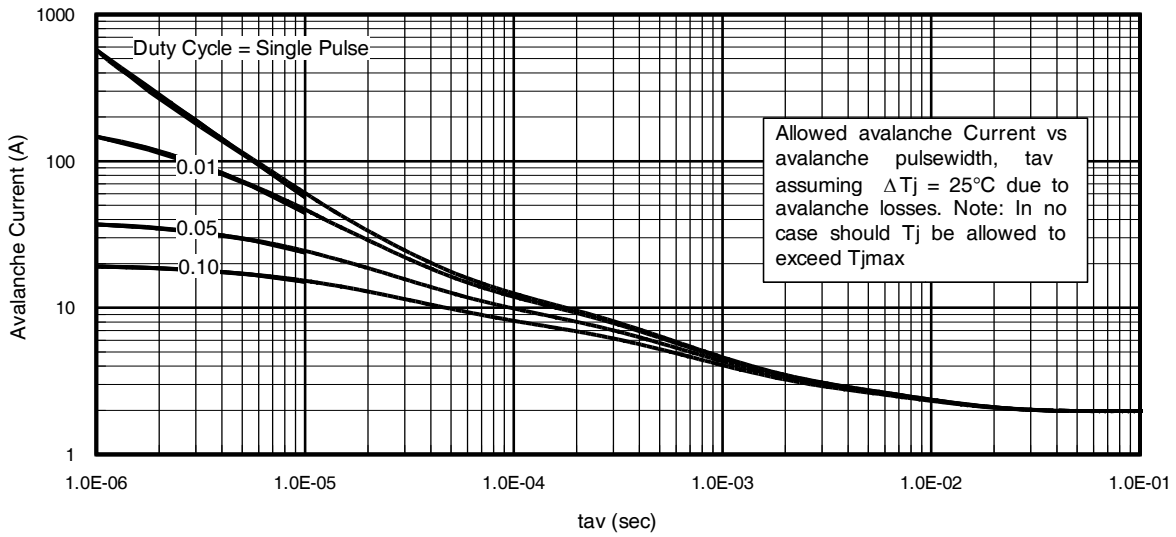

Fig 15. Typical Avalanche Current vs. Pulse width

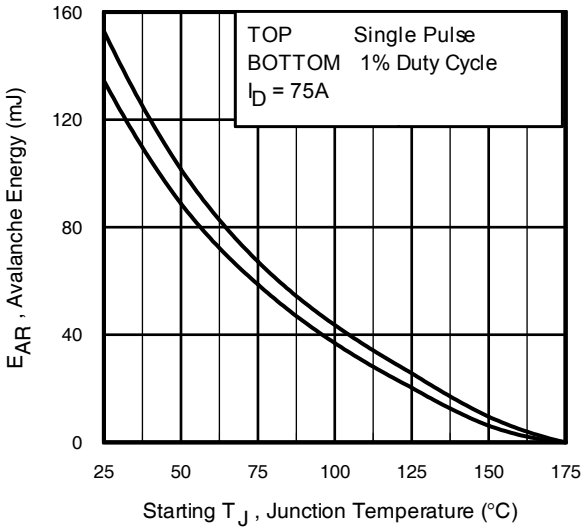

Fig 16. Maximum Avalanche Energy vs. Temperature

Notes on Repetitive Avalanche Curves , Figures 15, 16:
(For further info, see AN-1005 at www.infineon.com)

1. Avalanche failures assumption:
   Purely a thermal phenomenon and failure occurs at a temperature far in excess of T_{jmax}. This is validated for every part type.
2. Safe operation in Avalanche is allowed as long as T_{jmax} is not exceeded.
3. Equation below based on circuit and waveforms shown in Figures 12a, 12b.
4. $P_{D\ (ave)}$ = Average power dissipation per single avalanche pulse.
5. BV = Rated breakdown voltage (1.3 factor accounts for voltage increase during avalanche).
6. I_{av} = Allowable avalanche current.
7. ΔT = Allowable rise in junction temperature, not to exceed T_{jmax} (assumed as 25°C in Figure 15, 16).
   t_{av} = Average time in avalanche.
   D = Duty cycle in avalanche = $t_{av} \cdot f$
   $Z_{thJC}(D, t_{av})$ = Transient thermal resistance, see Figures 13)

$$P_{D\ (ave)} = 1/2\ (1.3 \cdot BV \cdot I_{av}) = \Delta T / Z_{thJC}$$
$$I_{av} = 2\Delta T / [1.3 \cdot BV \cdot Z_{th}]$$
$$E_{AS\ (AR)} = P_{D\ (ave)} \cdot t_{av}$$

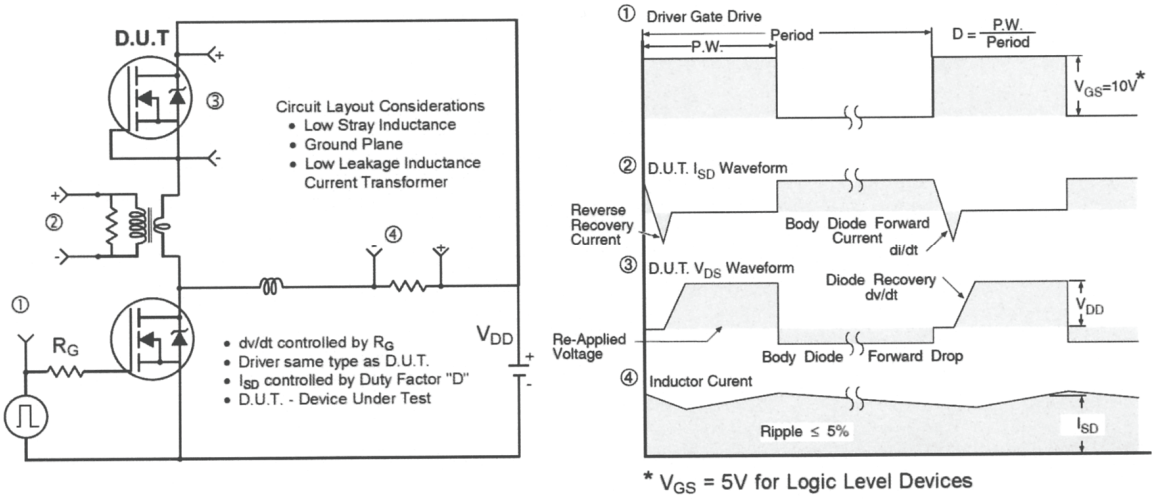

Fig 17. Peak Diode Recovery dv/dt Test Circuit for N-Channel HEXFET® Power MOSFETs

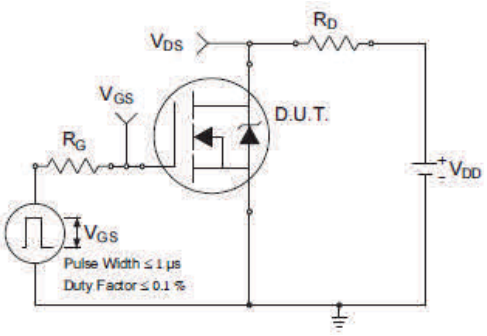

Fig 18a. Switching Time Test Circuit

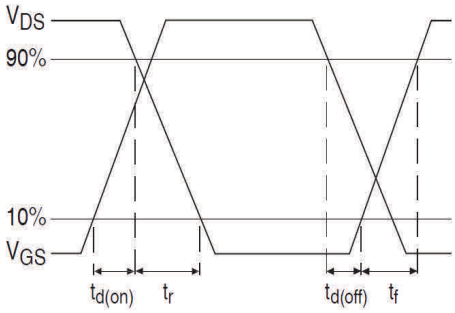

Fig 18b. Switching Time Waveforms

D²Pak (TO-263AB) Package Outline (Dimensions are shown in millimeters (inches))

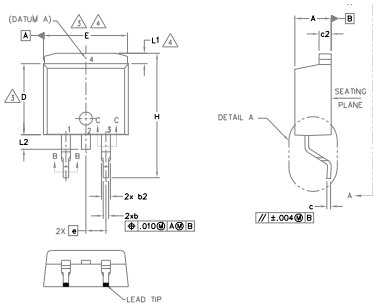

NOTES:

1. DIMENSIONING AND TOLERANCING PER ASME Y14.5M-1994
2. DIMENSIONS ARE SHOWN IN MILLIMETERS [INCHES].
3. DIMENSION D & E DO NOT INCLUDE MOLD FLASH. MOLD FLASH SHALL NOT EXCEED 0.127 [.005"] PER SIDE. THESE DIMENSIONS ARE MEASURED AT THE OUTMOST EXTREMES OF THE PLASTIC BODY AT DATUM H.
4. THERMAL PAD CONTOUR OPTIONAL WITHIN DIMENSION E, L1, D1 & E1.
5. DIMENSION b1, b3 AND c1 APPLY TO BASE METAL ONLY.
6. DATUM A & B TO BE DETERMINED AT DATUM PLANE H.
7. CONTROLLING DIMENSION: INCH.
8. OUTLINE CONFORMS TO JEDEC OUTLINE TO-263AB.

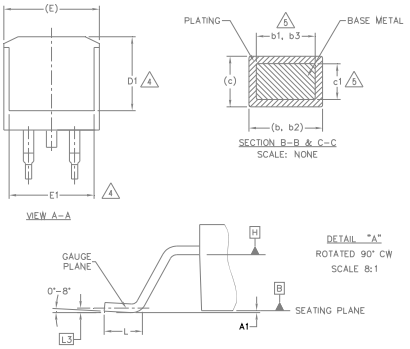

SYMBOL	DIMENSIONS				NOTES
	MILLIMETERS		INCHES		
	MIN.	MAX.	MIN.	MAX.	
A	4.06	4.83	.160	.190	
A1	0.00	0.254	.000	.010	
b	0.51	0.99	.020	.039	
b1	0.51	0.89	.020	.035	5
b2	1.14	1.78	.045	.070	
b3	1.14	1.73	.045	.068	5
c	0.38	0.74	.015	.029	
c1	0.38	0.58	.015	.023	5
c2	1.14	1.65	.045	.065	
D	8.38	9.65	.330	.380	3
D1	6.86	—	.270	—	4
E	9.65	10.67	.380	.420	3,4
E1	6.22	—	.245	—	4
e	2.54 BSC		.100 BSC		
H	14.61	15.88	.575	.625	
L	1.78	2.79	.070	.110	
L1	—	1.68	—	.066	4
L2	—	1.78	—	.070	
L3	0.25 BSC		.010 BSC		

LEAD ASSIGNMENTS

DIODES
1.– ANODE (TWO DIE) / OPEN (ONE DIE)
2, 4.– CATHODE
3.– ANODE

HEXFET
1.– GATE
2, 4.– DRAIN
3.– SOURCE

IGBTs, CoPACK
1.– GATE
2, 4.– COLLECTOR
3.– EMITTER

D²Pak (TO-263AB) Part Marking Information

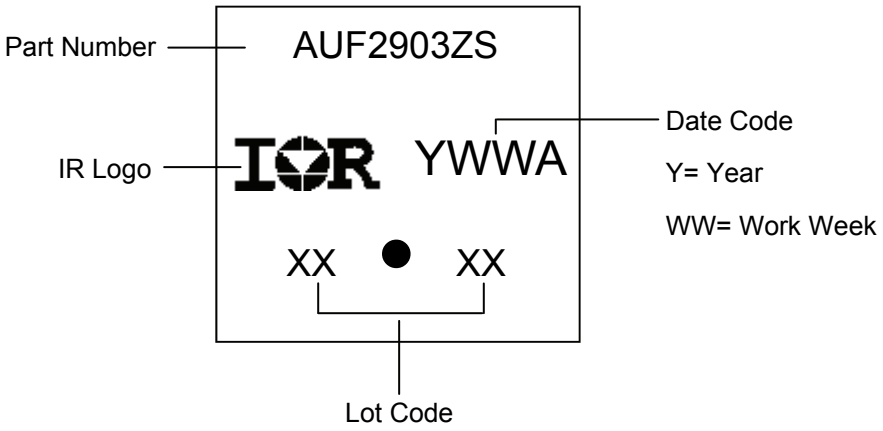

TO-262 Package Outline (Dimensions are shown in millimeters (inches)

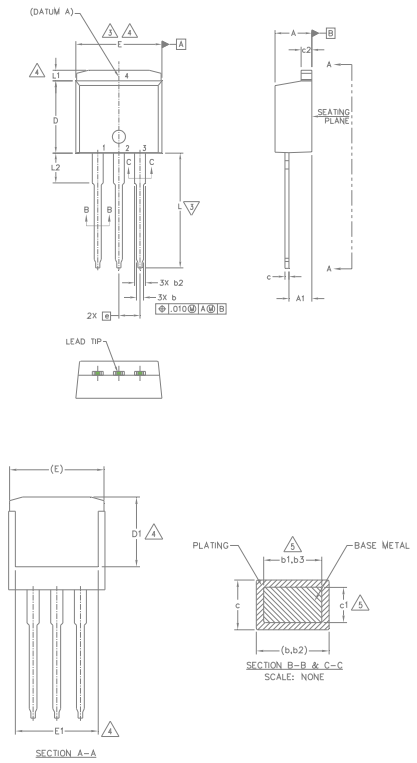

NOTES:

1. DIMENSIONING AND TOLERANCING PER ASME Y14.5M-1994
2. DIMENSIONS ARE SHOWN IN MILLIMETERS [INCHES].
3. DIMENSION D & E DO NOT INCLUDE MOLD FLASH. MOLD FLASH SHALL NOT EXCEED 0.127 [.005"] PER SIDE. THESE DIMENSIONS ARE MEASURED AT THE OUTMOST EXTREMES OF THE PLASTIC BODY.
4. THERMAL PAD CONTOUR OPTIONAL WITHIN DIMENSION E, L1, D1 & E1.
5. DIMENSION b1 AND c1 APPLY TO BASE METAL ONLY.
6. CONTROLLING DIMENSION: INCH.
7.- OUTLINE CONFORM TO JEDEC TO-262 EXCEPT A1(max.), b(min.) AND D1(min.) WHERE DIMENSIONS DERIVED THE ACTUAL PACKAGE OUTLINE.

LEAD ASSIGNMENTS

IGBTs, CoPACK

1.- GATE
2.- COLLECTOR
3.- EMITTER
4.- COLLECTOR

HEXFET

1.- GATE
2.- DRAIN
3.- SOURCE
4.- DRAIN

DIODES

1.- ANODE (TWO DIE) / OPEN (ONE DIE)
2, 4.- CATHODE
3.- ANODE

SYMBOL	DIMENSIONS				NOTES
	MILLIMETERS		INCHES		
	MIN.	MAX.	MIN.	MAX.	
A	4.06	4.83	.160	.190	
A1	2.03	3.02	.080	.119	
b	0.51	0.99	.020	.039	
b1	0.51	0.89	.020	.035	5
b2	1.14	1.78	.045	.070	
b3	1.14	1.73	.045	.068	5
c	0.38	0.74	.015	.029	
c1	0.38	0.58	.015	.023	5
c2	1.14	1.65	.045	.065	
D	8.38	9.65	.330	.380	3
D1	6.86	–	.270	–	4
E	9.65	10.67	.380	.420	3,4
E1	6.22	–	.245		4
e	2.54 BSC		.100 BSC		
L	13.46	14.10	.530	.555	
L1	–	1.65	–	.065	4
L2	3.56	3.71	.140	.146	

TO-262 Part Marking Information

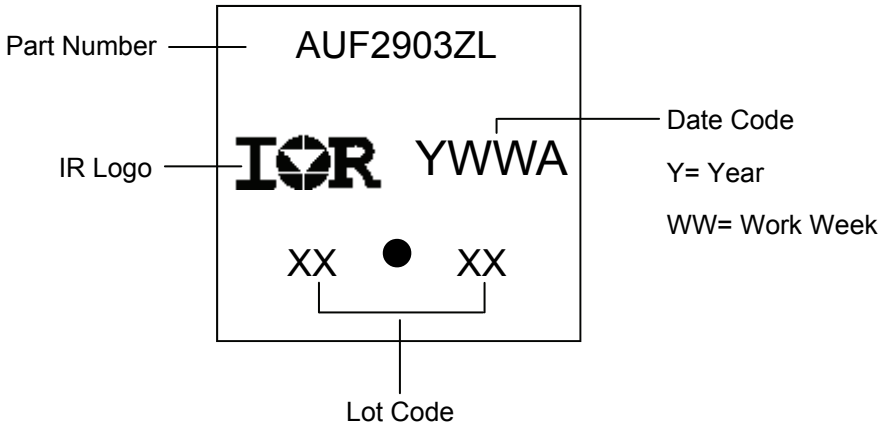

D²Pak (TO-263AB) Tape & Reel Information (Dimensions are shown in millimeters (inches))

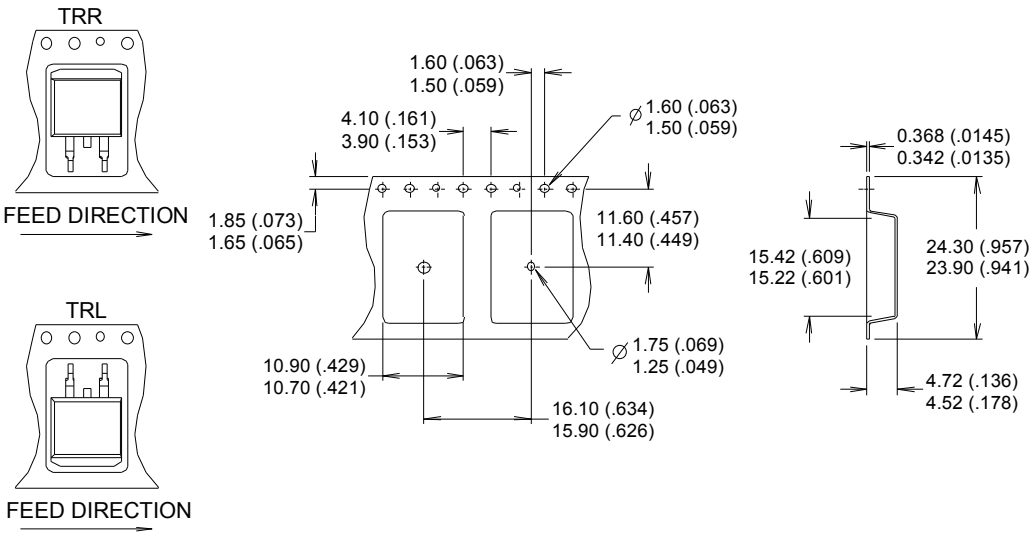

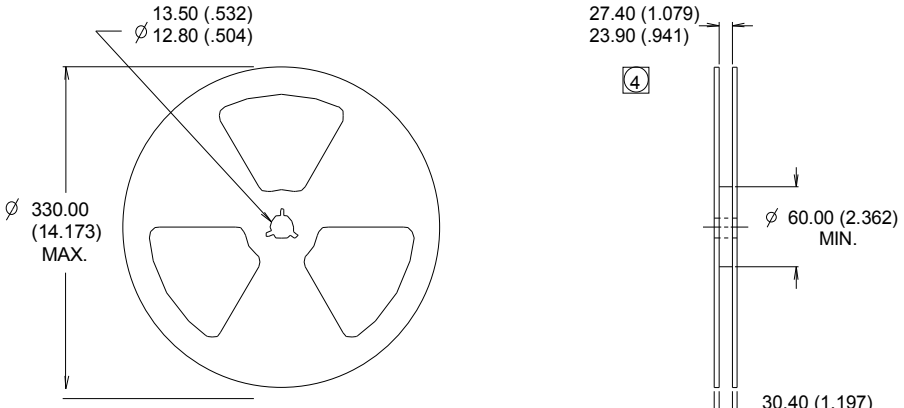

NOTES :
1. COMFORMS TO EIA-418.
2. CONTROLLING DIMENSION: MILLIMETER.
3. DIMENSION MEASURED @ HUB.
4. INCLUDES FLANGE DISTORTION @ OUTER EDGE.

Qualification Information

Qualification Level		Automotive (per AEC-Q101)	
		Comments: This part number(s) passed Automotive qualification. Infineon's Industrial and Consumer qualification level is granted by extension of the higher Automotive level.	
Moisture Sensitivity Level		TO-262	MSL1
		D^2-Pak	
ESD	Machine Model	Class M4(+/- 800V)† AEC-Q101-002	
	Human Body Model	Class H2(+/- 4000V)† AEC-Q101-001	
	Charged Device Model	Class C5(+/- 2000V)† AEC-Q101-005	
RoHS Compliant		Yes	

† Highest passing voltage.

Revision History

Date	Comments
9/30/2015	• Updated datasheet with corporate template • Corrected ordering table on page 1.

Published by
Infineon Technologies AG
81726 München, Germany
© Infineon Technologies AG 2015
All Rights Reserved.

IMPORTANT NOTICE

The information given in this document shall in no event be regarded as a guarantee of conditions or characteristics ("Beschaffenheitsgarantie"). With respect to any examples, hints or any typical values stated herein and/or any information regarding the application of the product, Infineon Technologies hereby disclaims any and all warranties and liabilities of any kind, including without limitation warranties of non-infringement of intellectual property rights of any third party.

In addition, any information given in this document is subject to customer's compliance with its obligations stated in this document and any applicable legal requirements, norms and standards concerning customer's products and any use of the product of Infineon Technologies in customer's applications.

The data contained in this document is exclusively intended for technically trained staff. It is the responsibility of customer's technical departments to evaluate the suitability of the product for the intended application and the completeness of the product information given in this document with respect to such application.

For further information on the product, technology, delivery terms and conditions and prices please contact your nearest Infineon Technologies office (www.infineon.com).

WARNINGS

Due to technical requirements products may contain dangerous substances. For information on the types in question please contact your nearest Infineon Technologies office.

Except as otherwise explicitly approved by Infineon Technologies in a written document signed by authorized representatives of Infineon Technologies, Infineon Technologies' products may not be used in any applications where a failure of the product or any consequences of the use thereof can reasonably be expected to result in personal injury.