THIS DRAWING IS UNPUBLISHED. RELEASED FOR PUBLICATION -,- .
© COPYRIGHT - By - ALL RIGHTS RESERVED.

LOC	DIST
FT	0

REVISIONS

P	LTR	DESCRIPTION	DATE	DWN	APVD
	B	REVISED PER ECO-12-017740	08OCT12	KH	MB

1. MATERIAL: ALUMINUM.
2. FOR USE WITH DOVETAIL BASE TERMINAL BLOCKS.

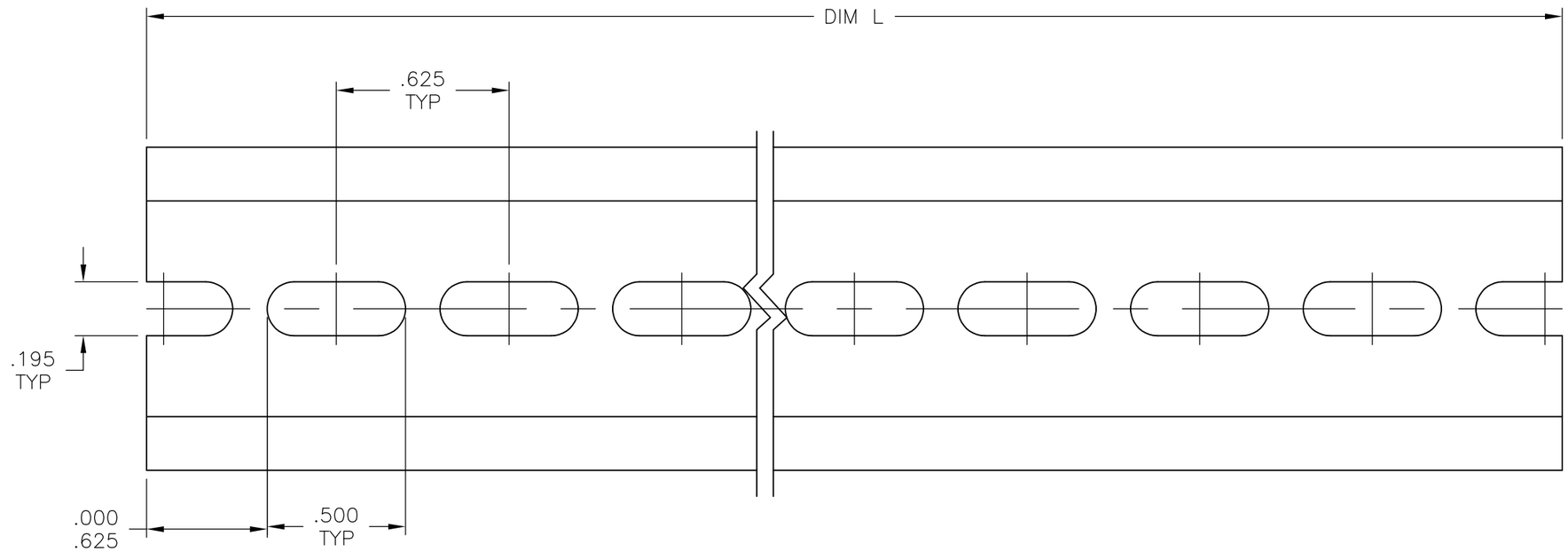

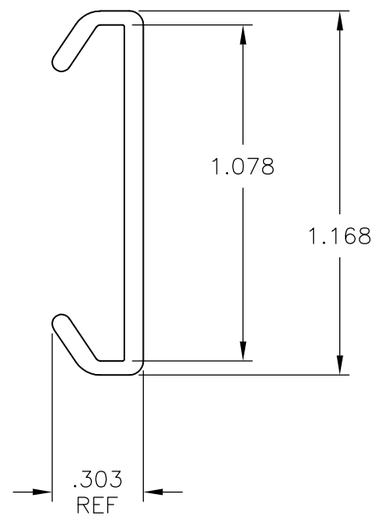

DIM L	DESCRIPTION	CATALOG NUMBER	PART NUMBER
36"	PRE-PUNCHED CHANNEL, ALUM, 3FT	67	1437382-2
72"	PRE-PUNCHED CHANNEL, ALUM, 6FT	64	9-1437381-9

THIS DRAWING IS A CONTROLLED DOCUMENT.

DIMENSIONS: INCHES

TOLERANCES UNLESS OTHERWISE SPECIFIED:

0 PLC	± -
1 PLC	± -
2 PLC	± .015
3 PLC	± .010
4 PLC	± -
ANGLES	± -

MATERIAL: 1

FINISH: -

DWN S SCHLEGEL 25JUN03
CHK S YODER 6/25/03
APVD S YODER 6/25/03
PRODUCT SPEC —
APPLICATION SPEC —
WEIGHT —

TE Connectivity

NAME: CHANNEL EXTRUDED FOR DOVETAIL BLOCKS —

SIZE	CAGE CODE	DRAWING NO	RESTRICTED TO
A3	00779	C-9-1437381-9	—

CUSTOMER DRAWING | SCALE 2:1 | SHEET 1 OF 1 | REV B

1470-19 (3/11)