19-0185; Rev 1; 11/94

Precision, CMOS Analog Switches

General Description

The MAX317/MAX318/MAX319 are precision, CMOS, monolithic analog switches. The single-pole single-throw (SPST) MAX317 is normally closed (NC), the SPST MAX318 is normally open (NO), and the single-pole double-throw (SPDT) MAX319 has one normally open and one normally closed switch. All three parts offer low on resistance (less than 35Ω), guaranteed to match within 2Ω between channels and to remain flat over the analog signal range (Δ3Ω max). They also offer low leakage (less than 250pA at +25°C and less than 6nA at +85°C) and fast switching (turn-on time less than 175ns and turn-off time less than 145ns).

The MAX317/MAX318/MAX319 are fabricated with Maxim's new improved silicon-gate process. Design improvements guarantee extremely low charge injection (10pC), low power consumption (35µW), and electrostatic discharge (ESD) greater than ±2000V. The 44V maximum breakdown voltage allows rail-to-rail analog signal handling capability.

Applications

Sample-and-Hold Circuits
Guidance and Control Systems
Heads-Up Displays
Test Equipment
Military Radios
Communications Systems
Battery-Powered Systems
PBX, PABX

Features

- **Low On Resistance <20Ω Typical (35Ω Max)**
- **Guaranteed Matched On Resistance Between Channels <2Ω**
- **Guaranteed Flat On Resistance over Analog Signal Range Δ3Ω Max**
- **Guaranteed Charge Injection <10pC**
- **Guaranteed Off-Channel Leakage <6nA at +85°C**
- **ESD Guaranteed > 2000V per Method 3015.7**
- **Single-Supply Operation (+10V to +30V) Bipolar-Supply Operation (±4.5V to ±20V)**
- **TTL-/CMOS-Logic Compatible**
- **Rail-to-Rail Analog Signal Handling Capability**

Ordering Information

PART	TEMP. RANGE	PIN-PACKAGE
MAX317CPA	0°C to +70°C	8 Plastic DIP
MAX317CSA	0°C to +70°C	8 SO
MAX317CJA	0°C to +70°C	8 CERDIP
MAX317C/D	0°C to +70°C	Dice*
MAX317EPA	-40°C to +85°C	8 Plastic DIP
MAX317ESA	-40°C to +85°C	8 SO
MAX317EJA	-40°C to +85°C	8 CERDIP
MAX317MJA	-55°C to +125°C	8 CERDIP

Ordering Information continued on last page.
** Contact factory for dice specifications.*

Pin Configurations/Functional Diagrams/Truth Tables

TOP VIEW

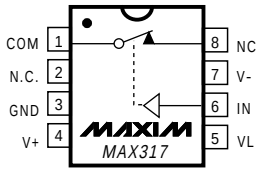

DIP/SO

MAX317	
LOGIC	SWITCH
0	ON
1	OFF

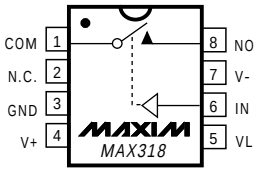

DIP/SO

MAX318	
LOGIC	SWITCH
0	OFF
1	ON

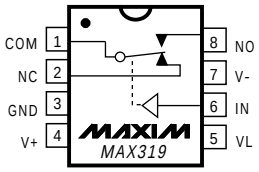

DIP/SO

MAX319		
LOGIC	NC	NO
0	ON	OFF
1	OFF	ON

N.C. = No Connect
NC = Normally Closed

SWITCHES SHOWN FOR LOGIC "0" INPUT

Call toll free 1-800-998-8800 for free samples or literature.

ABSOLUTE MAXIMUM RATINGS

Voltage Referenced to V-
- V+ ..... +44V
- GND ..... +25V
- V_L ..... (GND - 0.3V) to (V+ + 0.3V)
- IN, COM, NC, NO ..... (V- - 2V) to (V+ + 2V) or 30mA, whichever occurs first

Continuous Current (any terminal) 30mA
Peak Current, NC, NO, COM
- (pulsed at 1ms, 10% duty cycle max) 100mA

ESD ..... ±2000V

Continuous Power Dissipation (T_A = +70°C) (Note 1)
- Plastic DIP (derate 9.09mW/°C above +70°C) 727mW
- SO (derate 5.88mW/°C above +70°C) 471mW
- CERDIP (derate 8.00mW/°C above +70°C) 640mW

Operating Temperature Ranges:
- MAX31_C_ _ ..... 0°C to +70°C
- MAX31_E_ _ ..... -40°C to +85°C
- MAX31_MJA ..... -55°C to +125°C

Storage Temperature Range ..... -55°C to +150°C
Lead Temperature (soldering, 10sec) ..... +300°C

Note 1: All leads are soldered or welded to PC board.

Stresses beyond those listed under "Absolute Maximum Ratings" may cause permanent damage to the device. These are stress ratings only, and functional operation of the device at these or any other conditions beyond those indicated in the operational sections of the specifications is not implied. Exposure to absolute maximum rating conditions for extended periods may affect device reliability.

ELECTRICAL CHARACTERISTICS — Dual Supplies

(V+ = 15V, V- = -15V, V_L = 5V, GND = 0V, V_{INL} = 0.8V, V_{INH} = 2.4V, T_A = T_{MIN} to T_{MAX}, unless otherwise noted.)

PARAMETER	SYMBOL	CONDITIONS		TEMP.		MIN	TYP (Note 2)	MAX	UNITS
Analog-Signal Range	V_{COM}, V_{NO}, V_{NC}	(Note 3)				-15		15	V
On Resistance	R_{ON}	V_{COM} = ±12.5V, $I_{(NC\ or\ NO)}$ = -10mA, V+ = 13.5V, V- = -13.5V		T_A = +25°C	C, E		20	35	Ω
					M			30	
				T_A = T_{MIN} to T_{MAX}				45	
On Resistance Match Between Channels (Note 4)	R_{ON}	$I_{(NC\ OR\ NO)}$ = -10mA, V_{COM} = 10V or -10V, V+ = 15V, V- = -15V		T_A = +25°C				2	Ω
				T_A = T_{MIN} to T_{MAX}				3	
On Resistance Flatness (Note 4)	R_{ON}	$I_{(NC\ OR\ NO)}$ = -10mA, V_{COM} = 5V or -5V, V+ = 15V, V- = -15V		T_A = +25°C				3	Ω
				T_A = T_{MIN} to T_{MAX}				5	
NO or NC Off Leakage Current	$I_{NC(OFF)}$ or $I_{NO(OFF)}$	V+ = 16.5V, V- = -16.5V, V_{COM} = ±15.5V, V_{NC} or V_{NO} = ±15.5V		T_A = +25°C		-0.25		0.25	nA
				C, E		-6		6	
				M		-20		20	
COM Off Leakage Current	$I_{COM(OFF)}$	V+ = 16.5V, V- = -16.5V, V_{COM} = ±15.5V, V_{NC} or V_{NO} = ∓15.5V	MAX317, MAX318	T_A = +25°C		-0.25	-0.1	0.25	nA
				C, E		-6		6	
				M		-20		20	
			MAX319	T_A = +25°C		-0.75	-0.1	0.75	
				C, E		-10		10	
				M		-60		60	
COM On Leakage Current	$I_{COM(ON)}$	V+ = 16.5V, V- = -16.5V, V_{NC} or V_{NO} = V_D = ±15.5V	MAX317, MAX318	T_A = +25°C		-0.4		0.4	nA
				C, E		-10		10	
				M		-40		40	
			MAX319	T_A = +25°C		-0.75		0.75	
				C, E		-10		10	
				M		-60		60	

ELECTRICAL CHARACTERISTICS — Dual Supplies (continued)

(V+ = 15V, V- = -15V, V_L = 5V, GND = 0V, V_{INL} = 0.8V, V_{INH} = 2.4V, T_A = T_{MIN} to T_{MAX}, unless otherwise noted.)

PARAMETER	SYMBOL	CONDITIONS	TEMP.	MIN	TYP (Note 2)	MAX	UNITS
LOGIC INPUT							
Logic Input Current (Input Voltage High)	I_{IH}	V_{IN} = 2.4V		-0.5	0.005	0.5	µA
Logic Input Current (Input Voltage Low)	I_{IL}	V_{IN} = 0.8V		-0.5	0.005	0.5	µA
DYNAMIC							
Turn-On Time	t_{ON}	MAX317, MAX318, Figure 2, V_{COM} = ±10V	T_A = +25°C		100	175	ns
			T_A = T_{MIN} to T_{MAX}			250	
Turn-Off Time	t_{OFF}	MAX317, MAX318, Figure 2, V_{COM} = ±10V	T_A = +25°C		60	145	ns
			T_A = T_{MIN} to T_{MAX}			210	
Transition Time	t_{TRANS}	MAX319, Figure 3, V_{NO} = ±10V, V_{NC} = ±10V	T_A = +25°C			175	ns
			T_A = T_{MIN} to T_{MAX}			250	
Break-Before-Make Interval	t_D	MAX319, Figure 4, V_{NO} = V_{NC} = ±10V	T_A = +25°C	5	13		ns
Charge Injection	Q	V_{GEN} = 0V, Figure 5	T_A = +25°C		3	10	pC
Off Isolation (Note 5)	OIRR	R_L = 50Ω, C_L = 5pF, f = 1MHz, Figure 7	T_A = +25°C		68		dB
Crosstalk (Note 6)		R_L = 50Ω, C_L = 5pF, f = 1MHz, Figure 8	T_A = +25°C		85		dB
COM Off Capacitance	$C_{COM(OFF)}$	V_{COM} = 0V, f = 1MHz, Figure 8	T_A = +25°C		8		pF
Off Capacitance NC or NO	$C_{(OFF)}$	V_{COM} = 0V, f = 1MHz, Figure 8	T_A = +25°C		8		pF
Channel-On Capacitance COM Terminal	$C_{COM(ON)}$	V_S = 0V, f = 1MHz, Figure 9 — MAX317, MAX318	T_A = +25°C		30		pF
		V_S = 0V, f = 1MHz, Figure 9 — MAX319	T_A = +25°C		35		pF
SUPPLY							
Positive Supply Current	I+	V_{IN} = 0V or 5V, V+ = 16.5V, V- = -16.5V	T_A = +25°C	-1	0.0001	1	µA
			T_A = T_{MIN} to T_{MAX}	-5		5	
Negative Supply Current	I-	V_{IN} = 0V or 5V, V+ = 16.5V, V- = -16.5V	T_A = +25°C	-1	-0.0001	1	µA
			T_A = T_{MIN} to T_{MAX}	-5		5	
Logic Supply Current	I_L	V_{IN} = 0V or 5V, V+ = 16.5V, V- = -16.5V	T_A = +25°C	-1	0.0001	1	µA
			T_A = T_{MIN} to T_{MAX}	-5		5	
Ground Current	I_{GND}	V_{IN} = 0V or 5V, V+ = 16.5V, V- = -16.5V	T_A = +25°C	-1	-0.0001	1	µA
			T_A = T_{MIN} to T_{MAX}	-5		5	

ELECTRICAL CHARACTERISTICS — Single Supply

(V+ = 12V, V- = 0V, V_L = 5V, GND = 0V, V_{INH} = 2.4V, V_{INL} = 0.8V, T_A = +25°C, unless otherwise noted.)

PARAMETER	SYMBOL	CONDITIONS	MIN	TYP (Note 2)	MAX	UNITS
SWITCH						
Analog-Signal Range	V_{COM}, V_{NO}, V_{NC}	(Note 3)	0		12	V
Drain-Source On Resistance	$R_{(ON)}$	$I_{(NC\ or\ NO)}$ = -10mA, V_{COM} = 3.8V, V+ = 10.8V		40	100	Ω
DYNAMIC						
Turn-On Time	t_{ON}	V_{COM} = 8V, Figure 2		110		ns
Turn-Off Time	t_{OFF}	V_{COM} = 8V, Figure 2		40		ns
Break-Before-Make Time Delay	t_D	MAX319, R_L = 1000Ω, C_L = 35pF, Figure 4		60		ns
Charge Injection	Q	C_L = 10nF, V_{GEN} = 0V, R_{GEN} = 0V, Figure 5		2	10	pC
SUPPLY						
Positive Supply Current	I+	V+ = 13.2V, all channels on or off, V_{IN} = 0V or 5V, V_L = 5.25V		0.0001		µA
Negative Supply Current	I-	V+ = 13.2V, all channels on or off, V_{IN} = 0V or 5V, V_L = 5.25V		0.0001		µA
Logic Supply Current	I_L	V_L = 5.25V, all channels on or off, V_{IN} = 0V or 5V		0.0001		µA
Ground Current	I_{GND}	V_L = 5.25V, all channels on or off, V_{IN} = 0V or 5V		-0.0001		µA

Note 2: Typical values are for **design aid only**, not guaranteed, not subject to production testing.
Note 3: Guaranteed by design.
Note 4: On resistance match between channels and flatness are guaranteed only with bipolar-supply operation.
Note 5: Off Isolation = $20\log_{10}\left(\frac{V_{COM}}{V_{NC}\ \text{or}\ V_{NO}}\right)$, V_{COM} = output, V_{NC} or V_{NO} = input to off switch.
Note 6: Between any two switches.

Typical Operating Characteristics

(T_A = +25°C, unless otherwise noted).

ON RESISTANCE vs. V_{COM} AND POWER-SUPPLY VOLTAGE

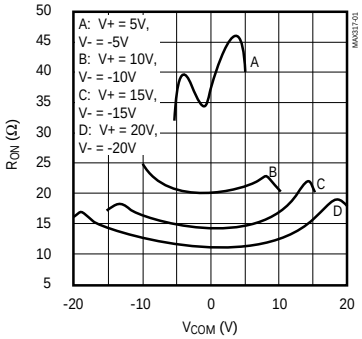

ON RESISTANCE vs. V_{COM} AND TEMPERATURE

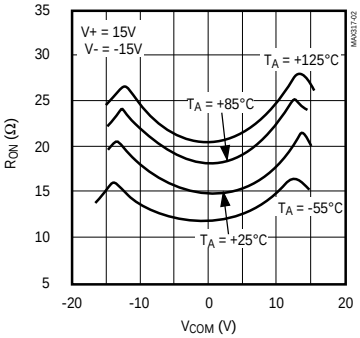

ON RESISTANCE vs. V_{COM} AND TEMPERATURE

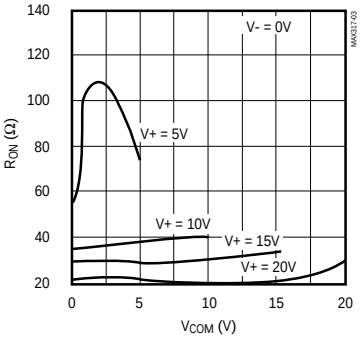

ON RESISTANCE vs. V_{COM} (SINGLE-SUPPLY)

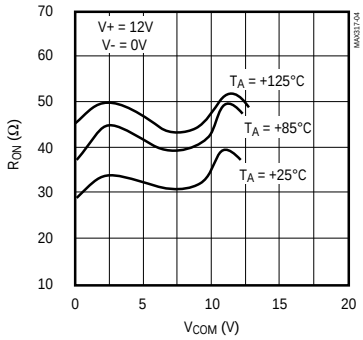

OFF LEAKAGE CURRENTS vs. TEMPERATURE

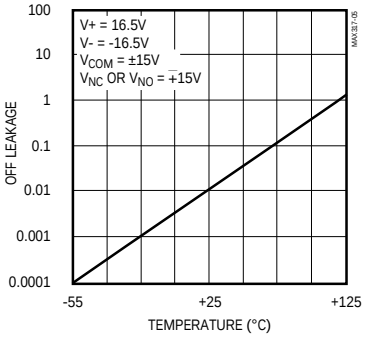

ON LEAKAGE CURRENTS vs. TEMPERATURE

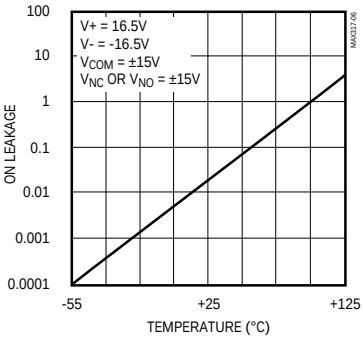

CHARGE INJECTION vs. ANALOG VOLTAGE

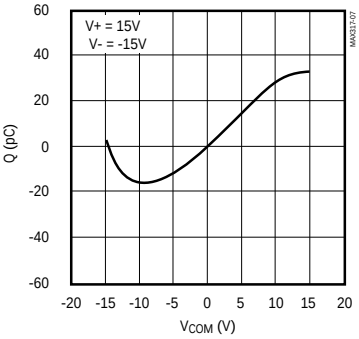

SUPPLY CURRENT vs. TEMPERATURE

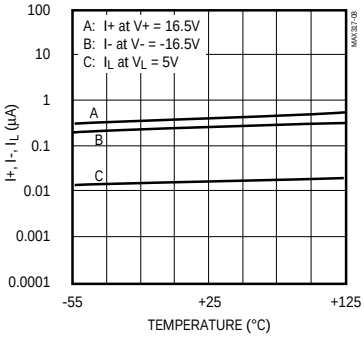

Pin Description

PIN			NAME	FUNCTION
MAX317	MAX318	MAX319		
1	1	1	COM	Analog-switch common terminal
2	2	—	N.C.	No connect — not internally connected
—	—	8	NO	Analog-switch normally open terminal
3	3	3	GND	Logic ground
4	4	4	V+	Analog-signal positive supply input
5	5	5	VL	Logic-level positive supply input
6	6	6	IN	Logic-level input
7	7	7	V-	Analog-signal negative supply input
8	—	2	NC	Analog-switch normally closed terminal
—	8	—	NO	Analog-switch normally open terminal

Applications Information

Operation with Supply Voltages Other Than ±15V

The main limitation of supply voltages other than ±15V is analog signal range reduction. The MAX317/MAX318/MAX319 switches operate with bipolar supplies of ±5V to ±20V. Typical Operating Characteristics graphs show typical on resistance for ±15V, ±10V, and ±5V supplies. Switching times increase by a factor of two or more for operation at ±5V. The MAX317/MAX318/MAX319 can operate from unipolar supplies of +10V to +30V. Both parts can also operate from unbalanced supplies such as +24V and -5V.

Connect V- to 0V when operating with a single supply. This means that VL must be connected to +5V to be TTL compatible, or to V+ for CMOS logic input levels.

Overvoltage Protection

Proper power-supply sequencing is recommended for all CMOS devices. It is important not to exceed the absolute maximum ratings because stresses beyond the listed ratings may cause permanent damage to the devices. Always sequence V+ on first, followed by VL, V-, and logic inputs. If power-supply sequencing is not possible, protect the devices from overvoltage by adding two small signal diodes in series with the supply pins (Figure 1). Adding the diodes reduces the analog signal range to 1V below V+ and 1V below V-, but low switch resistance and low leakage characteristics are unaffected. Device operation is unchanged, and the difference between V+ to V- should not exceed +44V.

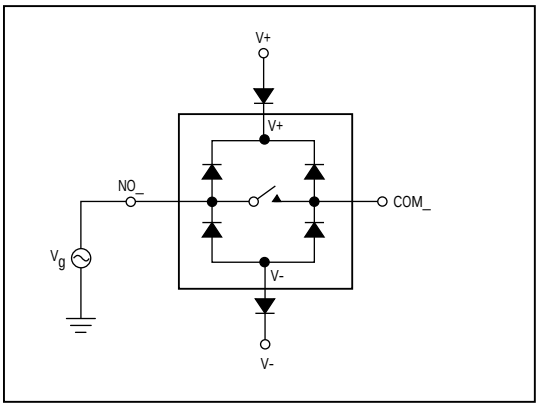

Figure 1. Overvoltage Protection Using Blocking Diodes

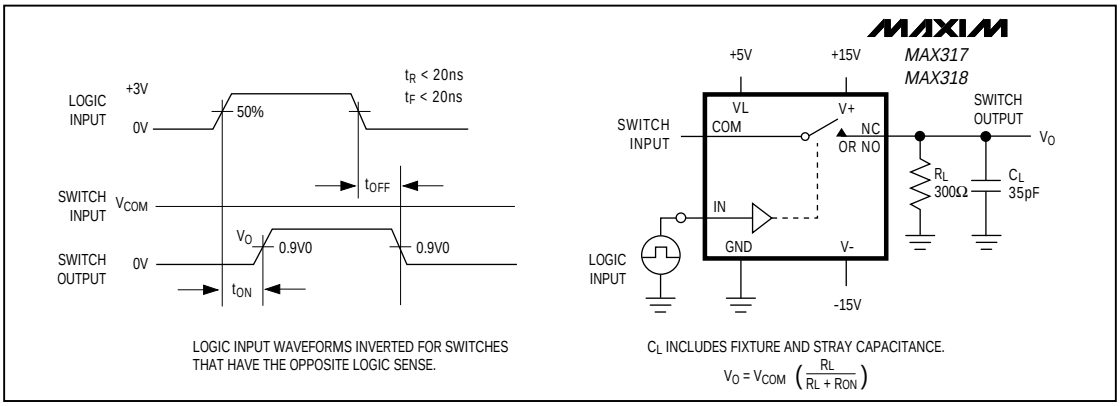

Figure 2. MAX317/MAX318 Switching-Time Test Circuit

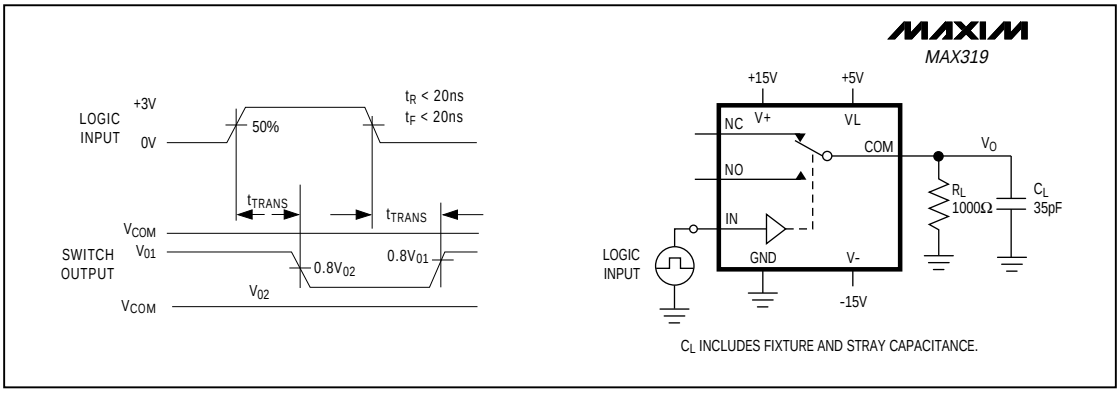

Figure 3. MAX319 Transition Time

Test Circuits/Timing Diagrams (continued)

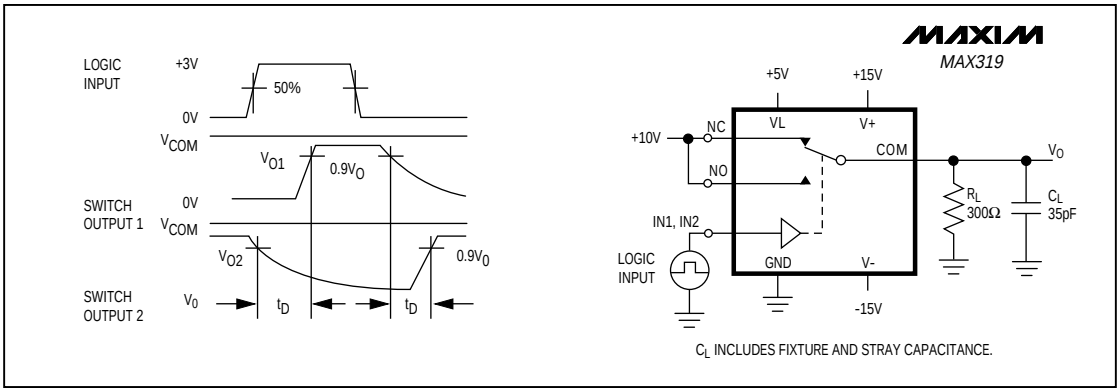

Figure 4. MAX319 Break-Before-Make Test Circuit

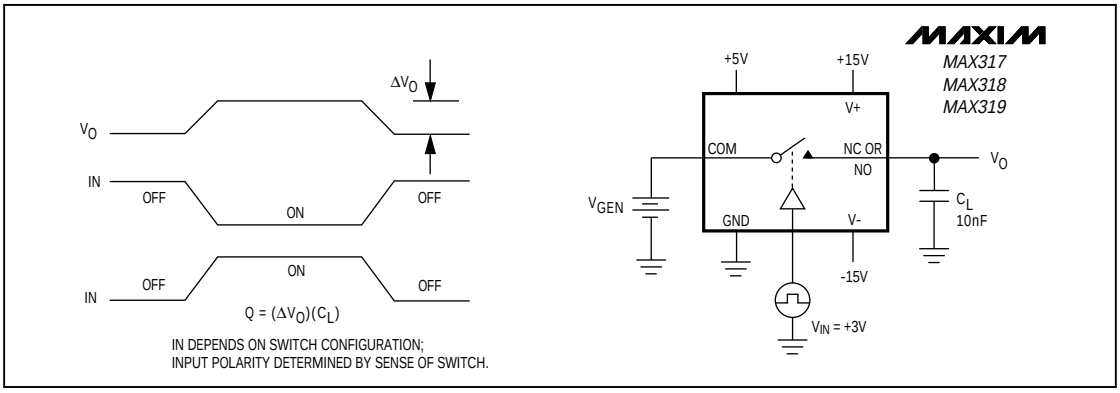

Figure 5. Charge-Injection Test Circuit

Test Circuits/Timing Diagrams (continued)

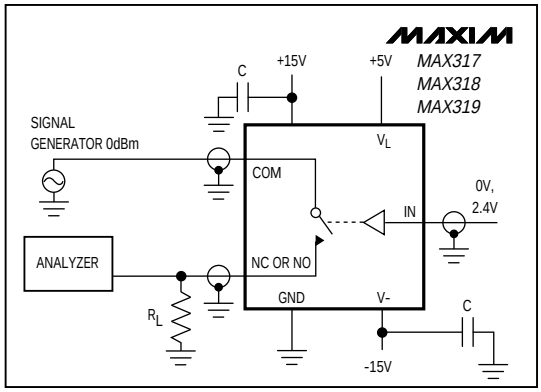

Figure 6. Off-Isolation Test Circuit

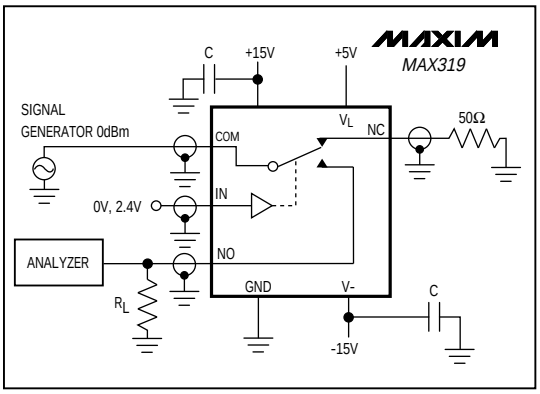

Figure 7. MAX319 Crosstalk Test Circuit

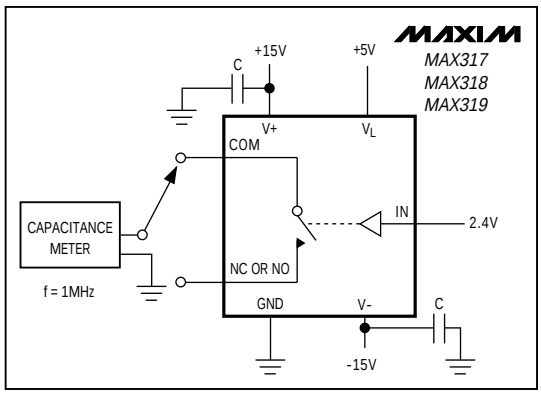

Figure 8. Channel-Off Capacitance Test Circuit

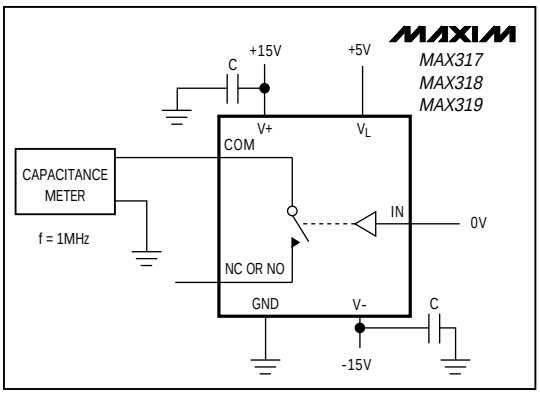

Figure 9. Channel-On Capacitance Test Circuit

Precision, CMOS Analog Switches

Ordering Information (continued)

PART	TEMP. RANGE	PIN-PACKAGE
MAX318CPA	0°C to +70°C	8 Plastic DIP
MAX318CSA	0°C to +70°C	8 SO
MAX318CJA	0°C to +70°C	8 CERDIP
MAX318C/D	0°C to +70°C	Dice*
MAX318EPA	-40°C to +85°C	8 Plastic DIP
MAX318ESA	-40°C to +85°C	8 SO
MAX318 EJA	-40°C to +85°C	8 CERDIP
MAX318MJA	-55°C to +125°C	8 CERDIP**
MAX319CPA	0°C to +70°C	8 Plastic DIP
MAX319CSA	0°C to +70°C	8 SO
MAX319CJA	0°C to +70°C	8 CERDIP
MAX319C/D	0°C to +70°C	Dice*
MAX319EPA	-40°C to +85°C	8 Plastic DIP
MAX319ESA	-40°C to +85°C	8 SO
MAX319EJA	-40°C to +85°C	8 CERDIP
MAX319MJA	-55°C to +125°C	8 CERDIP**

** Contact factory for dice specifications.*
*** Contact factory for availability and processing to MIL-STD-883.*

Chip Topography

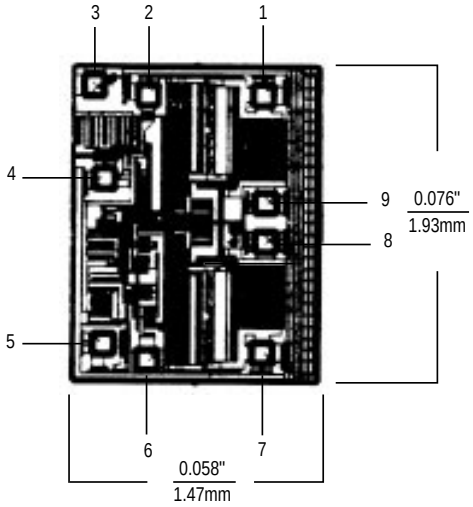

TRANSISTOR COUNT: 32;
SUBSTRATE CONNECTED TO V+.

DIE PAD	MAX317	MAX318	MAX319
1	COM	NC	NC
2	GND	GND	GND
3	V+	V+	V+
4	VL	VL	VL
5	IN	IN	IN
6	V-	V-	V-
7	N.C.	NO	NO
8	N.C.	COM	COM
9	NC	NC	COM

Package Information

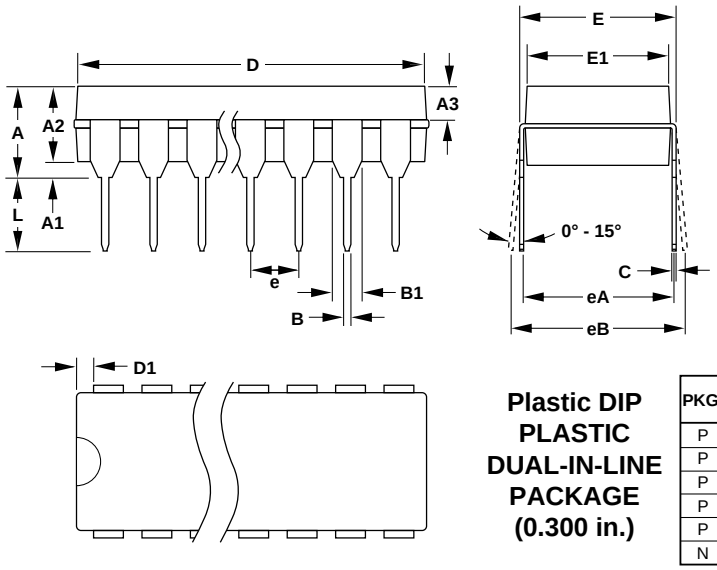

DIM	INCHES		MILLIMETERS	
	MIN	MAX	MIN	MAX
A	–	0.200	–	5.08
A1	0.015	–	0.38	–
A2	0.125	0.175	3.18	4.45
A3	0.055	0.080	1.40	2.03
B	0.016	0.022	0.41	0.56
B1	0.045	0.065	1.14	1.65
C	0.008	0.012	0.20	0.30
D1	0.005	0.080	0.13	2.03
E	0.300	0.325	7.62	8.26
E1	0.240	0.310	6.10	7.87
e	0.100	–	2.54	–
eA	0.300	–	7.62	–
eB	–	0.400	–	10.16
L	0.115	0.150	2.92	3.81

Plastic DIP PLASTIC DUAL-IN-LINE PACKAGE (0.300 in.)

PKG.	DIM	PINS	INCHES		MILLIMETERS	
			MIN	MAX	MIN	MAX
P	D	8	0.348	0.390	8.84	9.91
P	D	14	0.735	0.765	18.67	19.43
P	D	16	0.745	0.765	18.92	19.43
P	D	18	0.885	0.915	22.48	23.24
P	D	20	1.015	1.045	25.78	26.54
N	D	24	1.14	1.265	28.96	32.13

21-0043A

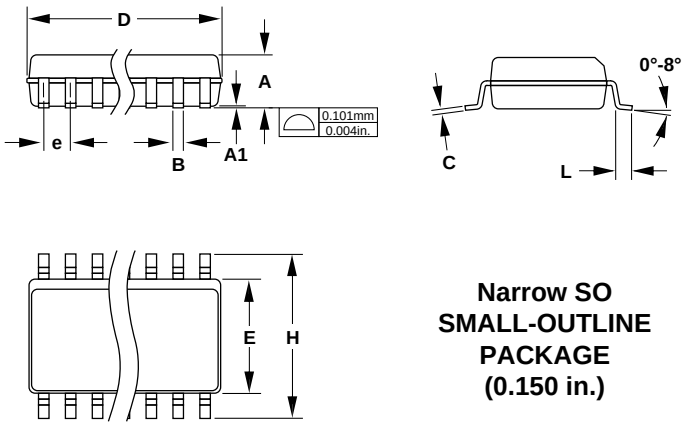

DIM	INCHES		MILLIMETERS	
	MIN	MAX	MIN	MAX
A	0.053	0.069	1.35	1.75
A1	0.004	0.010	0.10	0.25
B	0.014	0.019	0.35	0.49
C	0.007	0.010	0.19	0.25
E	0.150	0.157	3.80	4.00
e	0.050		1.27	
H	0.228	0.244	5.80	6.20
L	0.016	0.050	0.40	1.27

Narrow SO SMALL-OUTLINE PACKAGE (0.150 in.)

DIM	PINS	INCHES		MILLIMETERS	
		MIN	MAX	MIN	MAX
D	8	0.189	0.197	4.80	5.00
D	14	0.337	0.344	8.55	8.75
D	16	0.386	0.394	9.80	10.00

21-0041A

Package Information

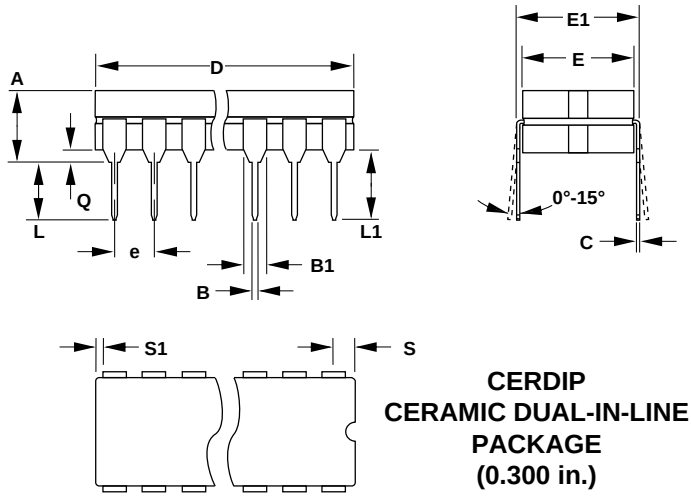

CERDIP
CERAMIC DUAL-IN-LINE
PACKAGE
(0.300 in.)

DIM	INCHES		MILLIMETERS	
	MIN	MAX	MIN	MAX
A	–	0.200	–	5.08
B	0.014	0.023	0.36	0.58
B1	0.038	0.065	0.97	1.65
C	0.008	0.015	0.20	0.38
E	0.220	0.310	5.59	7.87
E1	0.290	0.320	7.37	8.13
e	0.100		2.54	
L	0.125	0.200	3.18	5.08
L1	0.150	–	3.81	–
Q	0.015	0.070	0.38	1.78
S	–	0.098	–	2.49
S1	0.005	–	0.13	–

DIM	PINS	INCHES		MILLIMETERS	
		MIN	MAX	MIN	MAX
D	8	–	0.405	–	10.29
D	14	–	0.785	–	19.94
D	16	–	0.840	–	21.34
D	18	–	0.960	–	24.38
D	20	–	1.060	–	26.92
D	24	–	1.280	–	32.51

21-0045A

Maxim cannot assume responsibility for use of any circuitry other than circuitry entirely embodied in a Maxim product. No circuit patent licenses are implied. Maxim reserves the right to change the circuitry and specifications without notice at any time.

© 1994 Maxim Integrated Products Printed USA MAXIM is a registered trademark of Maxim Integrated Products.