THIS DRAWING IS UNPUBLISHED. RELEASED FOR PUBLICATION -,- .
© COPYRIGHT - By - ALL RIGHTS RESERVED.

LOC	DIST
—	—

REVISIONS

P	LTR	DESCRIPTION	DATE	DWN	APVD
	A2	REVISED PER ECR-12-007832	30APR12	HMR	PD

1 CONTINUOUS STRIP ON REELS.

2 WIRE SIZE #20-#16 AWG

3 INSULATION RANGE 2.29-3.30 [.090-.130] DIA

4 MATING TAB THK 0.51±0.025 [.020±.001]

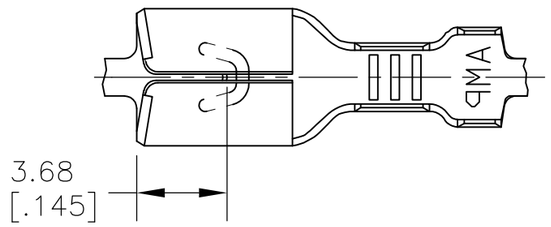

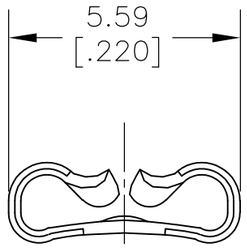

VIEW C-C
SCALE 8:1

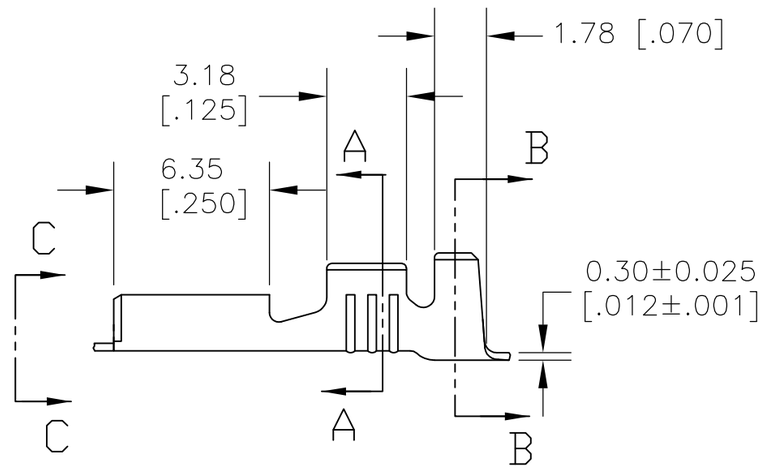

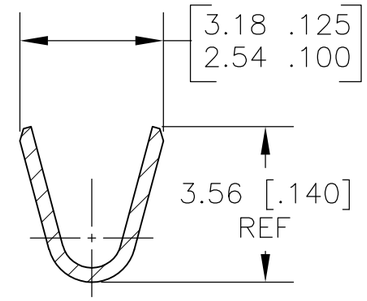

SECTION A-A
SCALE 8:1

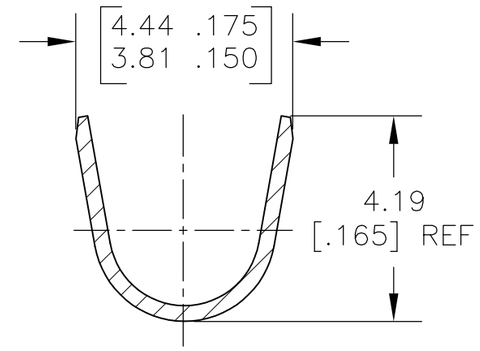

SECTION B-B
SCALE 8:1

1742841-1

PART NO

THIS DRAWING IS A CONTROLLED DOCUMENT.

DIMENSIONS: MM [INCHES]

TOLERANCES UNLESS OTHERWISE SPECIFIED:

0 PLC	± -
1 PLC	± -
2 PLC	± 0.25 [.010]
3 PLC	± -
4 PLC	± -
ANGLES	± 5°

MATERIAL: CR STEEL

FINISH: NICKEL PLATE

DWN	jr ruth	24AUG10
CHK	PETE DESANTIS	24AUG10
APVD	PETE DESANTIS	24AUG10
PRODUCT SPEC	—	
APPLICATION SPEC	—	
WEIGHT	—	

TE Connectivity

NAME: RECEPTACLE , FASTON, .187 SERIES —

SIZE	CAGE CODE	DRAWING NO	RESTRICTED TO
A3	00779	C-1742841	—

CUSTOMER DRAWING

SCALE	SHEET	REV
4:1	1 OF 1	A2