# AS85049/11 and MS3437B
# Straight Environmental Backshell

Glenair®



| CONNECTOR DESIGNATOR: | |
|---|---|
| **A** | AS50151 Series AS34001<br>MIL-DTL-26482 Series II<br>AS81703 Series III<br>MIL-DTL-83723 Series I & III<br>40M39569, DEF 5326-3, EN 2997<br>EN 3646, ESC 10, ESC 11, LN 29504<br>NFC93422 Series HE302<br>PAN 6432-1, PAN 6432-2, PATT 602 |

**Basic Part Number** — **Dash Number** *(Table II)*

**M85049/11 - 21 N**

**Finish / Material**

*B = Black Cadmium / Stainless Steel*
*N = Electroless Nickel / Aluminum*
*S = Passivated / Stainless Steel*
*W = 1,000 Hr. Cadmium Olive Drab over Electroless Nickel / Aluminum*
*X = Nickel Fluorocarbon Polymer / Aluminum*
*Y = Pure Dense Electrodeposited Aluminum / Aluminum*
*Z = Zinc Nickel, Black / Aluminum*
*XS = Nickel Fluorocarbon Polymer / Stainless Steel*
*YS = Pure Dense Electrodeposited Aluminum / Stainless Steel*
*ZS = Zinc Nickel, Black / Stainless Steel*

**Superseded Part Number**

**MS3437B 21 N**

Basic Part No. — Dash No.

**Finish**
**(Material is Aluminum Only)**

A = Cadmium Olive Drab over Nickel
C = Cadmium Olive Drab
N = Electroless Nickel

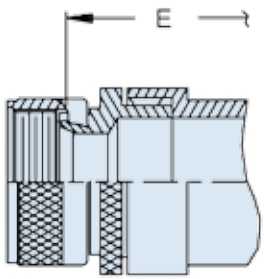


STYLE 2

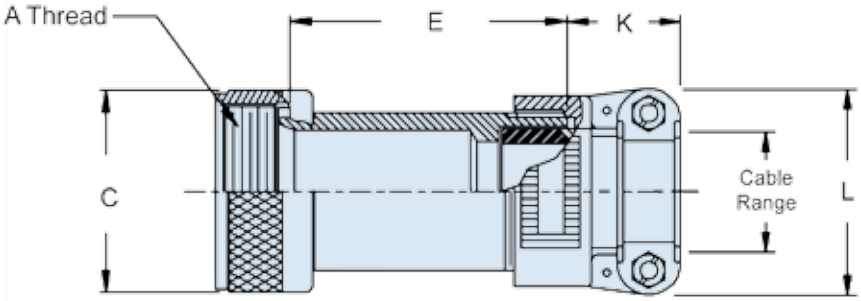


STYLE 1

**TABLE I: Shell Size and Dimensions**

| Shell Size | A Thread Class 2B-LH | C Dia Max |
|---|---|---|
| 3 | .562 - 24 UNEF | .669 (17.0) |
| 8 | .500 - 20 UNF | .617 (15.7) |
| 10 | .625 - 24 UNEF | .734 (18.6) |
| 12 | .750 - 20 UNEF | .858 (21.8) |
| 14 | .875 - 20 UNEF | .984 (25.0) |
| 16 | 1.000 - 20 UNEF | 1.112 (28.2) |
| 18 | 1.062 - 18 UNEF | 1.218 (30.9) |
| 20 | 1.188 - 18 UNEF | 1.345 (34.2) |
| 22 | 1.313 - 18 UNEF | 1.468 (37.3) |
| 24 | 1.438 - 18 UNEF | 1.593 (40.5) |
| 28 | 1.750 - 18 UNS | 1.969 (50.0) |
| 32 | 2.000 - 18 UNS | 2.219 (56.4) |
| 36 | 2.250 - 16 UN | 2.469 (62.7) |
| 40 | 2.500 - 16 UN | 2.719 (69.1) |
| 44 | 2.750 - 16 UN | 2.969 (75.4) |
| 48 | 3.000 - 16 UN | 3.219 (81.8) |
| 61 | 1.500 - 18 UNEF | 1.653 (42.0) |

**APPLICATION NOTES**

1. For complete dimensions see the applicable Military Specification.
2. Metric dimensions (mm) are in parentheses.
3. When maximum cable entry is exceeded, Style 2 will be supplied.
4. Cable Range is defined as the accommodation range for the wire bundle or cable. Dimensions shown are not intended for inspection criteria.

Dimensions in inches (millimeters) and are subject to change without notice.

© 2013 Glenair, Inc. U.S. CAGE Code 06324 Printed in U.S.A.

# AS85049/11 and MS3437B
# Straight Environmental Backshell



| TABLE II: Dash Number and Cable Range (Continued on Page B-33) | | | | | | | | |
|---|---|---|---|---|---|---|---|---|
| Dash No. | Shell Size | Style | E Max | K Ref. | L Max | Cable Range Min | Cable Range Max | M85049/42 Ref. |
| 01 | 3 | 1 | 2.125 (54.0) | 1.027 (26.1) | .957 (24.3) | .125 (3.2) | .250 (6.4) | 4 |
| 02 | 3 | 1 | 3.125 (79.4) | 1.027 (26.1) | .957 (24.3) | .125 (3.2) | .250 (6.4) | 4 |
| 03 | 3 | 2 | 2.875 (73.0) | 1.027 (26.1) | 1.145 (29.1) | .250 (6.4) | .437 (11.1) | 6 |
| 04 | 3 | 2 | 3.875 (98.4) | 1.027 (26.1) | 1.145 (29.1) | .250 (6.4) | .437 (11.1) | 6 |
| 05 | 8 | 1 | 2.125 (54.0) | 1.027 (26.1) | .957 (24.3) | .125 (3.2) | .250 (6.4) | 4 |
| 06 | 8 | 1 | 3.125 (79.4) | 1.027 (26.1) | .957 (24.3) | .125 (3.2) | .250 (6.4) | 4 |
| 07 | 8 | 2 | 2.875 (73.0) | 1.027 (26.1) | 1.145 (29.1) | .250 (6.4) | .437 (11.1) | 6 |
| 08 | 8 | 2 | 3.875 (98.4) | 1.027 (26.1) | 1.145 (29.1) | .250 (6.4) | .437 (11.1) | 6 |
| 09 | 10 | 1 | 2.125 (54.0) | 1.027 (26.1) | .957 (24.3) | .125 (3.2) | .312 (7.9) | 4 |
| 10 | 10 | 1 | 3.125 (79.4) | 1.027 (26.1) | .957 (24.3) | .125 (3.2) | .312 (7.9) | 4 |
| 11 | 10 | 2 | 2.875 (73.0) | 1.027 (26.1) | 1.145 (29.1) | .250 (6.4) | .437 (11.1) | 6 |
| 12 | 10 | 2 | 3.875 (98.4) | 1.027 (26.1) | 1.145 (29.1) | .250 (6.4) | .437 (11.1) | 6 |
| 13 | 12 | 1 | 2.125 (54.0) | 1.027 (26.1) | 1.145 (29.1) | .250 (6.4) | .437 (11.1) | 6 |
| 14 | 12 | 1 | 3.125 (79.4) | 1.027 (26.1) | 1.145 (29.1) | .250 (6.4) | .437 (11.1) | 6 |
| 15 | 12 | 2 | 2.875 (73.0) | 1.027 (26.1) | 1.332 (33.8) | .350 (8.9) | .625 (15.9) | 10 |
| 16 | 12 | 2 | 3.875 (98.4) | 1.027 (26.1) | 1.332 (33.8) | .350 (8.9) | .625 (15.9) | 10 |
| 17 | 14 | 1 | 2.125 (54.0) | 1.027 (26.1) | 1.332 (33.8) | .350 (8.9) | .575 (14.6) | 10 |
| 18 | 14 | 1 | 3.125 (79.4) | 1.027 (26.1) | 1.332 (33.8) | .350 (8.9) | .575 (14.6) | 10 |
| 19 | 14 | 2 | 2.875 (73.0) | 1.059 (26.9) | 1.551 (39.4) | .500 (12.7) | .750 (19.1) | 12 |
| 20 | 14 | 2 | 3.875 (98.4) | 1.059 (26.9) | 1.551 (39.4) | .500 (12.7) | .750 (19.1) | 12 |
| 21 | 16 | 1 | 2.125 (54.0) | 1.059 (26.9) | 1.551 (39.4) | .500 (12.7) | .700 (17.8) | 12 |
| 22 | 16 | 1 | 3.125 (79.4) | 1.059 (26.9) | 1.551 (39.4) | .500 (12.7) | .700 (17.8) | 12 |
| 23 | 16 | 2 | 2.875 (73.0) | 1.156 (29.4) | 1.770 (45.0) | .625 (15.9) | .937 (23.8) | 16 |
| 24 | 16 | 2 | 3.875 (98.4) | 1.156 (29.4) | 1.770 (45.0) | .625 (15.9) | .937 (23.8) | 16 |
| 25 | 18 | 1 | 2.125 (54.0) | 1.027 (26.1) | 1.332 (33.8) | .350 (8.9) | .625 (15.9) | 10 |
| 26 | 18 | 1 | 3.125 (79.4) | 1.027 (26.1) | 1.332 (33.8) | .350 (8.9) | .625 (15.9) | 10 |
| 27 | 18 | 1 | 2.125 (54.0) | 1.059 (26.9) | 1.551 (39.4) | .500 (12.7) | .750 (19.1) | 12 |
| 28 | 18 | 1 | 3.125 (79.4) | 1.059 (26.9) | 1.551 (39.4) | .500 (12.7) | .750 (19.1) | 12 |
| 29 | 18 | 2 | 2.875 (73.0) | 1.156 (29.4) | 1.770 (45.0) | .625 (15.9) | .937 (23.8) | 16 |
| 30 | 18 | 2 | 3.875 (98.4) | 1.156 (29.4) | 1.770 (45.0) | .625 (15.9) | .937 (23.8) | 16 |
| 31 | 20 | 1 | 3.125 (79.4) | 1.027 (26.1) | 1.332 (33.8) | .350 (8.9) | .625 (15.9) | 10 |
| 32 | 20 | 1 | 4.125 (104.8) | 1.027 (26.1) | 1.332 (33.8) | .350 (8.9) | .625 (15.9) | 10 |
| 33 | 20 | 1 | 3.125 (79.4) | 1.059 (26.9) | 1.551 (39.4) | .500 (12.7) | .750 (19.1) | 12 |
| 34 | 20 | 1 | 4.125 (104.8) | 1.059 (26.9) | 1.551 (39.4) | .500 (12.7) | .750 (19.1) | 12 |
| 35 | 20 | 2 | 3.875 (98.4) | 1.156 (29.4) | 1.770 (45.0) | .625 (15.9) | .937 (23.8) | 16 |
| 36 | 20 | 2 | 4.875 (123.8) | 1.156 (29.4) | 1.770 (45.0) | .625 (15.9) | .937 (23.8) | 16 |
| 37 | 20 | 2 | 3.875 (98.4) | 1.375 (34.9) | 2.113 (53.7) | .875 (22.2) | 1.250 (31.8) | 20 |
| 38 | 20 | 2 | 4.875 (123.8) | 1.375 (34.9) | 2.113 (53.7) | .875 (22.2) | 1.250 (31.8) | 20 |
| 39 | 22 | 1 | 3.125 (79.4) | 1.027 (26.1) | 1.332 (33.8) | .350 (8.9) | .625 (15.9) | 10 |
| 40 | 22 | 1 | 4.125 (104.8) | 1.027 (26.1) | 1.332 (33.8) | .350 (8.9) | .625 (15.9) | 10 |
| 41 | 22 | 1 | 3.125 (79.4) | 1.059 (26.9) | 1.551 (39.4) | .500 (12.7) | .750 (19.1) | 12 |
| 42 | 22 | 1 | 4.125 (104.8) | 1.059 (26.9) | 1.551 (39.4) | .500 (12.7) | .750 (19.1) | 12 |
| 43 | 22 | 1 | 3.125 (79.4) | 1.156 (29.4) | 1.770 (45.0) | .625 (15.9) | .937 (23.8) | 16 |
| 44 | 22 | 1 | 4.125 (104.8) | 1.156 (29.4) | 1.770 (45.0) | .625 (15.9) | .937 (23.8) | 16 |
| 45 | 22 | 2 | 3.875 (98.4) | 1.375 (34.9) | 2.113 (53.7) | .875 (22.2) | 1.250 (31.8) | 20 |
| 46 | 22 | 2 | 4.875 (123.8) | 1.375 (34.9) | 2.113 (53.7) | .875 (22.2) | 1.250 (31.8) | 20 |
| 47 | 24 | 1 | 3.125 (79.4) | 1.059 (26.9) | 1.551 (39.4) | .500 (12.7) | .750 (19.1) | 12 |
| 48 | 24 | 1 | 4.125 (104.8) | 1.059 (26.9) | 1.551 (39.4) | .500 (12.7) | .750 (19.1) | 12 |
| 49 | 24 | 1 | 3.125 (79.4) | 1.156 (29.4) | 1.770 (45.0) | .625 (15.9) | .812 (20.6) | 16 |
| 50 | 24 | 1 | 4.125 (104.8) | 1.156 (29.4) | 1.770 (45.0) | .625 (15.9) | .812 (20.6) | 16 |
| 51 | 24 | 1 | 3.125 (79.4) | 1.156 (29.4) | 1.770 (45.0) | .625 (15.9) | .937 (23.8) | 16 |
| 52 | 24 | 1 | 4.125 (104.8) | 1.156 (29.4) | 1.770 (45.0) | .625 (15.9) | .937 (23.8) | 16 |

**Continued on Page B-33**

Dimensions in inches (millimeters) and are subject to change without notice.

© 2013 Glenair, Inc.

U.S. CAGE Code 06324

Printed in U.S.A.

| TABLE II: Dash Number and Cable Range (Continued From Page B-32) | | | | | | | | |
|---|---|---|---|---|---|---|---|---|
| Dash No. | Shell Size | Style | E Max | K Ref. | L Max | Cable Range Min | Cable Range Max | M85049/42 Ref. |
| 53 | 24 | 2 | 3.875 (98.4) | 1.375 (34.9) | 2.113 (53.7) | .875 (22.2) | 1.250 (31.8) | 20 |
| 54 | 24 | 2 | 4.875 (123.8) | 1.375 (34.9) | 2.113 (53.7) | .875 (22.2) | 1.250 (31.8) | 20 |
| 55 | 28 | 1 | 3.125 (79.4) | 1.059 (26.9) | 1.551 (39.4) | .500 (12.7) | .750 (19.1) | 12 |
| 56 | 28 | 1 | 4.125 (104.8) | 1.059 (26.9) | 1.551 (39.4) | .500 (12.7) | .750 (19.1) | 12 |
| 57 | 28 | 1 | 3.125 (79.4) | 1.156 (29.4) | 1.770 (45.0) | .625 (15.9) | .937 (23.8) | 16 |
| 58 | 28 | 1 | 4.125 (104.8) | 1.156 (29.4) | 1.770 (45.0) | .625 (15.9) | .937 (23.8) | 16 |
| 59 | 28 | 1 | 3.125 (79.4) | 1.375 (34.9) | 2.113 (53.7) | .875 (22.2) | 1.250 (31.8) | 20 |
| 60 | 28 | 1 | 4.125 (104.8) | 1.375 (34.9) | 2.113 (53.7) | .875 (22.2) | 1.250 (31.8) | 20 |
| 61 | 28 | 1 | 3.125 (79.4) | 1.500 (38.1) | 2.363 (60.0) | 1.000 (25.4) | 1.375 (34.9) | 24 |
| 62 | 28 | 1 | 4.125 (104.8) | 1.500 (38.1) | 2.363 (60.0) | 1.000 (25.4) | 1.375 (34.9) | 24 |
| 63 | 32 | 1 | 3.125 (79.4) | 1.156 (29.4) | 1.770 (45.0) | .625 (15.9) | .937 (23.8) | 16 |
| 64 | 32 | 1 | 4.125 (104.8) | 1.156 (29.4) | 1.770 (45.0) | .625 (15.9) | .937 (23.8) | 16 |
| 65 | 32 | 1 | 3.125 (79.4) | 1.375 (34.9) | 2.113 (53.7) | .875 (22.2) | 1.250 (31.8) | 20 |
| 66 | 32 | 1 | 4.125 (104.8) | 1.375 (34.9) | 2.113 (53.7) | .875 (22.2) | 1.250 (31.8) | 20 |
| 67 | 32 | 1 | 3.125 (79.4) | 1.500 (38.1) | 2.363 (60.0) | 1.000 (25.4) | 1.375 (34.9) | 24 |
| 68 | 32 | 1 | 4.125 (104.8) | 1.500 (38.1) | 2.363 (60.0) | 1.000 (25.4) | 1.375 (34.9) | 24 |
| 69 | 32 | 1 | 3.125 (79.4) | 1.781 (45.2) | 2.770 (70.4) | 1.250 (31.8) | 1.625 (41.3) | 28 |
| 70 | 32 | 1 | 4.125 (104.8) | 1.781 (45.2) | 2.770 (70.4) | 1.250 (31.8) | 1.625 (41.3) | 28 |
| 71 | 36 | 1 | 4.125 (104.8) | 1.375 (34.9) | 2.113 (53.7) | .875 (22.2) | 1.250 (31.8) | 20 |
| 72 | 36 | 1 | 5.125 (130.2) | 1.375 (34.9) | 2.113 (53.7) | .875 (22.2) | 1.250 (31.8) | 20 |
| 73 | 36 | 1 | 4.125 (104.8) | 1.500 (38.1) | 2.363 (60.0) | 1.000 (25.4) | 1.375 (34.9) | 24 |
| 74 | 36 | 1 | 5.125 (130.2) | 1.500 (38.1) | 2.363 (60.0) | 1.000 (25.4) | 1.375 (34.9) | 24 |
| 75 | 36 | 1 | 4.125 (104.8) | 1.781 (45.2) | 2.770 (70.4) | 1.250 (31.8) | 1.625 (41.3) | 28 |
| 76 | 36 | 1 | 5.125 (130.2) | 1.781 (45.2) | 2.770 (70.4) | 1.250 (31.8) | 1.625 (41.3) | 28 |
| 77 | 36 | 2 | 5.000 (127.0) | 1.830 (46.5) | 3.020 (76.7) | 1.437 (36.5) | 1.875 (47.6) | 32 |
| 78 | 36 | 2 | 6.000 (152.4) | 1.830 (46.5) | 3.020 (76.7) | 1.437 (36.5) | 1.875 (47.6) | 32 |
| 79 | 40 | 1 | 4.125 (104.8) | 1.375 (34.9) | 2.113 (53.7) | .875 (22.2) | 1.250 (31.8) | 20 |
| 80 | 40 | 1 | 5.125 (130.2) | 1.375 (34.9) | 2.113 (53.7) | .875 (22.2) | 1.250 (31.8) | 20 |
| 81 | 40 | 1 | 4.125 (104.8) | 1.500 (38.1) | 2.363 (60.0) | 1.000 (25.4) | 1.375 (34.9) | 24 |
| 82 | 40 | 1 | 5.125 (130.2) | 1.500 (38.1) | 2.363 (60.0) | 1.000 (25.4) | 1.375 (34.9) | 24 |
| 83 | 40 | 1 | 4.125 (104.8) | 1.781 (45.2) | 2.770 (70.4) | 1.250 (31.8) | 1.625 (41.3) | 28 |
| 84 | 40 | 1 | 5.125 (130.2) | 1.781 (45.2) | 2.770 (70.4) | 1.250 (31.8) | 1.625 (41.3) | 28 |
| 85 | 40 | 1 | 4.125 (104.8) | 1.830 (46.5) | 3.020 (76.7) | 1.437 (36.5) | 1.875 (47.6) | 32 |
| 86 | 40 | 1 | 5.125 (130.2) | 1.830 (46.5) | 3.020 (76.7) | 1.437 (36.5) | 1.875 (47.6) | 32 |
| 87 | 44 | 1 | 4.125 (104.8) | 1.375 (34.9) | 2.113 (53.7) | .875 (22.2) | 1.250 (31.8) | 20 |
| 88 | 44 | 1 | 5.125 (130.2) | 1.375 (34.9) | 2.113 (53.7) | .875 (22.2) | 1.250 (31.8) | 20 |
| 89 | 44 | 1 | 4.125 (104.8) | 1.500 (38.1) | 2.363 (60.0) | 1.000 (25.4) | 1.375 (34.9) | 24 |
| 90 | 44 | 1 | 5.125 (130.2) | 1.500 (38.1) | 2.363 (60.0) | 1.000 (25.4) | 1.375 (34.9) | 24 |
| 91 | 44 | 1 | 4.125 (104.8) | 1.781 (45.2) | 2.770 (70.4) | 1.250 (31.8) | 1.625 (41.3) | 28 |
| 92 | 44 | 1 | 5.125 (130.2) | 1.781 (45.2) | 2.770 (70.4) | 1.250 (31.8) | 1.625 (41.3) | 28 |
| 93 | 44 | 1 | 4.125 (104.8) | 1.830 (46.5) | 3.020 (76.7) | 1.437 (36.5) | 1.875 (47.6) | 32 |
| 94 | 44 | 1 | 5.125 (130.2) | 1.830 (46.5) | 3.020 (76.7) | 1.437 (36.5) | 1.875 (47.6) | 32 |
| 95 | 48 | 1 | 4.125 (104.8) | 1.375 (34.9) | 2.113 (53.7) | .875 (22.2) | 1.250 (31.8) | 20 |
| 96 | 48 | 1 | 5.125 (130.2) | 1.375 (34.9) | 2.113 (53.7) | .875 (22.2) | 1.250 (31.8) | 20 |
| 97 | 48 | 1 | 4.125 (104.8) | 1.500 (38.1) | 2.363 (60.0) | 1.000 (25.4) | 1.375 (34.9) | 24 |
| 98 | 48 | 1 | 5.125 (130.2) | 1.500 (38.1) | 2.363 (60.0) | 1.000 (25.4) | 1.375 (34.9) | 24 |
| 99 | 48 | 1 | 4.125 (104.8) | 1.781 (45.2) | 2.770 (70.4) | 1.250 (31.8) | 1.625 (41.3) | 28 |
| 100 | 48 | 1 | 5.125 (130.2) | 1.781 (45.2) | 2.770 (70.4) | 1.250 (31.8) | 1.625 (41.3) | 28 |
| 101 | 48 | 1 | 4.125 (104.8) | 1.830 (46.5) | 3.020 (76.7) | 1.437 (36.5) | 1.875 (47.6) | 32 |
| 102 | 48 | 1 | 5.125 (130.2) | 1.830 (46.5) | 3.020 (76.7) | 1.437 (36.5) | 1.875 (47.6) | 32 |
| 103 | 61 | 1 | 3.125 (79.4) | 1.059 (26.9) | 1.551 (39.4) | .500 (12.7) | .750 (19.1) | 12 |
| 104 | 61 | 1 | 4.125 (104.8) | 1.059 (26.9) | 1.551 (39.4) | .500 (12.7) | .750 (19.1) | 12 |

**Continued on Page B-34**

Dimensions in inches (millimeters) and are subject to change without notice.

© 2013 Glenair, Inc.
U.S. CAGE Code 06324
Printed in U.S.A.

# AS85049/11 and MS3437B
# Straight Environmental Backshell



**TABLE II: Dash Number and Cable Range (Continued From Page B-33)**

| Dash No. | Shell Size | Style | E Max | K Ref. | L Max | Cable Range Min | Cable Range Max | M85049/42 Ref. |
|---|---|---|---|---|---|---|---|---|
| 105 | 61 | 1 | 3.125 (79.4) | 1.156 (29.4) | 1.770 (45.0) | .625 (15.9) | .937 (23.8) | 16 |
| 106 | 61 | 1 | 4.125 (104.8) | 1.156 (29.4) | 1.770 (45.0) | .625 (15.9) | .937 (23.8) | 16 |
| 107 | 61 | 2 | 3.875 (98.4) | 1.375 (34.9) | 2.113 (53.7) | .875 (22.2) | 1.250 (31.8) | 20 |
| 108 | 61 | 2 | 4.875 (123.8) | 1.375 (34.9) | 2.113 (53.7) | .875 (22.2) | 1.250 (31.8) | 20 |
| 109 | 61 | 2 | 3.875 (98.4) | 1.500 (38.1) | 2.363 (60.0) | 1.000 (25.4) | 1.375 (34.9) | 24 |
| 110 | 61 | 2 | 4.875 (123.8) | 1.500 (38.1) | 2.363 (60.0) | 1.000 (25.4) | 1.375 (34.9) | 24 |
| 111 | 12 | 1 | 2.125 (54.0) | 1.027 (26.1) | 1.332 (33.8) | .350 (8.9) | .500 (12.7) | 10 |
| 112 | 16 | 1 | 2.125 (54.0) | 1.027 (26.1) | 1.145 (29.1) | .250 (6.4) | .437 (11.1) | 6 |
| 113 | 16 | 1 | 3.125 (79.4) | 1.027 (26.1) | 1.145 (29.1) | .250 (6.4) | .437 (11.1) | 6 |
| 114 | 12 | 1 | 2.125 (54.0) | 1.027 (26.1) | .957 (24.3) | .125 (3.2) | .312 (7.9) | 4 |
| 115 | 12 | 1 | 3.125 (79.4) | 1.027 (26.1) | .957 (24.3) | .125 (3.2) | .312 (7.9) | 4 |
| 116 | 14 | 1 | 2.125 (54.0) | 1.027 (26.1) | 1.145 (29.1) | .250 (6.4) | .437 (11.1) | 6 |
| 117 | 14 | 1 | 3.125 (79.4) | 1.027 (26.1) | 1.145 (29.1) | .250 (6.4) | .437 (11.1) | 6 |
| 118 | 16 | 1 | 2.125 (54.0) | 1.027 (26.1) | 1.332 (33.8) | .350 (8.9) | .625 (15.9) | 10 |
| 119 | 16 | 1 | 3.125 (79.4) | 1.027 (26.1) | 1.332 (33.8) | .350 (8.9) | .625 (15.9) | 10 |
| 120 | 18 | 1 | 2.125 (54.0) | 1.027 (26.1) | .957 (24.3) | .125 (3.2) | .312 (7.9) | 4 |
| 121 | 18 | 1 | 3.125 (79.4) | 1.027 (26.1) | .957 (24.3) | .125 (3.2) | .312 (7.9) | 4 |
| 122 | 18 | 1 | 2.125 (54.0) | 1.027 (26.1) | 1.145 (29.1) | .250 (6.4) | .437 (11.1) | 6 |
| 123 | 18 | 1 | 3.125 (79.4) | 1.027 (26.1) | 1.145 (29.1) | .250 (6.4) | .437 (11.1) | 6 |
| 124 | 20 | 1 | 3.125 (79.4) | 1.027 (26.1) | 1.145 (29.1) | .250 (6.4) | .437 (11.1) | 6 |
| 125 | 20 | 1 | 4.125 (104.8) | 1.027 (26.1) | 1.145 (29.1) | .250 (6.4) | .437 (11.1) | 6 |
| 126 | 22 | 1 | 3.125 (79.4) | 1.027 (26.1) | .957 (24.3) | .125 (3.2) | .312 (7.9) | 4 |
| 127 | 22 | 1 | 4.125 (104.8) | 1.027 (26.1) | .957 (24.3) | .125 (3.2) | .312 (7.9) | 4 |
| 128 | 22 | 1 | 3.125 (79.4) | 1.027 (26.1) | 1.145 (29.1) | .250 (6.4) | .437 (11.1) | 6 |
| 129 | 22 | 1 | 4.125 (104.8) | 1.027 (26.1) | 1.145 (29.1) | .250 (6.4) | .437 (11.1) | 6 |
| 130 | 24 | 1 | 3.125 (79.4) | 1.027 (26.1) | 1.332 (33.8) | .350 (8.9) | .625 (15.9) | 10 |
| 131 | 24 | 1 | 4.125 (104.8) | 1.027 (26.1) | 1.332 (33.8) | .350 (8.9) | .625 (15.9) | 10 |
| 132 | 36 | 1 | 4.125 (104.8) | 1.059 (26.9) | 1.551 (39.4) | .500 (12.7) | .750 (19.1) | 12 |
| 133 | 36 | 1 | 5.125 (130.2) | 1.059 (26.9) | 1.551 (39.4) | .500 (12.7) | .750 (19.1) | 12 |
| 134 | 40 | 1 | 4.125 (104.8) | 1.059 (26.9) | 1.551 (39.4) | .500 (12.7) | .750 (19.1) | 12 |
| 135 | 40 | 1 | 5.125 (130.2) | 1.059 (26.9) | 1.551 (39.4) | .500 (12.7) | .750 (19.1) | 12 |
| 136 | 10 | 1 | 2.125 (54.0) | 1.027 (26.1) | 1.145 (29.1) | .250 (6.4) | .375 (9.5) | 6 |
| 137 | 10 | 1 | 3.125 (79.4) | 1.027 (26.1) | 1.145 (29.1) | .250 (6.4) | .375 (9.5) | 6 |
| 138 | 12 | 1 | 2.125 (54.0) | 1.027 (26.1) | 1.332 (33.8) | .350 (8.9) | .500 (12.7) | 10 |
| 139 | 12 | 1 | 3.125 (79.4) | 1.027 (26.1) | 1.332 (33.8) | .350 (8.9) | .500 (12.7) | 10 |
| 140 | 20 | 1 | 3.125 (79.4) | 1.156 (29.4) | 1.770 (45.0) | .625 (15.9) | .904 (23.0) | 16 |
| 141 | 20 | 1 | 4.125 (104.8) | 1.156 (29.4) | 1.770 (45.0) | .625 (15.9) | .904 (23.0) | 16 |
| 142 | 22 | 1 | 3.125 (79.4) | 1.375 (34.9) | 2.113 (53.7) | .875 (22.2) | 1.029 (26.1) | 20 |
| 143 | 22 | 1 | 4.125 (104.8) | 1.375 (34.9) | 2.113 (53.7) | .875 (22.2) | 1.029 (26.1) | 20 |
| 144 | 24 | 1 | 3.125 (79.4) | 1.375 (34.9) | 2.113 (53.7) | .875 (22.2) | 1.144 (29.1) | 20 |
| 145 | 24 | 1 | 4.125 (104.8) | 1.375 (34.9) | 2.113 (53.7) | .875 (22.2) | 1.144 (29.1) | 20 |
| 146 | 36 | 1 | 4.125 (104.8) | 1.830 (46.5) | 3.020 (76.7) | 1.437 (36.5) | 1.840 (46.7) | 32 |
| 147 | 36 | 1 | 5.125 (130.2) | 1.830 (46.5) | 3.020 (76.7) | 1.437 (36.5) | 1.840 (46.7) | 32 |
| 148 | 38 | 1 | 4.125 (104.8) | 1.156 (29.4) | 1.770 (45.0) | .625 (15.9) | .937 (23.8) | 16 |
| 149 | 38 | 1 | 5.125 (130.2) | 1.156 (29.4) | 1.770 (45.0) | .625 (15.9) | .937 (23.8) | 16 |
| 150 | 14 | 1 | 2.125 (54.0) | 1.027 (26.1) | .957 (24.3) | .125 (3.2) | .312 (7.9) | 4 |
| 151 | 14 | 1 | 3.125 (79.4) | 1.027 (26.1) | .957 (24.3) | .125 (3.2) | .312 (7.9) | 4 |
| 152 | 16 | 1 | 2.125 (54.0) | 1.027 (26.1) | .957 (24.3) | .125 (3.2) | .312 (7.9) | 4 |
| 153 | 16 | 1 | 3.125 (79.4) | 1.027 (26.1) | .957 (24.3) | .125 (3.2) | .312 (7.9) | 4 |
| 154 | 44 | 1 | 4.125 (104.8) | 1.156 (29.4) | 1.770 (45.0) | .625 (15.9) | .937 (23.8) | 16 |
| 155 | 44 | 1 | 5.125 (130.2) | 1.156 (29.4) | 1.770 (45.0) | .625 (15.9) | .937 (23.8) | 16 |
| 156 | 40 | 1 | 4.125 (104.8) | 1.156 (29.4) | 1.770 (45.0) | .625 (15.9) | .937 (23.8) | 16 |
| 157 | 40 | 1 | 5.125 (130.2) | 1.156 (29.4) | 1.770 (45.0) | .625 (15.9) | .937 (23.8) | 16 |

Dimensions in inches (millimeters) and are subject to change without notice.

© 2013 Glenair, Inc.
U.S. CAGE Code 06324
Printed in U.S.A.