Si4x55-C

EASY-TO-USE, LOW-CURRENT OOK/(G)FSK SUB-GHZ TRANSCEIVER, TRANSMITTER, AND RECEIVER

Features

- Frequency range = 284–960 MHz
- Receive sensitivity = –116 dBm
- Modulation
  - (G)FSK
  - OOK
- Max output power = +13 dBm
- Low active power consumption
  - 10 mA RX
  - 18 mA TX @ +10 dBm
- Low standby current = 40 nA
- Low shutdown current = 30 nA
- Preamble sense mode
  - 6 mA average RX current at 1.2 kbps
- Max data rate = 500 kbps
- Power supply = 1.8 to 3.6 V
- TX and RX 64 byte FIFOs
- Automatic frequency control (AFC)
- Automatic gain control (AGC)
- Integrated battery voltage sensor
- Packet handling including preamble, sync word detection, and CRC
- Low BOM
- 20-Pin 3x3 mm QFN package

Pin Assignments

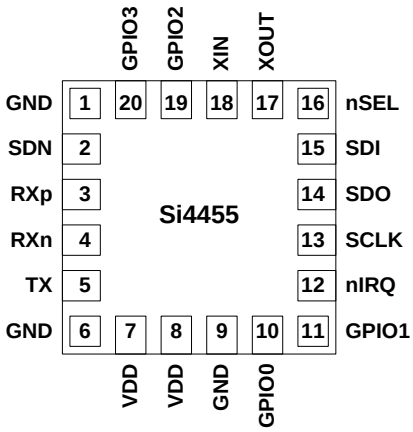

Patents pending

Applications

- Remote control
- Home security and alarm
- Telemetry
- Garage and gate openers
- Remote keyless entry
- Home automation
- Industrial control
- Sensor networks
- Health monitors

Description

Silicon Laboratories' Si4455 is an easy-to-use, low current, sub-GHz EZRadio® transceiver. The Si4055 is a transmit-only device, and the Si4355 is a receiver-only device based on the Si4x55 architecture. This data sheet covers all three products with the transmit descriptions being relevant for Si4455 and Si4055 and the receive descriptions being relevant for Si4455 and Si4355. Covering all major bands, it combines plug-and-play simplicity with the flexibility needed to handle a wide variety of applications. The compact 3x3 mm package size combined with a low external BOM count makes the Si4x55 both space efficient and cost effective. The +13 dBm output power and excellent sensitivity of –116 dBm allows for a longer operating range, while the low current consumption of 18 mA TX (at 10 dBm), 10 mA RX, and 40 nA standby, provides for superior battery life. By fully integrating all components from the antenna to the GPIO or SPI interface to the MCU, the Si4x55 makes it easy to realize this performance in an application. Design simplicity is further exemplified in the Wireless Development Suite (WDS) user interface software. WDS provides simplified programming options for a broad range of applications in an easy-to-use format that results in faster and lower risk development. The Si4x55 is capable of supporting major worldwide regulatory standards, such as FCC, ETSI, ARIB, and China regulatory standards.

Copyright © 2014 by Silicon Laboratories

Functional Block Diagram

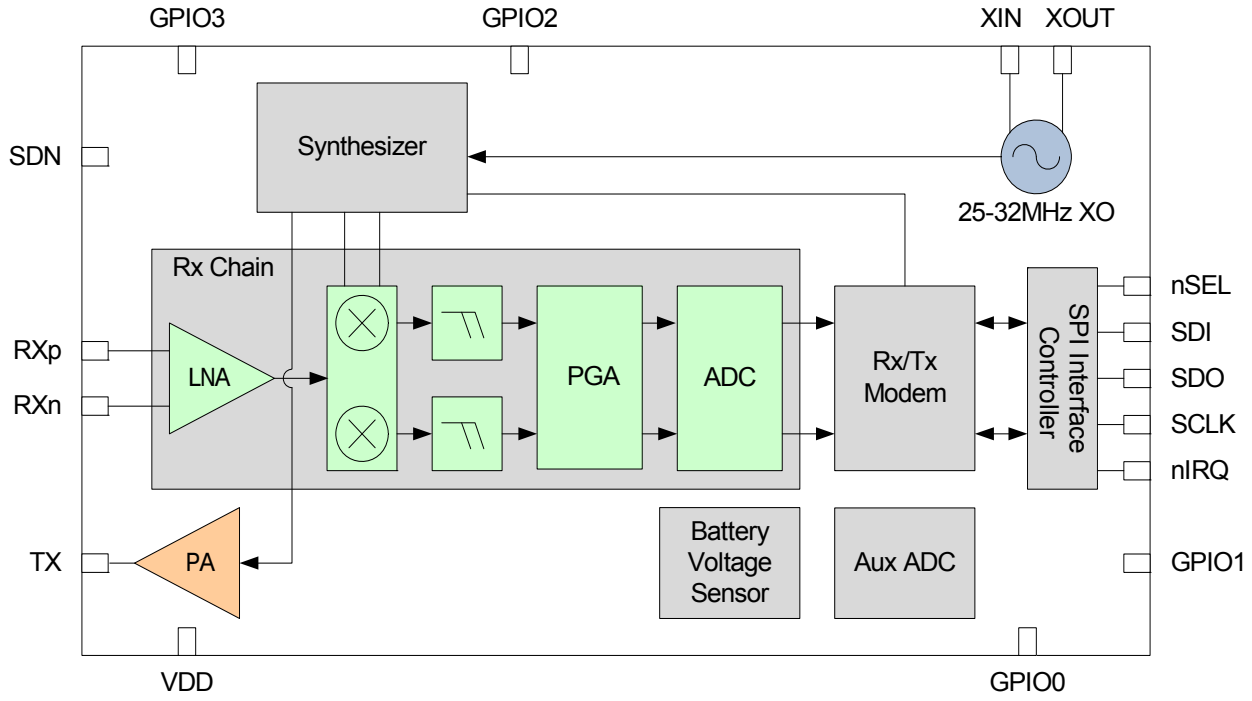

TABLE OF CONTENTS

Section **Page**

1. Electrical Specifications 4
2. Typical Applications Schematic 11
3. Functional Description 12
3.1. Receiver Chain 13
3.2. Receiver Modem 13
3.3. Synthesizer 14
3.4. Transmitter 15
3.5. Crystal Oscillator 16
3.6. Battery Voltage and Auxiliary ADC 16
4. Configuration Options and User Interface 17
4.1. Radio Configuration Application (RCA) GUI 17
4.2. Configuration Options 18
4.3. Configuration Commands 21
5. Controller Interface 22
5.1. Serial Peripheral Interface 22
5.2. Operating Modes and Timing 24
5.3. Interrupts 29
5.4. GPIO 30
6. Data Handling and Packet Handler 31
6.1. RX and TX FIFOs 31
6.2. Packet Handler 31
6.3. Direct Mode 31
7. Pin Descriptions 32
8. Ordering Information 34
9. Package Outline 35
10. PCB Land Pattern 37
11. Top Marking 38
11.1. Si4x55 Top Marking 38
11.2. Top Marking Explanation 38
Contact Information 39

1. Electrical Specifications

Table 1. DC Characteristics

Parameter	Symbol	Test Condition	Min	Typ	Max	Unit
Supply Voltage Range	V_{DD}		1.8	3.3	3.6	V
Power Saving Modes	$I_{Shutdown}$	RC oscillator, main digital regulator, and low power digital regulator OFF.	—	30	—	nA
	$I_{Standby}$	Register values maintained.	—	40	—	nA
	I_{Ready}	Crystal Oscillator and Main Digital Regulator ON, all other blocks OFF.	—	1.8	—	mA
	$I_{SPI\ Active}$	SPI active state		1.5		mA
TUNE Mode Current	I_{Tune_RX}	RX Tune	—	6.8	—	mA
	I_{Tune_TX}	TX Tune	—	7.1	—	mA
RX Mode Current	I_{RX}	Measured at 40 kbps, 20 kHz deviation, 315 MHz	—	10.9	—	mA
TX Mode Current	I_{TX}	+10 dBm output power Measured on direct tie RF evaluation board at 868 MHz	—	19	—	mA
		+13 dBm output power Measured on direct tie RF evaluation board at 868 MHz	—	24	—	mA

Note: All minimum and maximum values are guaranteed across the recommended operating conditions of supply voltage and from –40 to +85 °C unless otherwise stated. All typical values apply at VDD = 3.3 V and 25 °C unless otherwise stated.

Table 2. Synthesizer AC Electrical Characteristics

Parameter	Symbol	Test Condition	Min	Typ	Max	Unit
Synthesizer Frequency Range	F_{SYN}		284	—	350	MHz
			350	—	525	MHz
			850	—	960	MHz
Synthesizer Frequency Resolution	$F_{RES-960}$	850–960 MHz	—	114.4	—	Hz
	$F_{RES-525}$	420–525 MHz	—	57.2	—	Hz
	$F_{RES-420}$	350–420 MHz	—	45.6	—	Hz
	$F_{RES-350}$	283–350 MHz	—	38.1	—	Hz
Phase Noise	Lf(fm)	DF = 10 kHz, 915 MHz	—	100	—	dBc/Hz
		DF = 10 kHz, 915 MHz	—	102.1	—	dBc/Hz
		DF = 10 kHz, 915 MHz	—	123.5	—	dBc/Hz
		DF = 10 kHz, 915 MHz	—	136.6	—	dBc/Hz

Note: All minimum and maximum values are guaranteed across the recommended operating conditions of supply voltage and from –40 to +85 °C unless otherwise stated. All typical values apply at V_{DD} = 3.3 V and 25 °C unless otherwise stated.

Table 3. Receiver AC Electrical Characteristics

Parameter	Symbol	Test Condition	Min	Typ	Max	Unit
RX Frequency Range	F_{RX}		284	—	350	MHz
			350	—	525	MHz
			850	—	960	MHz
RX Sensitivity 915 MHz	P_{RX-_2}	(BER < 0.1%) (2.4 kbps, GFSK, BT = 0.5, ΔF = ±30 kHz, 114 kHz Rx BW)[2]	—	–115.0	—	dBm
	P_{RX-_40}	(BER < 0.1%) (40 kbps, GFSK, BT = 0.5, ΔF = ±25 kHz, 114 kHz Rx BW)[2]	—	–107.6	—	dBm
	P_{RX-_128}	(BER < 0.1%) (128 kbps, GFSK, BT = 0.5, ΔF = ±70 kHz, 305 kHz Rx BW)[2]	—	–103.2	—	dBm
	P_{RX-_OOK}	(BER < 0.1%, 1 kbps, 185 kHz Rx BW, OOK, PN15 data)[2]	—	–113.5	—	dBm
		(BER < 0.1%, 40 kbps, 185 kHz Rx BW, OOK, PN15 data)[2]	—	–102.7	—	dBm
RX Channel Bandwidth	BW		40	—	850	kHz
RSSI Resolution	RES_{RSSI}	Valid from –110 dBm to –90 dBm	—	±0.5	—	dB
±1-Ch Offset Selectivity[2]	C/I_{1-CH}	Desired Ref Signal 3 dB above sensitivity, BER < 0.1%. Interferer is CW and desired modulated with 1.2 kbps, ΔF = 5.2 kHz, GFSK with BT = 0.5, RX BW = 58 kHz channel spacing = 100 kHz	—	–52	—	dB
±2-Ch Offset Selectivity[2]	C/I_{2-CH}		—	–56	—	dB
Blocking 200 kHz–1 MHz[2]	$200K_{BLOCK}$	Desired Ref Signal 3 dB above sensitivity, BER < 0.1%. Interferer is CW and desired modulated with 1.2 kbps ΔF = 5.2 kHz GFSK with BT = 0.5, RX BW = 58 kHz	—	–56	—	dB
Blocking 1 MHz Offset[2]	$1M_{BLOCK}$		—	–71	—	dB
Blocking 8 MHz Offset[2]	$8M_{BLOCK}$		—	–77	—	dB
Image Rejection[2]	Im_{REJ}	Rejection at the image frequency IF = 468 kHz	—	40	—	dB

Notes:
1. All minimum and maximum values are guaranteed across the recommended operating conditions of supply voltage and from –40 to +85 °C unless otherwise stated. All typical values apply at VDD = 3.3 V and 25 °C unless otherwise stated.
2. Conducted measurements on RF evaluation board. Specifications are dependent on frequency, matching components, and board layout.

Table 4. Transmitter AC Electrical Characteristics[1]

Parameter	Symbol	Test Condition	Min	Typ	Max	Unit
TX Frequency Range	F_{TX}		284	—	350	MHz
			350	—	525	MHz
			850	—	960	MHz
(G)FSK Data Rate	DR_{FSK}[2]		1.0	—	500	kbps
OOK Data Rate	DR_{OOK}		0.5	—	120	kbps
Modulation Deviation Range	Δf_{960}	850–960 MHz	—	—	500	kHz
	Δf_{525}	350–525 MHz	—	—	500	kHz
	Δf_{350}	284–350 MHz	—	—	500	kHz
Modulation Deviation Resolution	$F_{RES-960}$	850–1050 MHz	—	114.4	—	Hz
	$F_{RES-525}$	420–525 MHz	—	57.2	—	Hz
	$F_{RES-420}$	350–420 MHz	—	45.6	—	Hz
	$F_{RES-350}$	284–350 MHz	—	38.1	—	Hz
Output Power Range[3]	P_{TX}	Measured at 434 MHz, 3.3 V, Class E match	–20	—	+13	dBm
TX RF Output Steps[3]	ΔP_{RF_OUT}	Using switched current match within 6 dB of max power	—	0.25	—	dB
TX RF Output Level[3] Variation vs. Temperature	ΔP_{RF_TEMP}	–40 to +85 °C	—	2.3	—	dB
TX RF Output Level Variation vs. Frequency[3]	ΔP_{RF_FREQ}	Measured across 902–928 MHz	—	0.6	—	dB
Transmit Modulation Filtering	B*T	Gaussian Filtering Bandwith Time Product	—	0.5	—	

Notes:

1. All minimum and maximum values are guaranteed across the recommended operating conditions of supply voltage and from –40 to +85 °C unless otherwise stated. All typical values apply at VDD = 3.3 V and 25 °C unless otherwise stated.
2. The maximum data rate is dependent on the XTAL frequency and is calculated as per the formula: Maximum Symbol Rate = Fxtal/60, where Fxtal is the XTAL frequency (typically 30 MHz).
3. Conducted measurements based on RF evaluation board. Output power and emissions specifications are dependent on transmit frequency, matching components, and board layout.

Table 5. Auxiliary Block Specifications[1]

Parameter	Symbol	Test Condition	Min	Typ	Max	Unit
XTAL Range[2]	$XTAL_{RANGE}$		25	—	32	MHz
30 MHz XTAL Start-Up time	t_{30M}	Using XTAL and board layout in reference design. Start-up time will vary with XTAL type and board layout.	—	300	—	µs
30 MHz XTAL Cap Resolution	$30M_{RES}$		—	70	—	fF
POR Reset Time	t_{POR}		—	—	6	ms
Microcontroller Clock Output Frequency Range[3]		Configurable to Fxtal or Fxtal divided by 2, 3, 7.5, 10, 15, or 30 where Fxtal is the reference XTAL frequency. In addition, 32.768 kHz is also supported.	32.768 k	—	Fxtal	Hz

Notes:
1. All minimum and maximum values are guaranteed across the recommended operating conditions of supply voltage and from –40 to +85 °C unless otherwise stated. All typical values apply at V_{DD} = 3.3 V and 25 °C unless otherwise stated.
2. XTAL Range tested in production using an external clock source (similar to using a TCXO).
3. Microcontroller clock frequency tested in production at 1 MHz, 30 MHz, 32 MHz, and 32.768 kHz. Other frequencies tested by bench characterization.

Table 6. Digital IO Specifications (GPIO_x, SCLK, SDO, SDI, nSEL, nIRQ)[1]

Parameter	Symbol	Test Condition	Min	Typ	Max	Unit
Rise Time[2,3]	T_{RISE}	0.1 x V_{DD} to 0.9 x V_{DD}, C_L= 10 pF, DRV<1:0> = LL V_{DD} = 3.3 V	—	2.3	—	ns
Fall Time[3,4]	T_{FALL}	0.9 x V_{DD} to 0.1 x V_{DD}, C_L= 10 pF, DRV<1:0> = LL V_{DD} = 3.3 V	—	2	—	ns
Input Capacitance	C_{IN}		—	2	—	pF
Logic High Level Input Voltage	V_{IH}		V_{DD} x 0.7	—	—	V
Logic Low Level Input Voltage	V_{IL}		—	—	V_{DD} x 0.3	V
Input Current	I_{IN}	0 < V_{IN} < V_{DD}	–1	—	1	µA
Input Current if Pullup is Activated	I_{INP}	V_{IL} = 0 V	1	—	4	µA
Drive Strength for Output Low Level	I_{OmaxLL}	DRV[1:0] = LL[3]	—	6.66	—	mA
	I_{OmaxLH}	DRV[1:0] = LH[3]	—	5.03	—	mA
	I_{OmaxHL}	DRV[1:0] = HL[3]	—	3.16	—	mA
	I_{OmaxHH}	DRV[1:0] = HH[3]	—	1.13	—	mA
Drive Strength for Output High Level (GPIO1, GPIO2, GPIO3)	I_{OmaxLL}	DRV[1:0] = LL[3]	—	5.75	—	mA
	I_{OmaxLH}	DRV[1:0] = LH[3]	—	4.37	—	mA
	I_{OmaxHL}	DRV[1:0] = HL[3]	—	2.73	—	mA
	I_{OmaxHH}	DRV[1:0] = HH[3]	—	0.96	—	mA
Drive Strength for Output High Level (GPIO0)	I_{OmaxLL}	DRV[1:0] = LL[3]	—	2.53	—	mA
	I_{OmaxLH}	DRV[1:0] = LH[3]	—	2.21	—	mA
	I_{OmaxHL}	DRV[1:0] = HL[3]	—	1.70	—	mA
	I_{OmaxHH}	DRV[1:0] = HH[3]	—	0.80	—	mA
Logic High Level Output Voltage	V_{OH}	DRV[1:0] = HL[3]	V_{DD} x 0.8	—	—	V
Logic Low Level Output Voltage	V_{OL}	DRV[1:0] = HL[3]	—	—	V_{DD} x 0.2	V

Notes:
1. All minimum and maximum values are guaranteed across the recommended operating conditions of supply voltage and from –40 to +85 °C unless otherwise stated. All typical values apply at VDD = 3.3 V and 25 °C unless otherwise stated.
2. 6.7 ns is typical for GPIO0 rise time.
3. Assuming VDD = 3.3 V, drive strength is specified at Voh (min) = 2.64 V and Vol (max) = 0.66 V at room temperature.
4. 2.4 ns is typical for GPIO0 fall time.

Table 7. Thermal Characteristics

Parameter	Symbol	Max Value	Unit
Thermal Impedance Junction to Ambient*	θ_{JA}	71	°C/W
Junction Temperature Maximum Value*	T_J	96	°C
Operating Ambient Temperature Range	T_A	–40 to +85	°C
Storage Temperature Range	T_{STG}	–55 to +150	°C
***Note:** Thermal Impedance and Junction Temperature based on RF evaluation board measurements.			

Table 8. Absolute Maximum Ratings

Parameter	Value	Unit
V_{DD} to GND	–0.3, +3.6	V
Voltage on Digital Control Inputs	–0.3, V_{DD} + 0.3	V
Instantaneous $V_{RF\text{-}peak}$ to GND on TX Output Pin	–0.3, V_{DD} + 0.3	V
Sustained $V_{RF\text{-}peak}$ to GND on TX Output Pin	–0.3, V_{DD} + 8.0	V
Voltage on Analog Inputs	–0.3, V_{DD} + 6.5	V
RX Input Power	+10	dBm
Note: Stresses beyond those listed under “Absolute Maximum Ratings” may cause permanent damage to the device. These are stress ratings only and functional operation of the device at or beyond these ratings in the operational sections of the specifications is not implied. Exposure to absolute maximum rating conditions for extended periods may affect device reliability. The Power Amplifier may be damaged if switched on without proper load or termination connected. TX matching network design will influence TX $V_{RF\text{-}peak}$ on TX output pin. Caution: ESD sensitive device.		

2. Typical Applications Schematic

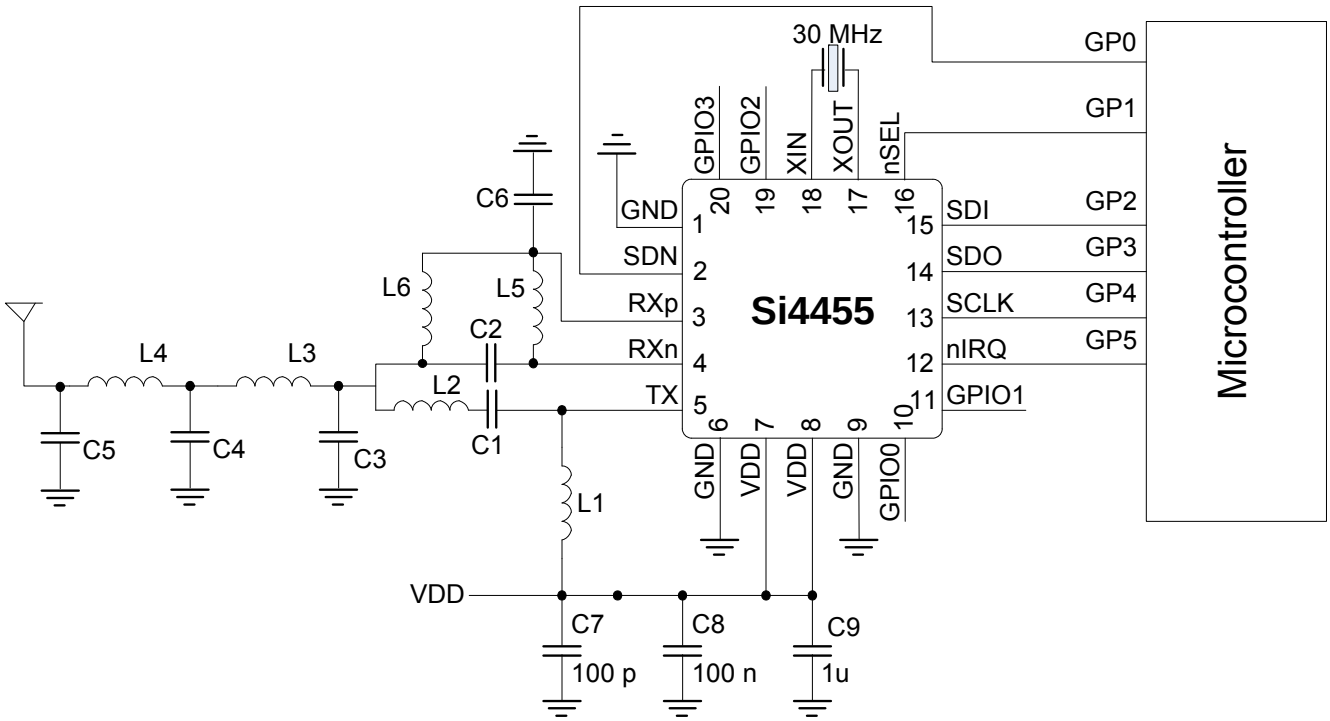

Figure 1. Si4455 Application Circuit

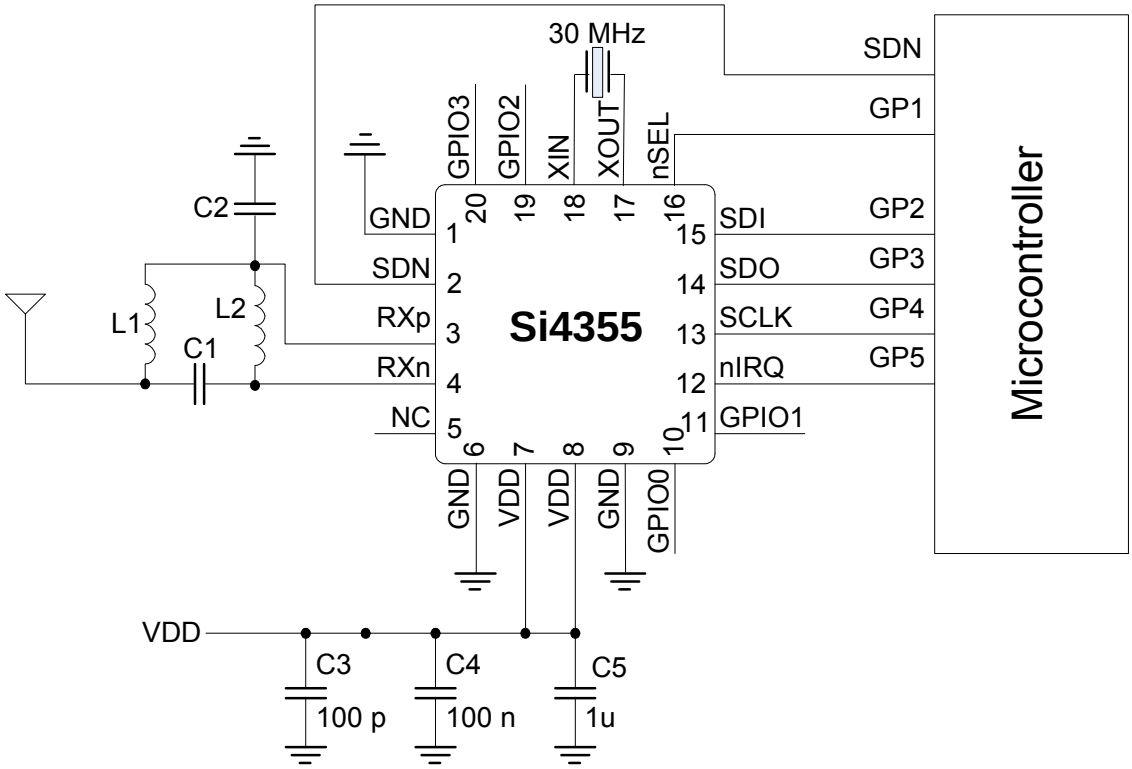

Figure 2. Si4355 Applications Circuit

3. Functional Description

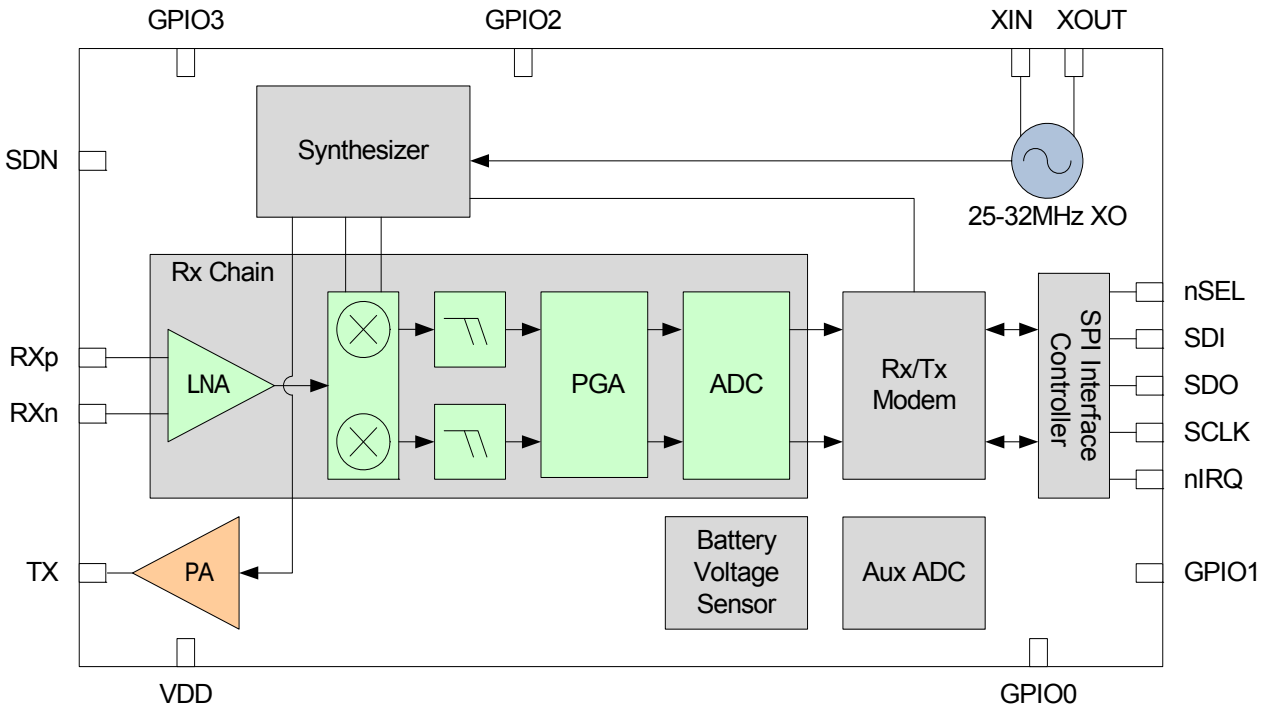

Figure 3. Si4455 Functional Block Diagram

The Si4x55 is an easy-to-use, size efficient, low current wireless ISM device that covers the sub-GHz bands. The wide operating voltage range of 1.8–3.6 V and low current consumption make the Si4x55 an ideal solution for battery powered applications. The Si4455 operates as a time division duplexing (TDD) transceiver where the device alternately transmits and receives data packets. The device uses a single-conversion mixer to downconvert the FSK/GFSK or OOK modulated receive signal to a low IF frequency. Following a programmable gain amplifier (PGA), the signal is converted to the digital domain by a high performance ΔΣ ADC allowing filtering, demodulation, slicing, and packet handling to be performed in the built-in digital modem, increasing the receiver's performance and flexibility versus analog based architectures. The demodulated signal is output to the system MCU through a programmable GPIO or via the standard SPI bus by reading the 64-byte Rx FIFO.

A single high-precision local oscillator (LO) is used for both transmit and receive modes since the transmitter and receiver do not operate at the same time. The LO signal is generated by an integrated VCO and ΔΣ Fractional-N PLL synthesizer. The synthesizer is designed to support configurable data rates up to 500 kbps. The Si4x55 operates in the frequency bands of 283–350, 350–525, and 850–960 MHz. The transmit FSK data is modulated directly into the ΔΣ data stream and can be shaped by a Gaussian low-pass filter to reduce unwanted spectral content.

The device contains a power amplifier (PA) that supports output powers up to +13 dBm and is designed to support single coin cell operation with current consumption of 18 mA for +10 dBm output power. The PA is single-ended to allow for easy antenna matching and low BOM cost. The PA incorporates automatic ramp-up and ramp-down control to reduce unwanted spectral spreading. Additional system features, such as 64-byte TX/RX FIFOs, preamble detection, sync word detector, and CRC, reduce overall current consumption and allow for the use of lower-cost system MCUs. Power-on-reset (POR) and GPIOs further reduce overall system cost and size. The Si4x55 is designed to work with an MCU, crystal, and a few passives to create a very compact and low-cost system.

3.1. Receiver Chain

The internal low-noise amplifier (LNA) is designed to be a wideband LNA that can be matched with three external discrete components to cover any common range of frequencies in the sub-GHz band. The LNA has extremely low noise to suppress the noise of the following stages and achieve optimal sensitivity; therefore, no external gain or front-end modules are necessary. The LNA has gain control, which is controlled by the internal automatic gain control (AGC) algorithm. The LNA is followed by an I-Q mixer, filter, programmable gain amplifier (PGA), and ADC. The I-Q mixers downconvert the signal to an intermediate frequency. The PGA then boosts the gain to be within dynamic range of the ADC. The ADC rejects out-of-band blockers and converts the signal to the digital domain where filtering, demodulation, and processing is performed. Peak detectors are integrated at the output of the LNA and PGA for use in the AGC algorithm.

The RX and TX pins can be directly tied externally on the Si4455 transceiver.

3.2. Receiver Modem

Using high-performance ADCs allows channel filtering, image rejection, and demodulation to be performed in the digital domain, which allows for flexibility in optimizing the device for particular applications. The digital modem performs the following functions:

- Channel selection filter
- Preamble detection
- Invalid preamble detection
- TX modulation
- RX demodulation
- Automatic Gain Control (AGC)
- Automatic frequency compensation (AFC)
- Radio signal strength indicator (RSSI)
- Cyclic redundancy check (CRC)

The digital channel filter and demodulator are optimized for ultra-low-power consumption and are highly configurable. Supported modulation types are GFSK, FSK, and OOK. The channel filter can be configured to support bandwidths ranging from 850 kHz down to 40 kHz. A large variety of data rates are supported ranging from 0.5 kbps up to 500 kbps. The configurable preamble detector is used with the synchronous demodulator to improve the reliability of the sync-word detection. Preamble detection can be skipped using only sync detection, which is a valuable feature of the asynchronous demodulator when very short preambles are used. The received signal strength indicator (RSSI) provides a measure of the signal strength received on the tuned channel. The resolution of the RSSI is 0.5 dB. This high-resolution RSSI enables accurate channel power measurements for clear channel assessment (CCA), carrier sense (CS), and listen before talk (LBT) functionality. A wireless communication channel can be corrupted by noise and interference, so it is important to know if the received data is free of errors. A cyclic redundancy check (CRC) is used to detect the presence of erroneous bits in each packet. A CRC is computed and appended at the end of each transmitted packet and verified by the receiver to confirm that no errors have occurred. The packet handler and CRC can significantly reduce the load on the system microcontroller, allowing for a simpler and cheaper microcontroller. The digital modem includes the TX modulator, which converts the TX data bits into the corresponding stream of digital modulation values to be summed with the fractional input to the sigma-delta modulator. This modulation approach results in highly accurate resolution of the frequency deviation. A Gaussian filter is implemented to support GFSK, considerably reducing the energy in adjacent channels. The default bandwidth-time (BT) product is 0.5 for all programmed data rates.

3.2.1. Received Signal Strength Indicator

The received signal strength indicator (RSSI) is an estimate of the signal strength in the channel to which the receiver is tuned. The RSSI measurement is done after the channel filter, so it is only a measurement of the desired or undesired in-band signal power. The Si4x55 uses a fast response register to read RSSI and so can complete the read in 16 SPI clock cycles with no requirement to wait for CTS. The RSSI value reported by this API command can be converted to dBm using the following equation:

$$RSSI_{dBm} = \frac{RSSI_value}{2} - 130$$

The value of 130 in the above formula is based on bench characterization of the EZRadio RF Pico boards (evaluation boards). The RSSI value is latched at sync word detection and can be read via the fast response register. The latched value of RSSI is available until the device re-enters Rx mode. In addition, the current value of RSSI can be read out using the GET_MODEM_STATUS command. This can be used to implement CCA (clear channel assessment) functionality. The user can set up an RSSI threshold value using the WDS Radio Configuration Application GUI.

3.3. Synthesizer

The Si4x55 includes an integrated Sigma Delta (EΔ) Fractional-N PLL synthesizer capable of operating over the bands from 283–350, 350–525, and 850–960 MHz. The synthesizer has many advantages; it provides flexibility in choosing data rate, deviation, channel frequency, and channel spacing. The transmit modulation is applied directly to the loop in the digital domain through the fractional divider, which results in very precise accuracy and control over the transmit deviation. The frequency resolution is (2/3)Freq_xo/(2^{19}) for 283–350 MHz, Freq_xo/(2^{19}) for 350–525 MHz, and Freq_xo/(2^{18}) for 850–960 MHz. The nominal reference frequency to the PLL is 30 MHz, but any XTAL frequency from 25 to 32 MHz may be used. The modem configuration calculator in WDS will automatically account for the XTAL frequency being used. The PLL utilizes a differential LC VCO with integrated on-chip inductors. The output of the VCO is followed by a configurable divider, which will divide the signal down to the desired output frequency band.

3.3.1. Synthesizer Frequency Control

The frequency is set by changing the integer and fractional settings to the synthesizer. The WDS calculator will automatically provide these settings, but the synthesizer equation is shown below for convenience. Initial frequency settings are configured in the EZConfig setup and can also be modified using the API commands: FREQ_CONTROL_INTE, FREQ_CONTROL_FRAC2, FREQ_CONTROL_FRAC1, and FREQ_CONTROL_FRAC0.

$$RF\ frequency = \left(fc_inte + \frac{fc_frac}{2^{19}}\right) \times \frac{4 \times freq_xo}{outdiv}(Hz)$$

Note: The fc_frac/2^{19} value in the above formula must be a number between 1 and 2. The LSB of fc_frac must be "1".

Table 9. Output Divider (Outdiv) Values

Outdiv	Lower (MHz)	Upper (MHz)
12	284	350
10	350	420
8	420	525
4	850	960

3.3.1.1. EZ Frequency Programming

EZ frequency programming allows for easily changing radio frequency using a single API command. The base frequency is first set using the EZConfig setup. This base frequency will correspond to channel 0. Next, a channel step size is also programmed within the EZConfig setup. The resulting frequency will be:

$$RF\ Frequency = Base\ Frequency + Channel \times Step\ Size$$

The second argument of the START_RX or START_TX is CHANNEL, which sets the channel number for EZ frequency programming. For example, if the channel step size is set to 1 MHz, the base frequency is set to 900 MHz, and a CHANNEL number of 5 is programmed during the START_TX command, the resulting frequency will be 905 MHz. If no CHANNEL argument is written as part of the START_RX/TX command, it will default to the previous value. The initial value of CHANNEL is 0 and so will be set to the base frequency if this argument is never used.

3.4. Transmitter

The device contains a +13 dBm power amplifier that is capable of transmitting from –40 to +13 dBm. The output power set size is dependent on the power level and can be seen in Figure 4. The PA power level is set using the API command: PA_PWR_LVL. The power amplifier is single-ended to allow for easy antenna matching and low BOM cost. For detailed matching values, BOM, and performance expectations, refer to "AN686: Antennas for the Si4455/4355 RF ICs". Power ramp-up and ramp-down is automatically performed to reduce unwanted spectral spreading.

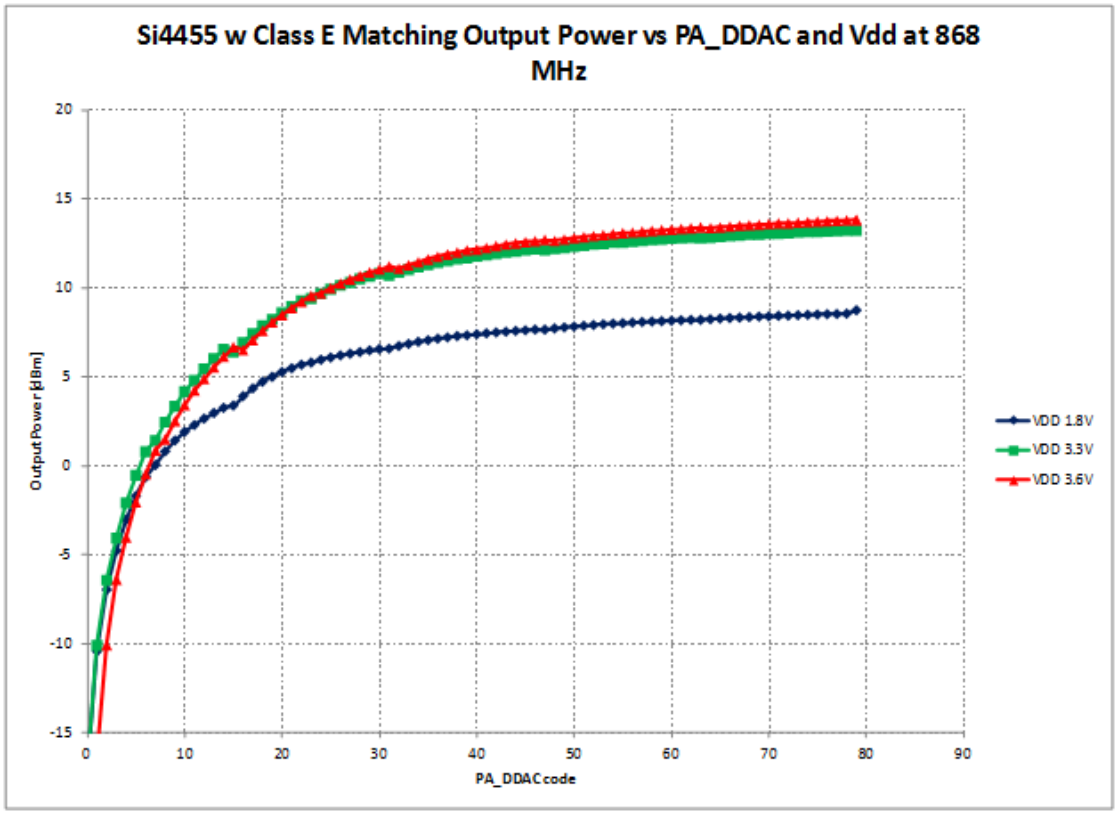

Figure 4. Tx Power vs PA_PWR_LVL and VDD

3.5. Crystal Oscillator

The Si4x55 includes an integrated crystal oscillator with a fast start-up time of less than 250 µs. The design is differential with the required crystal load capacitance integrated on-chip to minimize the number of external components. By default, all that is required off-chip is the crystal. The default crystal is 30 MHz, but the circuit is designed to handle any XTAL from 25 to 32 MHz, set in the EZConfig setup. The crystal load capacitance can be digitally programmed to accommodate crystals with various load capacitance and to adjust the frequency of the crystal oscillator. The tuning of the crystal load capacitance is programmed through the GLOBAL_XO_TUNE API property. The total internal capacitance is 11 pF and is adjustable in 127 steps (70 fF/step). The crystal frequency adjustment can be used to compensate for crystal production tolerances. The frequency offset characteristics of the capacitor bank are demonstrated in Figure 5.

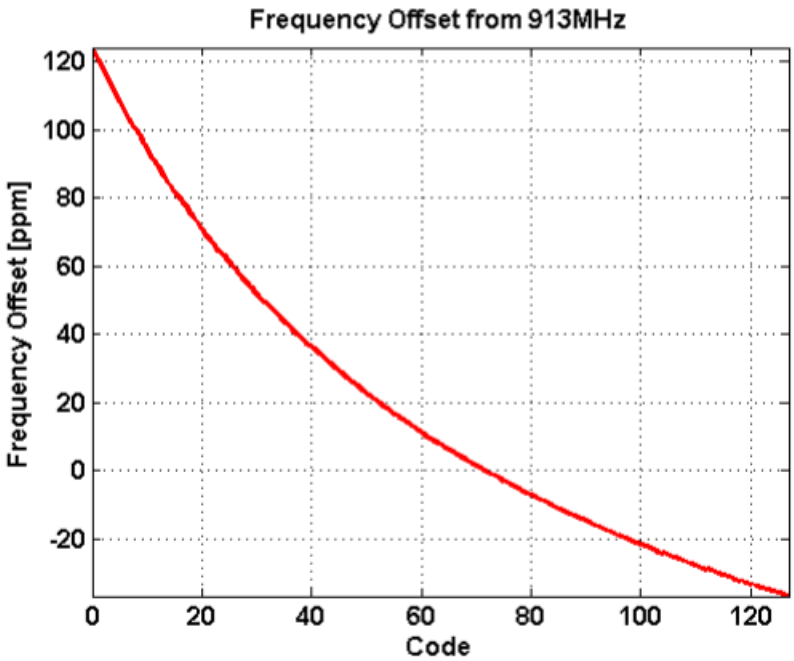

Figure 5. Capacitor Bank Frequency Offset Characteristics

An external signal source can easily be used in lieu of a conventional XTAL and should be connected to the XIN pin. The incoming clock signal is recommended to be ac-coupled to the XIN pin since the dc bias is controlled by the internal crystal oscillator buffering circuitry. The input swing range should be between 600 mV–1.8 V peak-to-peak. If external drive is desired, the incoming signal amplitude should not go below 0 V or exceed 1.8 V. The best dc bias should be approximately 0.7 V. However, if the signal swing exceeds 1.4 Vpp, the dc bias can be set to 1/2 the peak-to-peak voltage swing. The XO capacitor bank should be set to 0 whenever an external drive is used on the XIN pin. In addition, the POWER_UP command should be invoked with the TCXO option whenever external drive is used.

3.6. Battery Voltage and Auxiliary ADC

The Si4x55 contains an integrated auxiliary 11-bit ADC used for the internal battery voltage detector or an external component via GPIO. The Effective Number of Bits (ENOB) is 9 bits. When measuring external components, the input voltage range is 1 V, and the conversion rate is between 300 Hz to 2.44 kHz. The ADC value is read by first sending the GET_ADC_READING command and enabling the desired inputs. When the conversion is finished and all the data is ready, CTS will go high, and the data can be read out. For details on this command and the formulas needed to interpret the results, refer to the EZRadio API documentation zip file available from www.silabs.com.

4. Configuration Options and User Interface

4.1. Radio Configuration Application (RCA) GUI

The Radio Configuration Application (RCA) GUI is part of the Wireless Development Suite (WDS) program. This setup interface provides an easy path to quickly selecting and loading the desired configuration for the device. The RCA allows for two different methods for device setup. One option is the configuration table, which provides a list of preloaded, common configurations. A second option allows for custom configurations to be loaded. After the desired configuration is selected, the RCA automatically creates the EZConfig configuration array that will be passed to the chip for setup. The program then gives the option to load a sample project with the selected configuration onto the evaluation board or launch IDE with the new configuration array preloaded into the user program. For more information on EZConfig usage, refer to application note, “AN692: Si4355/Si4455 Programming Guide”.

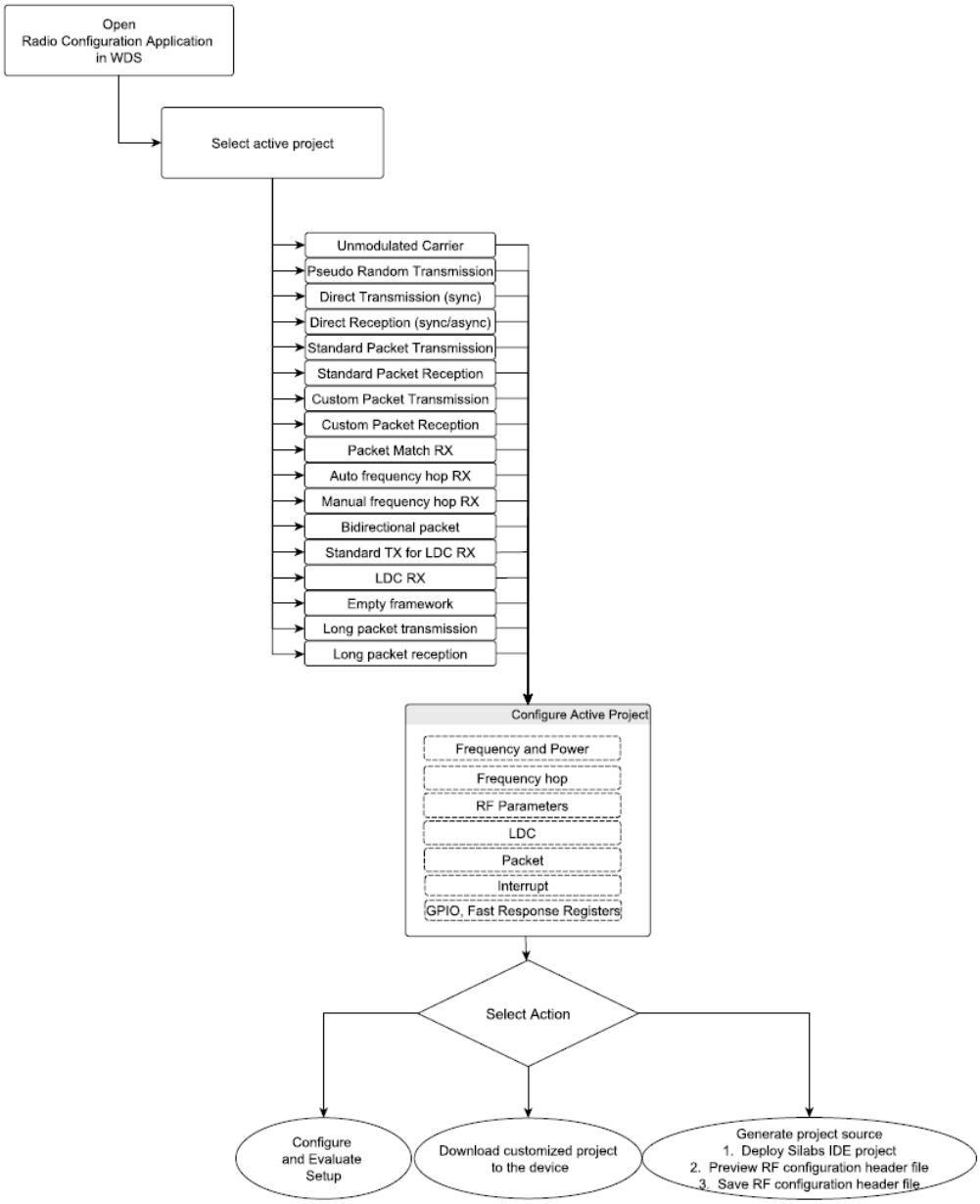

Figure 6. Device Configuration Options

4.1.1. Radio Configuration Application

The Radio Configuration Application provides an intuitive interface for directly modifying the device configuration. Using this control panel, the device parameters such as modulation type, data rate, frequency deviation, and any packet related settings can be set. The program then takes these parameters and automatically determines the appropriate device settings. This method allows the user to have complete flexibility in determining the configuration of the device without the need to translate the system requirements into device specific properties. The resulting configuration array is automatically generated and available for use in the user's program. The resulting configuration array is obfuscated; therefore, its content changes every time a new array is generated, even if the input parameters are the same.

4.2. Configuration Options

4.2.1. Frequency Band

The Si4455 can operate in the 283–350 MHz, 350–525 MHz, or 850–960 MHz bands. One of these three bands will be selected during the configuration setup and then the specific transmission frequency that will be used within this band can be selected.

4.2.2. Modulation Type

The Si4x55 can operate using On/Off Keying (OOK), Frequency Shift Keying (FSK), or Gaussian Frequency Shift Keying (GFSK). OOK modulation is the most basic modulation type available. It is the most power-efficient method and does not require as high oscillator accuracy as FSK. FSK provides the best sensitivity and range performance, but generally requires more precision from the oscillator used. GFSK is a version of FSK where the signal is passed through a Gaussian filter, limiting its spectral width. As a result, the out-of-band components of the signal are reduced.

The Si4x55 also has an option for Manchester coding. This method provides a state transition at each bit and so allows for more reliable clock recovery. Manchester code is available only when using the packet handler option and, if selected, will be applied to the entire packet (the preamble pattern is set to continuous “1” if the Manchester mode is enabled; therefore, the chip rate of the resulting preamble pattern is the same as for the rest of the packet). The polarity can be configured to a “10” or “01”.

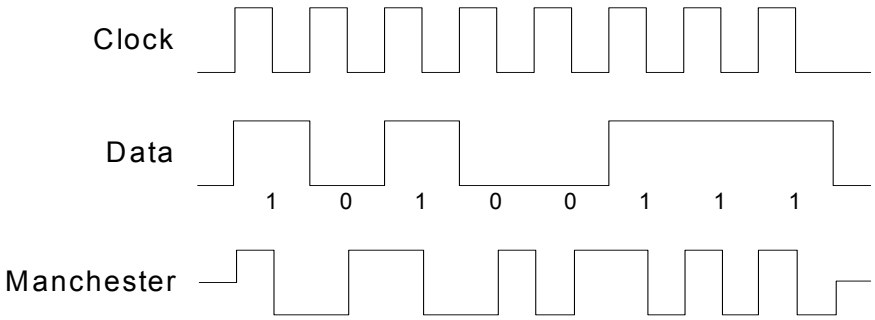

Figure 7. Manchester Code Example

4.2.3. Frequency Deviation

If FSK or GFSK modulation is selected, then a frequency deviation will also need to be selected. The frequency deviation is the maximum instantaneous difference between the FM modulated frequency and the nominal carrier frequency. The Si4x55 can operate across a wide range of data rates and frequency deviations. If a frequency deviation needs to be selected, the following guideline might be helpful to build a robust link. A proper frequency deviation is linked to the frequency error between transmitter and receiver. The frequency error can be calculated using the crystal tolerance parameters and the RF operating frequency: (ppm_tx+ppm_rx)*Frf/1E-6. For frequency errors below 50 kHz, the deviation can be about the same as the frequency error. For frequency errors exceeding 50 kHz, the frequency deviation can be set to about 0.75 times the frequency error. It is advised to position the modulation index (= 2*freq_dev/data_rate) into a range between 1 and 100 for Packet Handling mode and 2 to 100 for direct mode (non-standard preamble). For example, when in Packet Handling mode and the frequency error is smaller than data_rate/2, the frequency deviation is set to about data_rate/2. When the frequency error exceeds 100xdata_rate/2, the frequency deviation is preferred to be set to 100xdata_rate/2.

4.2.4. Channel Bandwidth

The channel bandwidth sets the bandwidth for the receiver. Since the receiver bandwidth is directly proportional to the noise allowed in the system, this will normally be set as low as possible. The specific channel bandwidth used will usually be determined based upon the precision of the oscillator and the frequency deviation of the transmitted signal. The RCA can provide the recommended channel bandwidth based upon these two parameters to help optimize the system.

4.2.5. Preamble Length

A preamble is a defined simple bit sequence used to notify the receiver that a data transmission is imminent. The length of this preamble will normally be set as short as possible to minimize power while insuring that it will be reliably detected given the receiver characteristics, such as duty cycling and packet error rate performance. The Si4x55 allows the preamble length to be set between 0 to 255 bytes in length with a default length of 4 bytes. The preamble pattern for the Si4x55 will always be 55h with a first bit of “0” if the packet handler capability is used.

4.2.6. Sync Word Length and Pattern

The sync word follows the preamble in the packet structure and is used to identify the start of the payload data and to synchronize the receiver to the transmitted bit stream. The Si4x55 allows for sync word lengths of 1 to 4 bytes and the specific pattern can be set within the RCA program. The default is a 2 byte length 2d d4 pattern.

4.2.7. Cyclic Redundancy Check

Cyclic Redundancy Check (CRC) is used to verify that no errors have occurred during transmission and the received packet has exactly the same data as it did when transmitted. If this function is enabled in the Si4x55, the last byte of transmitted data must include the CRC generated by the transmitter. The Si4x55 then performs a CRC calculation on the received packet and compares that to the transmitted CRC. If these two values are the same, the Si4455 will set an interrupt indicating a valid packet has been received and is waiting in the Rx FIFO. If these two CRC values differ, the Si4455 will flag an interrupt indicating that a packet error occurred. The Si4x55 uses CRC(16)-IBM: x16+x15+x2+1 with a seed of 0xFFFF as well as a 16-bit ITU-T CRC as specified in the IEEE 802.15.4g standard.

4.2.8. Preamble Sense Mode

This mode of operation is suitable for extremely low power applications where power consumption is important. The preamble sense mode (PSM) takes advantage of the Digital Signal Arrival detector (DSA), which can detect a preamble within eight bit times with no sensitivity degradation. This fast detection of an incoming signal can be combined with duty cycling of the receiver during the time the device is searching or sniffing for packets over the air. The average receive current is lowered significantly when using this mode. In applications where the timing of the incoming signal is unknown, the amount of power savings is primarily dependent on the data rate and preamble length as the Rx inactive time is determined by these factors. In applications where the sleep time is fixed and the timing of the incoming signal is known, the average current also depends on the sleep time. The PSM mode is similar to the low duty cycle mode but has the benefit of faster signal detection and autonomous duty cycling of the receiver to achieve even lower average receive currents.

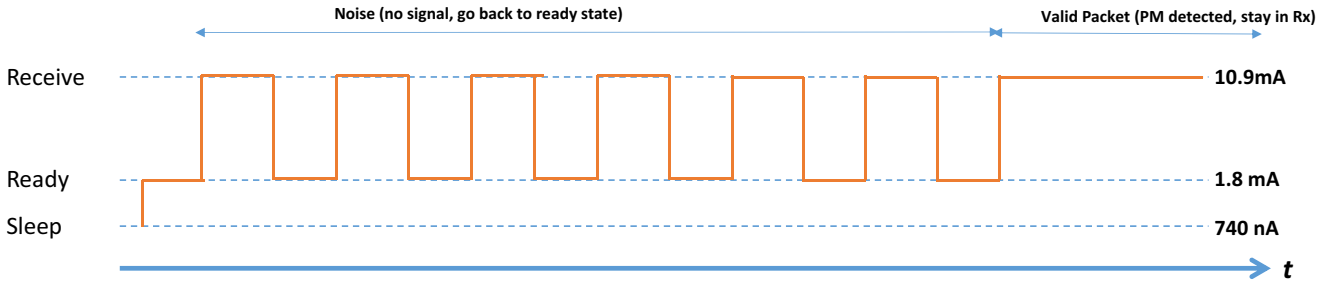

Figure 8. Preamble Sense Mode

Table 10. Data Rates*

	Data Rate				
	1.2 kbps	**9.6 kbps**	**50 kbps**	**100 kbps**	
PM length = 4 bytes	5.8	6.1	7.6	9.3	mA
PM length = 8 bytes	3.6	3.7	4.3	5.0	mA
***Note:** Typical values. Active RX current is 10.9 mA.					

4.3. Configuration Commands

The RCA provides all of the code needed for basic radio configuration. Once the setup is completed in the GUI, the program outputs configuration array(s) that can be sent to the radio via the SPI interface. No additional setup coding is needed. The configuration command process is shown in Figure 9. As shown below, the configuration is sent to the device in two EZCONFIG_ARRAY_WRITE commands with a NOP between them. The second EZCONFIG_ARRAY_WRITE can be sent after CTS is received for the NOP command. The NOP can be sent immediately after the first EZCONFIG_ARRAY_WRITE command. EZCONFIG_ARRAY_WRITE uses the same command code as WRITE_TX_FIFO (0x66). The EZCONFIG_SETUP passes the configuration array to the device and the EZCONFIG_CHECK insures that all of the configuration data was written correctly. For more information on the setup commands, refer to “AN692: Si4355/Si4455 Programming Guide” and the EZRadio API Documentation zip file available from www.silabs.com.

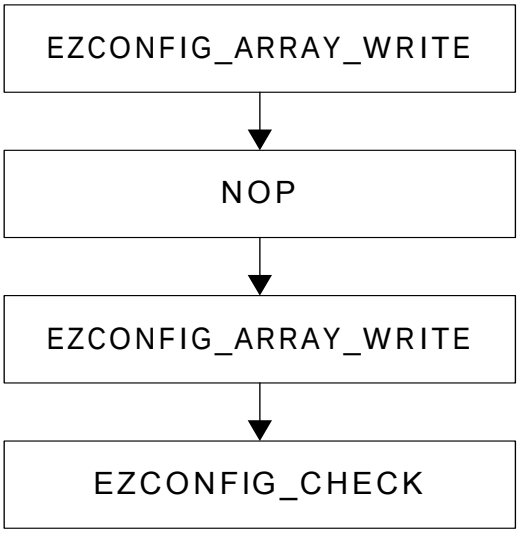

Figure 9. Configuration Command Flowchart

5. Controller Interface

5.1. Serial Peripheral Interface

The Si4x55 communicates with the host MCU over a standard 4-wire serial peripheral interface (SPI): SCLK, SDI, SDO, and nSEL. The SPI interface is designed to operate at a maximum of 10 MHz. The SPI timing parameters are listed in Table 11. The host MCU writes data over the SDI pin and can read data from the device on the SDO output pin. Figure 10 shows an SPI write command. The nSEL pin should go low to initiate the SPI command. The first byte of SDI data will be one of the API commands followed by n bytes of parameter data which will be variable depending on the specific command. The rising edges of SCLK should be aligned with the center of the SDI data.

Table 11. Serial Interface Timing Parameters

Symbol	Parameter	Min (ns)	Max (ns)	Diagram
t_{CH}	Clock high time	40		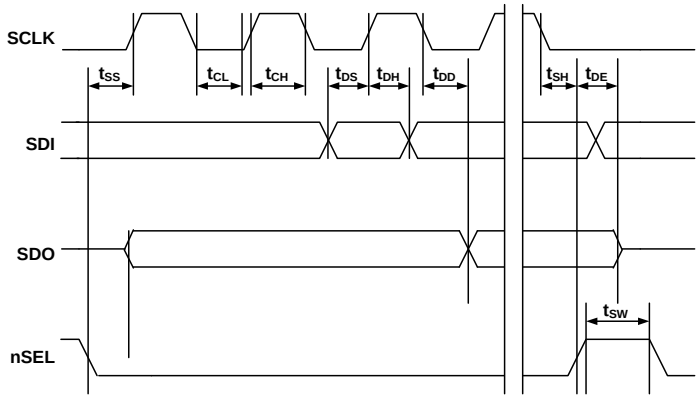
t_{CL}	Clock low time	40		
t_{DS}	Data setup time	20		
t_{DH}	Data hold time	20		
t_{DD}	Output data delay time		43	
t_{DE}	Output disable time		45	
t_{SS}	Select setup time	20		
t_{SH}	Select hold time	50		
t_{SW}	Select high period	80		
***Note:** CL = 10 pF; VDD = 1.8 V; SDO Drive strength setting = 10.				

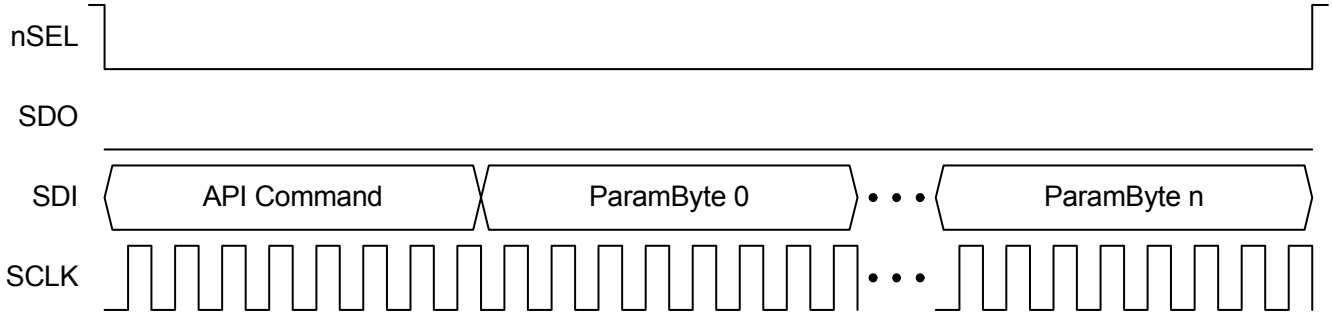

Figure 10. SPI Write Command

The Si4x55 contains an internal MCU which controls all the internal functions of the radio. For SPI read commands, a typical communication flow of checking clear-to-send (CTS) is used to make sure the internal MCU has executed the command and prepared the data to be output over the SDO pin. Figure 11 demonstrates the general flow of an SPI read command. Once the CTS value reads FFh, then the read data is ready to be clocked out to the host MCU. The typical time for a valid FFh CTS reading is 20 µs. Figure 12 demonstrates the remaining read cycle after CTS is set to FFh. The internal MCU will clock out the SDO data on the negative edge so the host MCU should process the SDO data on the rising edge of SCLK.

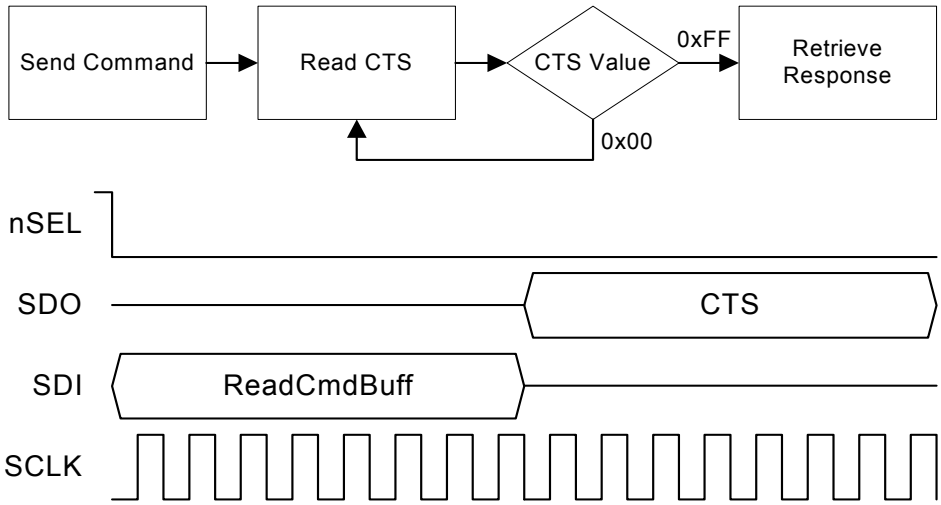

Figure 11. SPI Read Command—Check CTS Value

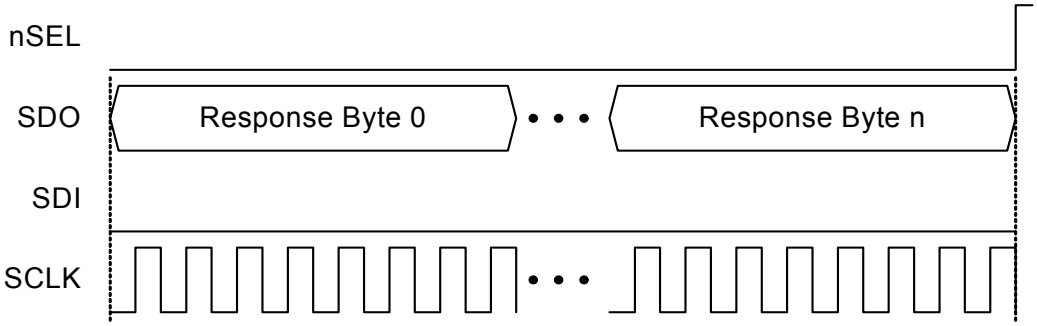

Figure 12. SPI Read Command—Clock Out Read Data

5.2. Operating Modes and Timing

The primary states of the Si4x55 are shown in Figure 13. The shutdown state completely shuts down the radio, minimizing current consumption and is controlled using the SDN (pin 2). All other states are controlled using the API commands START_RX, START_TX and CHANGE_STATE. Table 12 shows each of the operating modes with the time required to reach either RX or TX state as well as the current consumption of each state. The times in Table 12 are measured from the rising edge of nSEL until the chip is in the desired state. This information is included for reference only since an automatic sequencer moves the chip from one state to another and so it is not necessary to manually step through each state. Figure 14 and Figure 15 demonstrate this timing and the current consumption for each radio state as the chip moves from shutdown or standby to TX and back. Most applications will utilize the standby mode since this provides the fastest transition response time, maintains all register values, and results in nearly the same current consumption as shutdown.

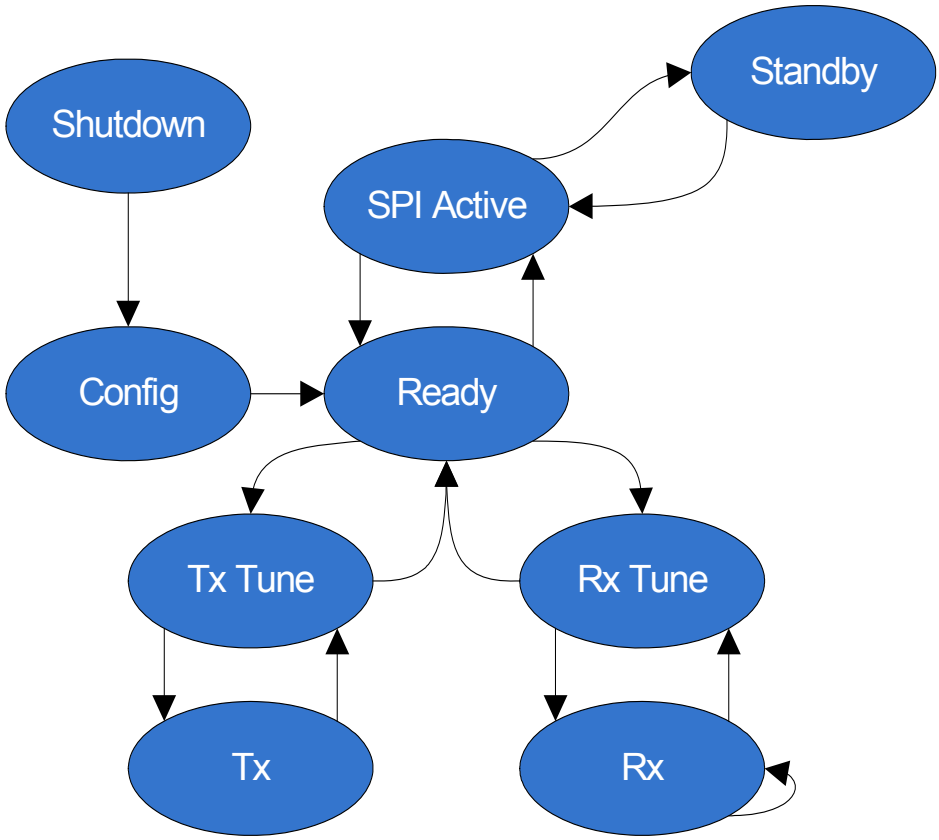

Figure 13. State Machine Diagram

Table 12. Operating State Response Time and Current Consumption

State / Mode	Response Time to		Current in State / Mode
	Tx	Rx	
Shutdown	30 ms	30 ms	30 nA
Standby	504 µs	516 µs	40 nA
SPI Active	288 µs	296 µs	1.5 mA
Ready	108 µs	120 µs	1.8 mA
Tx Tune	60 µs		6.8 mA
Rx Tune		84 µs	7.1 mA
Tx		132 µs	18 mA @ +10 dBm
Rx	120 µs	108 µs	10.9 mA

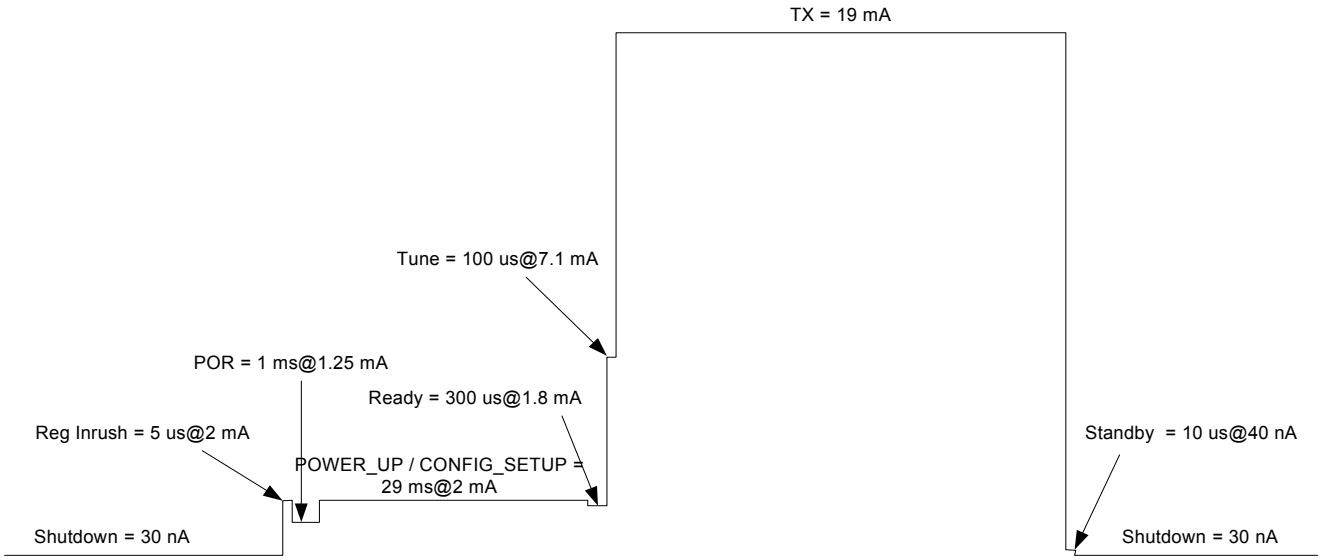

Figure 14. Start-Up Timing and Current Consumption using Shutdown State

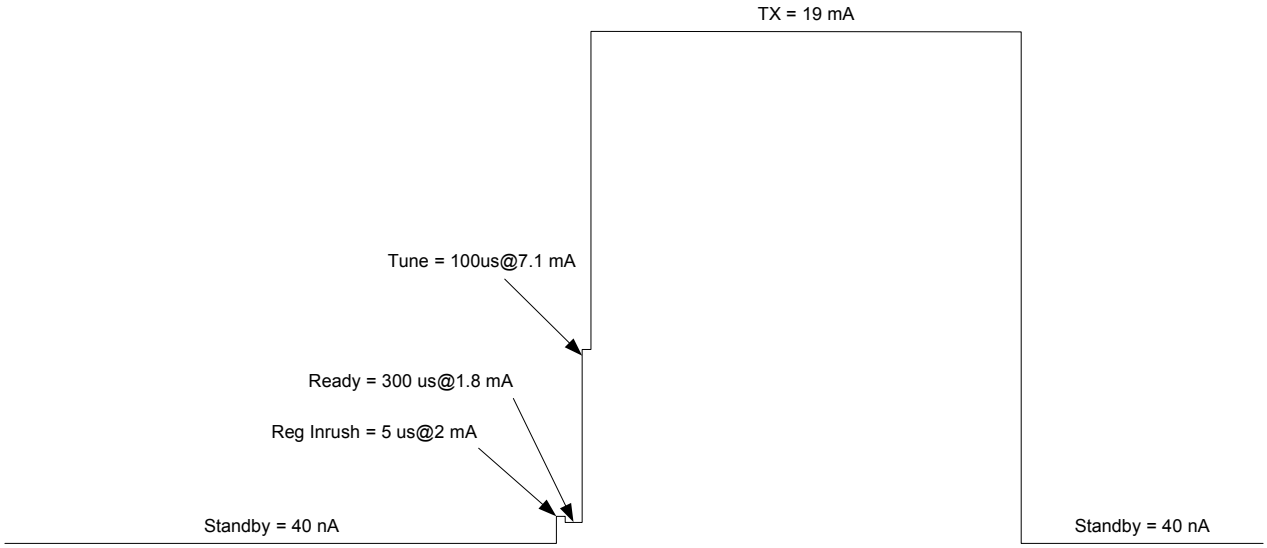

Figure 15. Start-Up Timing and Current Consumption using Standby State

5.2.1. Shutdown State

The shutdown state is the lowest current consumption state of the device and is entered by driving SDN (Pin 2) high. In this state, all register contents are lost and there is no SPI access. To exit this mode, drive SDN low. The device will then initiate a power on reset (POR) along with internal calibrations. Once this POR period is complete, the POWER_UP command is required to initialize the radio and the configuration can then be loaded into the device. The SDN pin must be held high for at least 10 µs before driving it low again to insure the POR can be executed correctly. The shutdown state can be used to fully reset the part. If POR timing and voltage requirements cannot be met, it is highly recommended that SDN be controlled using the host processor rather than tying it to GND on the board.

5.2.2. Standby State

The standby state has similar current consumption to the shutdown state but retains all register values, allowing for a much faster response time. Because of these benefits, most applications will want to use standby mode rather than shutdown. The standby state is entered by using the CHANGE_STATE API command. While in this state, the SPI is accessible but any SPI event will automatically transition the chip to the SPI active state. After the SPI event, the host will need to re-command the device to standby mode.

5.2.3. SPI Active State

The SPI active state enables the device to process any SPI events, such as API commands. In this state, the SPI and boot up oscillator are enabled. The SPI active state is entered by using the CHANGE_STATE command or automatically through an SPI event while in standby mode. If the SPI active state was entered automatically from standby mode, a CHANGE_STATE command will be needed to return the device to standby mode.

5.2.4. Ready State

Ready state is designed to give a fast transition time to TX or RX state with minimized current consumption. In this mode the crystal oscillator remains enabled to minimize the transition time. Ready state can be entered using the CHANGE_STATE command.

5.2.5. Power on Reset

A Power On Reset (POR) sequence is used to boot the device up from a fully off or shutdown state. To execute this process, VDD must ramp within 1 ms and must remain applied to the device for at least 10 ms. If VDD is removed, then it must stay below 0.15 V for at least 10 ms before being applied again. Refer to Figure 16 and Table 13 for details.

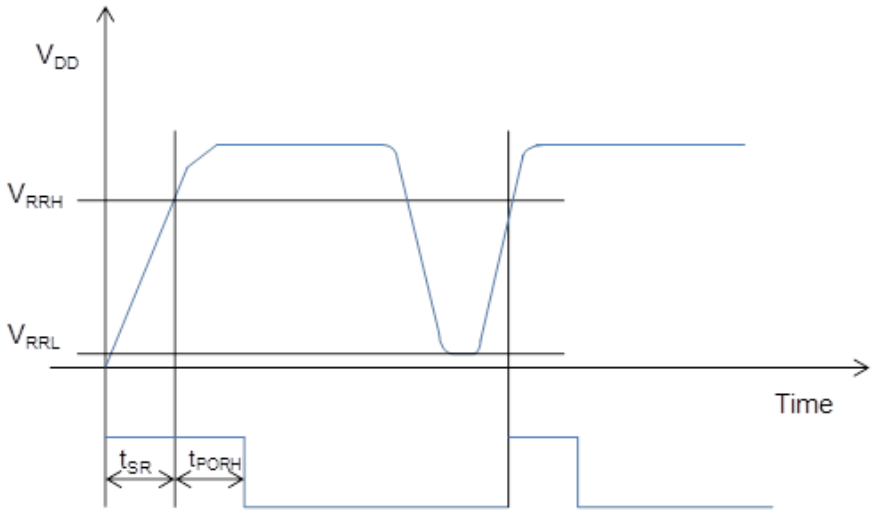

Figure 16. POR Timing Diagram

Table 13. POR Timing

Variable	Description	Min	Typ	Max	Units
t_{PORH}	High time for VDD to fully settle POR circuit.	10			ms
t_{PORL}	Low time for VDD to enable POR.	10			ms
V_{RRH}	Voltage for successful POR.	90%*Vdd			V
V_{RRL}	Starting Voltage for successful POR.	0		150	mV
t_{SR}	Slew rate of VDD for successful POR.			1	ms

5.2.6. TX State

The TX state is used whenever the device is required to transmit data. It is entered using either the START_TX or CHANGE_STATE command. With the START_TX command, the next state can be defined to insure optimal timing. When either command is sent to enter TX state, an internal sequencer automatically takes care of all actions required to move between states with no additional user commands needed. Examples of the timing of this transition can be seen in Figure 14 and Figure 15. The specific sequencer controlled events that take place during this time can include enable internal LDOs, start up crystal oscillator, enable PLL, calibrate VCO/PLL, active power amplifier, and transmit packet.

Figure 17 shows an example of the commands and timing for the START_TX command. CTS will go high as soon as the sequencer puts the part into TX state. As the sequencer is stepping through the events listed above, CTS will be low and no new commands or property changes are allowed. If the nIRQ is used to monitor the current state, there will be a slight delay caused by the internal hardware from when the event actually occurs to when the transition occurs on the nIRQ. The time from entering TX state to when the nIRQ will transition is 13 µs. If a GPIO is programmed for TX state or used as control for a transmit/receive switch (TR switch), there is no delay.

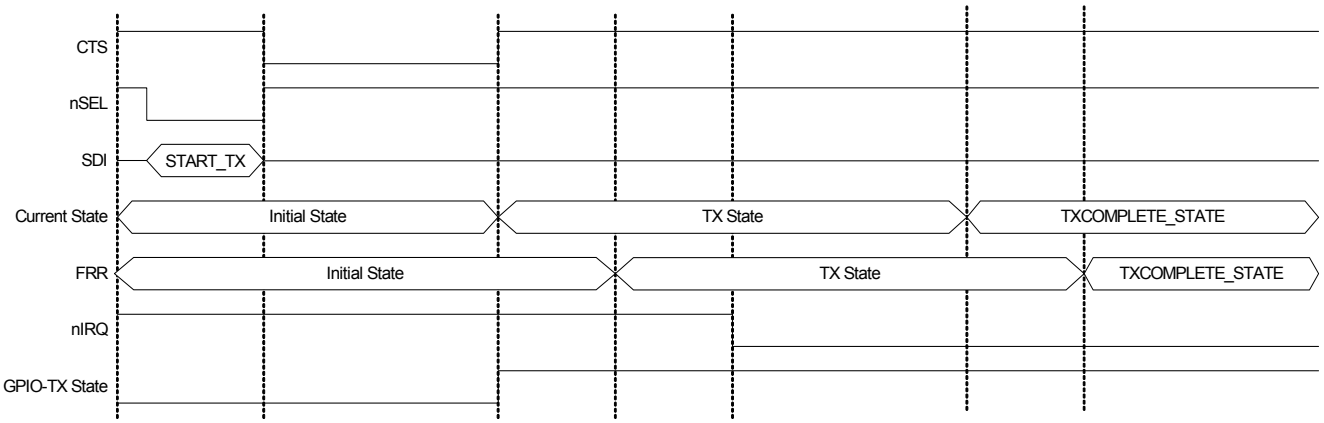

Figure 17. START_TX Commands and Timing

5.2.7. RX State

The RX state is used whenever the device is required to receive data. It is entered using either the START_RX or CHANGE_STATE commands. With the START_RX command, the next state can be defined to insure optimal timing. When either command is sent to enter RX state, an internal sequencer automatically takes care of all actions required to move between states with no additional user commands needed. The sequencer controlled events can include enable the digital and analog LDOs, start up the crystal oscillator, enable PLL, calibrate VCO, enable receiver circuits, and enable receive mode. The device will also automatically set up all receiver features such as packet handling based upon the initial configuration of the device.

5.3. Interrupts

The Si4x55 is capable of generating an interrupt signal when certain events occur. The chip notifies the microcontroller that an interrupt event has occurred by setting the nIRQ output pin LOW = 0. This interrupt signal will be generated when any one (or more) of the interrupt events occur. The nIRQ pin will remain low until the microcontroller reads the Interrupt Status Registers. The nIRQ output signal will then be reset until the next change in status is detected.

The interrupt sources are grouped into three categories: packet handler, chip status, and modem. The individual interrupts in these groups can be enabled/disabled in the interrupt property registers, 0x0101, 0x0102, and 0x0103. An interrupt must be enabled for it to trigger an event on the nIRQ pin. The interrupt group must be enabled as well as the individual interrupts in API property 0x0100.

When an interrupt event occurs and the nIRQ pin is low, the interrupts are read and cleared using the GET_INT_STATUS command. By default all interrupts will be cleared once read. The instantaneous status of a specific function may be read if the specific interrupt is enabled or disabled. The status results are provided after the interrupts and can be read with the same commands as the interrupts. The status bits will give the current state of the function whether the interrupt is enabled or not. The following is a list of possible interrupts:

- Chip status
- Modem status
- Packet handler status
- Packet sent
- Packet received
- CRC error
- Invalid preamble detected
- Invalid sync detected
- Preamble detected
- Sync detected
- State change
- Command error
- Chip ready
- TX FIFO almost empty
- RX FIFO almost full
- RSSI interrupt

5.4. GPIO

Four General Purpose IO (GPIO) pins are available for use in the application. The GPIOs are configured using the GPIO_PIN_CFG command. GPIO pins 0 and 1 should be used for active signals such as data or clock. GPIO pins 2 and 3 have more susceptibility to generating spurious components in the synthesizer than pins 0 and 1. The drive strength of the GPIO's can be adjusted with the GEN_CONFIG parameter in the GPIO_PIN_CFG command. By default, the drive strength is set to the minimum. The default configuration and the state of the GPIO during shutdown are shown in Table 14. For a complete list of the GPIO options, please refer to the EZRadio API documentation zip file available from www.silabs.com.

Table 14. GPIOs

Pin	SDN State	POR Default
GPIO0	0	POR
GPIO1	0	CTS
GPIO2	0	POR
GPIO3	0	POR
nIRQ	Resistive V_{DD} pull-up	nIRQ
SDO	Resistive V_{DD} pull-up	SDO
SDI	High Z	SDI
SCLK	High Z	SCLK
NSEL	High Z	NSEL

6. Data Handling and Packet Handler

6.1. RX and TX FIFOs

Two 64-byte FIFOs are integrated into the chip, one for RX and one for TX. Writing to command register 66h loads data into the TX FIFO and reading from command register 77h reads data from the RX FIFO. For packet lengths greater than 64 bytes, RX_FIFO_ALMOST_FULL and TX_FIFO_ALMOST_EMPTY status bits and interrupts can be used to manage the FIFO. The threshold value for these can be configured via the WDS radio configuration application GUI. The maximum payload length supported in packet handler mode is 255 bytes.

6.2. Packet Handler

The Si4x55 includes integrated packet handler features such as preamble and sync word detection as well as CRC calculation. This allows the chip to qualify and synchronize with legitimate transmissions independent of the microcontroller. These features can be enabled using the RCA. In this setup, the preamble and sync word length can be modified and the sync word pattern can be selected. If the preamble is greater than or equal to 4 bytes, the device uses the preamble detection circuit with a 2-byte detection threshold. If the preamble is less than 32 bits, then at least two bytes of sync word are required plus at least one byte of 0101 pattern (3 bytes total). In this case, preamble detection is skipped, and only sync word detection is used. For any combination of preamble and sync word less than three bytes, the device will use direct mode. The general packet structure is shown in Figure 18.

The EZConfig setup also provides the option to select a variable packet length. With this setting, the receiver is not required to know the packet length ahead of time. The transmitter sends the length of the packet immediately after the sync word. The packet structure for variable length packets is shown in Figure 19.

Preamble	Sync Word	Data	CRC
0 – 255 Bytes	1 – 4 Bytes	1 – 255 Bytes	2 Bytes

Figure 18. Packet Structure for Fixed Packet Length

Preamble	Sync Word	Length	Data	CRC
0 – 255 Bytes	1 – 4 Bytes	1 Byte	1 – 255 Bytes	2 Bytes

Figure 19. Packet Structure for Variable Packet Length

6.3. Direct Mode

In direct mode, the packet handler (including FIFO) is bypassed, and the host MCU must feed the data stream to the device in TX mode and read out the data stream in RX mode via GPIOs. The host MCU will process the data and perform packet handler functions. This is commonly used to support legacy implementations where host MCU software exists or to support non-standard packet structures. Some examples are packets with non 1010 preamble pattern, no preamble or sync word, or sync word with no edge transitions. WDS provides example projects to support both packet handler and direct modes.

7. Pin Descriptions

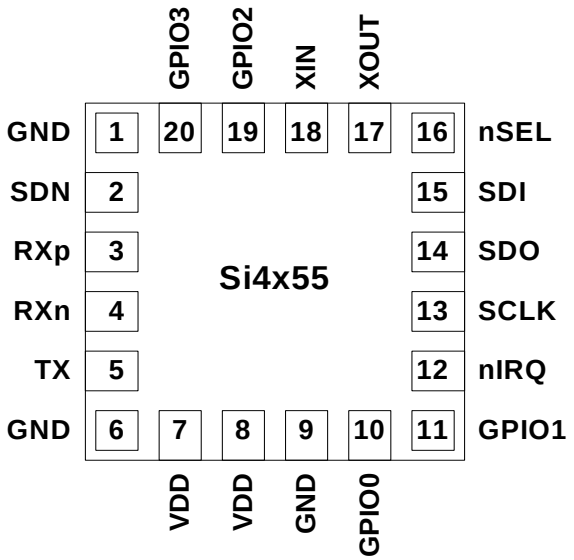

Pin	Pin Name	I/O	Description
1	GND	GND	Ground
2	SDN	I	Shutdown (0 – V_{DD} V) – SDN=1, part will be in shutdown mode and contents of all registers are lost. SDN=0, all other modes
3	RXp	I	Si4455: Differential RF receiver input Si4055: No Connect Si4355: Differential RF receiver input
4	RXn	I	Si4455: Differential RF receiver input Si4055: No Connect Si4355: Differential RF receiver input
5	TX	O	Si4455: Transmit RF output Si4055: Transmit RF output Si4355: No Connect
6	GND	GND	Ground
7	V_{DD}	V_{DD}	Supply voltage
8	V_{DD}	V_{DD}	Supply voltage
9	GND	GND	Ground
10	GPIO0	I/O	General Purpose Digital I/O
11	GPIO1	I/O	General Purpose Digital I/O
12	nIRQ	O	Interrupt Status Output – nIRQ = 0, interrupt event has occurred. Read interrupt status for event details
13	SCLK	I	Serial Clock Input (0 – V_{DD} V): Provides serial data clock for 4-line serial data bus
14	SDO	O	Serial Data Output (0 – V_{DD} V): Provides serial data readback function of internal control registers
15	SDI	I	Serial Data Input (0 – V_{DD} V): Serial data stream input for 4-line serial data bus
16	nSEL	I	Serial Interface Select Input (0 – V_{DD} V): Provides select/enable function for 4-line serial data bus

Pin	Pin Name	I/O	Description
17	XOUT	O	Crystal Oscillator Output
18	XIN	I	Crystal Oscillator Input: No dc bias required, but if used, should be set to 0.7 V. Also used for external TCXO input.
19	GPIO2	I/O	General Purpose Digital I/O
20	GPIO3	I/O	General Purpose Digital I/O
PKG	PADDLE_GND	GND	The exposed metal paddle on the bottom of the package supplies the RF and circuit ground(s) for the entire chip. It is very important that a good solder connection is made between this exposed metal paddle and the ground plane of the underlying PCB.

8. Ordering Information

Part Number*	Description	Package Type	Operating Temperature
Si4455-C2A-GM	EZRadio Transceiver	3x3 QFN-20 Pb-free	–40 to 85 °C
Si4355-C2A-GM	EZRadio Receiver	3x3 QFN-20 Pb-free	–40 to 85 °C
Si4055-C2A-GM	EZRadio Transmitter	3x3 QFN-20 Pb-free	–40 to 85 °C
***Note:** Add an “R” at the end of the device part number to denote tape and reel option.			

9. Package Outline

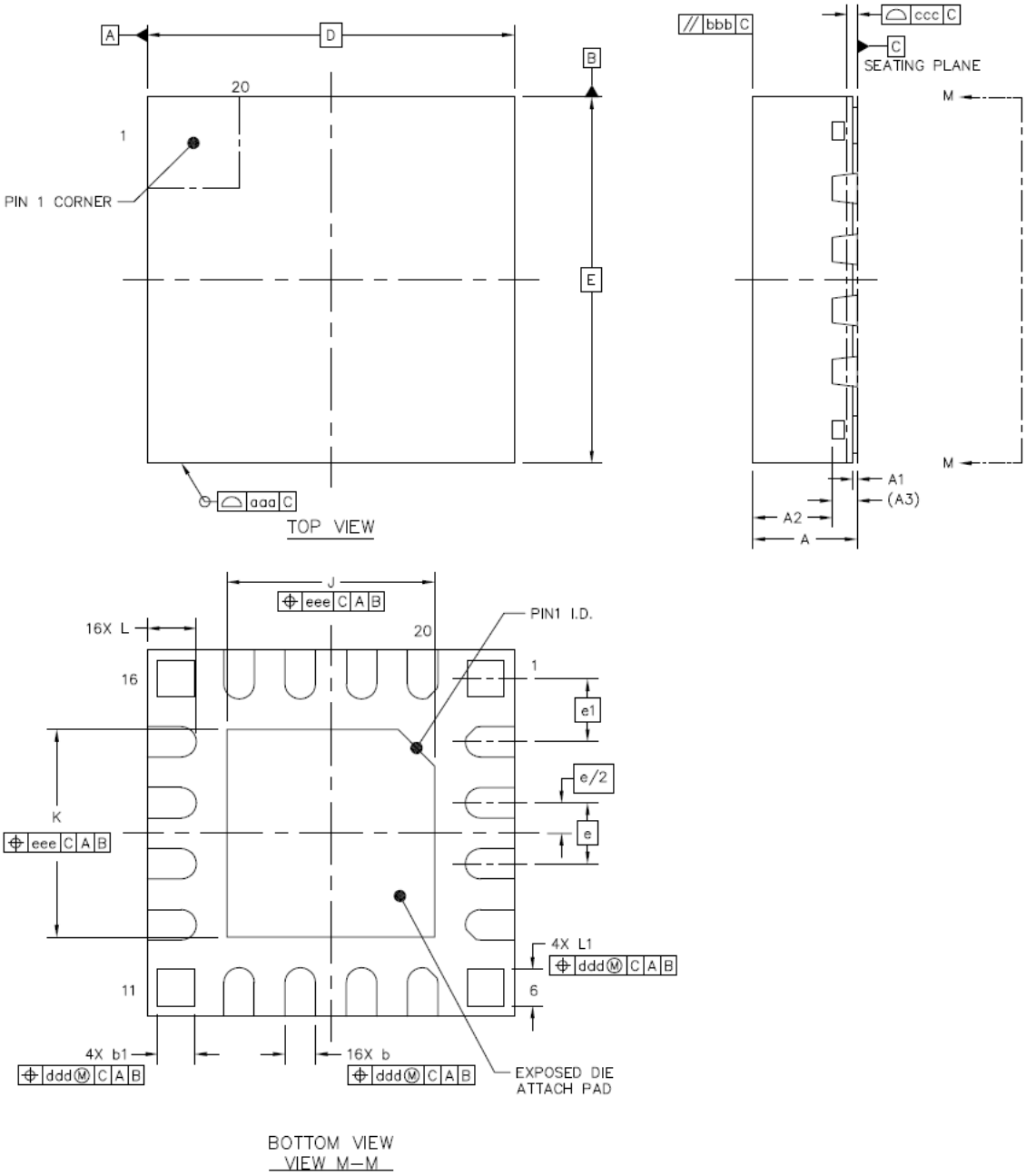

Figure 20. 20-pin QFN Package

Table 15. Package Diagram Dimensions

Dimension	Min	Nom	Max
A	0.80	0.85	0.90
A1	0.00	0.035	0.05
A2	—	0.65	—
A3	0.203 REF		
b	0.20	0.25	0.30
b1	0.25	0.30	0.35
D	3.00 BSC.		
E	3.00 BSC.		
e	0.50 BSC.		
e1	0.515 BSC.		
J	1.60	1.70	1.80
K	1.60	1.70	1.80
L	0.35	0.40	0.45
L1	0.25	0.30	0.35
aaa	0.10		
bbb	0.10		
ccc	0.08		
ddd	0.10		
eee	0.10		

Notes:

1. All dimensions shown are in millimeters (mm) unless otherwise noted.
2. Dimensioning and Tolerancing per ANSI Y14.5M-1994.
3. The drawing complies with JEDEC MO-220.
4. Recommended card reflow profile is per the JEDEC/IPC J-STD-020 specification for Small Body Components.

10. PCB Land Pattern

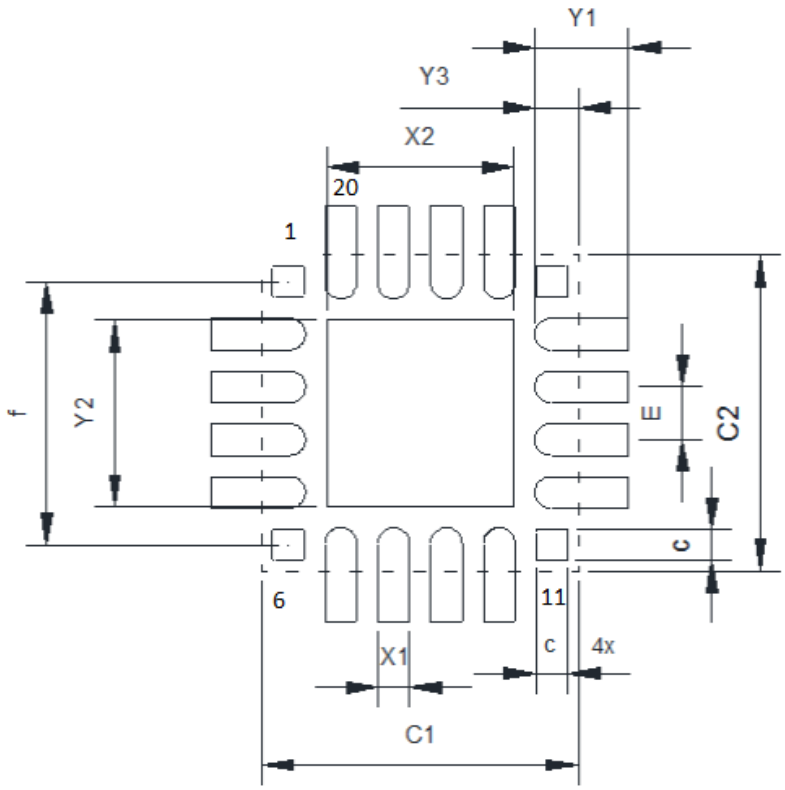

Figure 21. 20-pin QFN PCB Land Pattern

Table 16. PCB Land Pattern Dimensions

Dimension	MIN	MAX
C1	3.00	
C2	3.00	
E	0.50 REF	
X1	0.25	0.35
X2	1.65	1.75
Y1	0.85	0.95
Y2	1.65	1.75
Y3	0.37	0.47
f	2.40 REF	
c	0.25	0.35
Note: All dimensions shown are in millimeters (mm) unless otherwise noted.		

11. Top Marking

11.1. Si4x55 Top Marking

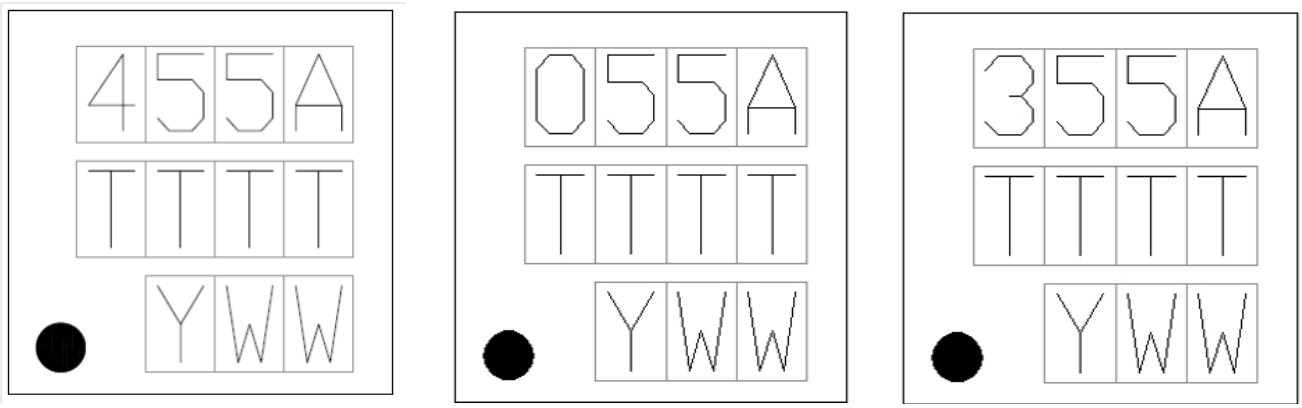

Figure 22. Si4x55 Top Marking

11.2. Top Marking Explanation

Mark Method:	Laser	
Line 1 Marking:	Part Number	455A = Si4455-C2A 055A = Si4055-C2A 355A = Si4355-C2A
	Firmware Revision	A = C2A
Line 2 Marking:	TTTT = Trace Code	Internal tracking number
Line 3 Marking:	Circle = 0.5 mm Diameter (Bottom-Left Justified)	
	Y = Year WW = Workweek	Assigned by the Assembly House. Corresponds to the last significant digit of the year and work week of the mold date.

Simplicity Studio

One-click access to MCU tools, documentation, software, source code libraries & more. Available for Windows, Mac and Linux!

www.silabs.com/simplicity

MCU Portfolio
www.silabs.com/mcu

SW/HW
www.silabs.com/simplicity

Quality
www.silabs.com/quality

Support and Community
community.silabs.com

Disclaimer
Silicon Laboratories intends to provide customers with the latest, accurate, and in-depth documentation of all peripherals and modules available for system and software implementers using or intending to use the Silicon Laboratories products. Characterization data, available modules and peripherals, memory sizes and memory addresses refer to each specific device, and "Typical" parameters provided can and do vary in different applications. Application examples described herein are for illustrative purposes only. Silicon Laboratories reserves the right to make changes without further notice and limitation to product information, specifications, and descriptions herein, and does not give warranties as to the accuracy or completeness of the included information. Silicon Laboratories shall have no liability for the consequences of use of the information supplied herein. This document does not imply or express copyright licenses granted hereunder to design or fabricate any integrated circuits. The products must not be used within any Life Support System without the specific written consent of Silicon Laboratories. A "Life Support System" is any product or system intended to support or sustain life and/or health, which, if it fails, can be reasonably expected to result in significant personal injury or death. Silicon Laboratories products are generally not intended for military applications. Silicon Laboratories products shall under no circumstances be used in weapons of mass destruction including (but not limited to) nuclear, biological or chemical weapons, or missiles capable of delivering such weapons.

Trademark Information
Silicon Laboratories Inc., Silicon Laboratories, Silicon Labs, SiLabs and the Silicon Labs logo, CMEMS®, EFM, EFM32, EFR, Energy Micro, Energy Micro logo and combinations thereof, "the world's most energy friendly microcontrollers", Ember®, EZLink®, EZMac®, EZRadio®, EZRadioPRO®, DSPLL®, ISOmodem ®, Precision32®, ProSLIC®, SiPHY®, USBXpress® and others are trademarks or registered trademarks of Silicon Laboratories Inc. ARM, CORTEX, Cortex-M3 and THUMB are trademarks or registered trademarks of ARM Holdings. Keil is a registered trademark of ARM Limited. All other products or brand names mentioned herein are trademarks of their respective holders.

Silicon Laboratories Inc.
400 West Cesar Chavez
Austin, TX 78701
USA

http://www.silabs.com