HAMMOND MANUFACTURING

Quality Products. Service Excellence.

Low Voltage PCB Mount - Low Profile *162-164 Series*

Features

- 20 output voltages to choose from (5 - 120VAC R.M.S.)
- Six VA size models available from - 1.1 to 36VA
- Both series operate on 50/60 Hz current
- Low profile, split bobbin design.
- Dual winding secondaries, non-concentrically wound
- Units are designed so that all windings must be used
- Low primary to secondary coupling - no electrostatic shield required.
- Choice of economical single primary 115V (164 series) or universal dual primary 115/230V (162 series) - either model 50/60 Hz operation.
- High insulation - Hipot of 2,500V RMS.
- Class B insulation - 130 degrees C.
- No mounting hardware required on 1.1 and 2.4 VA sizes, two hole mounting on 6, 12 and 20VA sizes, four hole mounting on 36VA size (mounting screws not provided). P.C. board mount with industry standard pin spacing.
- c UL us recognized

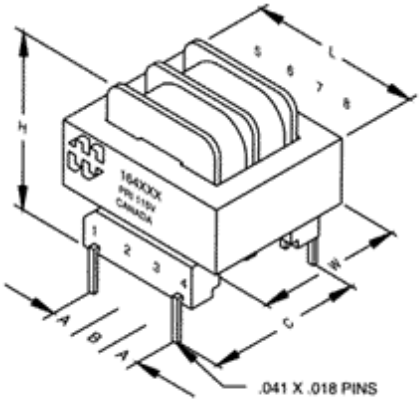

Single Primary 164 Series

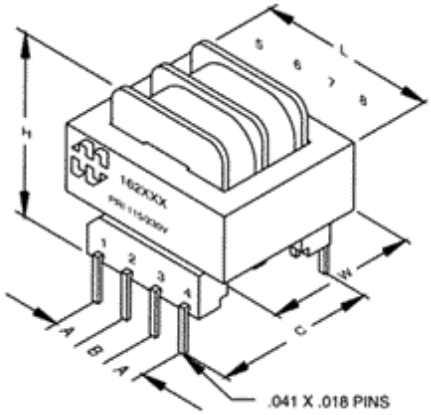

Dual Primary 162 Series

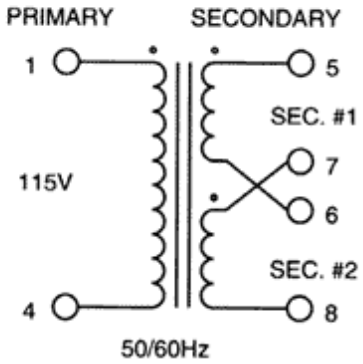

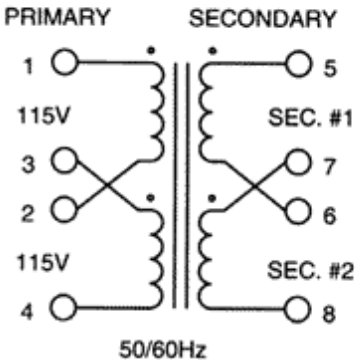

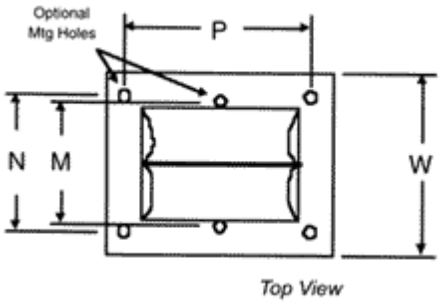

Part No Single Primary 115V	Part No Dual Primary 115/230V	Size VA	Secondary (RMS) Series	Parallel
164D10	**162D10**	1.1	10V C.T. @ .11A	5V @ .22A
164E10	**162E10**	2.4	10V C.T. @ .25A	5V @ .5A
164F10	**162F10**	6	10V C.T. @ .6A	5V @ 1.2A
164G10	**162G10**	12	10V C.T. @ 1.2A	5V @ 2.4A
164H10	**162H10**	20	10V C.T. @ 2A	5V @ 4.0A
164J10	**162J10**	36	10V C.T. @ 3.6A	5V @ 7.2A
164D12	**162D12**	1.1	12.6V C.T. @ .09A	6.3V @ .18A
164E12	**162E12**	2.4	12.6V C.T. @ .2A	6.3V @ .4A
164F12	**162F12**	6	12.6V C.T. @ .5A	6.3V @ 1.0A
164G12	**162G12**	12	12.6V C.T. @ 1.0A	6.3V @ 2.0A
164H12	**162H12**	20	12.6V C.T. @ 1.6A	6.3V @ 3.2A
164J12	**162J12**	36	12.6V C.T. @ 2.85A	6.3V @ 5.7A
164D16	**162D16**	1.1	16V C.T. @ .07A	8V @ .14A
164E16	**162E16**	2.4	16V C.T. @ .15A	8V @ .3A
164F16	**162F16**	6	16V C.T. @ .4A	8V @ .8A
164G16	**162G16**	12	16V C.T. @ .8A	8V @ 1.6A
164H16	**162H16**	20	16V C.T. @ 1.25A	8V @ 2.5A
164J16	**162J16**	36	16V C.T. @ 2.25A	8V @ 4.5A
164D20	**162D20**	1.1	20V C.T. @ .055A	10V @ .11A
164E20	**162E20**	2.4	20V C.T. @ .12A	10V @ .24A
164F20	**162F20**	6	20V C.T. @ .3A	10V @ .6A
164G20	**162G20**	12	20V C.T. @ .6A	10V @ 1.2A
164H20	**162H20**	20	20V C.T. @ 1A	10V @ 2.0A
164J20	**162J20**	36	20V C.T. @ 1.8A	10V @ 3.6A
164D24	**162D24**	1.1	24V C.T. @ .045A	12V @ .09A
164E24	**162E24**	2.4	24V C.T. @ .1A	12V @ .2A

Part No Single Primary 115V	Part No Dual Primary 115/230V	Size VA	Secondary (RMS) Series	Parallel
164F24	**162F24**	6	24V C.T. @ .25A	12V @ .5A
164G24	**162G24**	12	24V C.T. @ .5A	12V @ 1.0A
164H24	**162H24**	20	24V C.T. @ .8A	12V @ 1.6A
164J24	**162J24**	36	24V C.T. @ 1.5A	12V @ 3.0A
164D28	**162D28**	1.1	28V C.T. @ .04A	14V @ .08A
164E28	**162E28**	2.4	28V C.T. @ .085A	14V @ .17A
164F28	**162F28**	6	28V C.T. @ .2A	14V @ .4A
164G28	**162G28**	12	28V C.T. @ .42A	14V @ .84A
164H28	**162H28**	20	28V C.T. @ .7A	14V @ 1.4A
164J28	**162J28**	36	28V C.T. @ 1.3A	14V @ 2.6A
164D36	**162D36**	1.1	36V C.T. @ .03A	18V @ .06A
164E36	**162E36**	2.4	36V C.T. @ .065A	18V @ .13A
164F36	**162F36**	6	36V C.T. @ .17A	18V @ .34A
164G36	**162G36**	12	36V C.T. @ .35A	18V @ . 7A
164H36	**162H36**	20	36V C.T. @ .55A	18V @ 1.1A
164J36	**162J36**	36	36V C.T. @ 1A	18V @ 2.0A
164D48	**162D48**	1.1	48V C.T. @ .023A	24V @ .046A
164E48	**162E48**	2.4	48V C.T. @ .05A	24V @ .1A
164F48	**162F48**	6	48V C.T. @ .125A	24V @ .25A
164G48	**162G48**	12	48V C.T. @ .25A	24V @ .5A
164H48	**162H48**	20	48V C.T. @ .4A	24V @ .8A
164J48	**162J48**	36	48V C.T. @ .75A	24V @ 1.5A
164D56	**162D56**	1.1	56V C.T. @ .02A	28V @ .04A
164E56	**162E56**	2.4	56V C.T. @ .045A	28V @ .09A
164F56	**162F56**	6	56V C.T. @ .11A	28V @ .22A
164G56	**162G56**	12	56V C.T. @ .22A	28V @ .44A
164H56	**162H56**	20	56V C.T. @ .35A	28V @ .7A
164J56	**162J56**	36	56V C.T. @ .65A	28V @ 1.3A
164D120	**162D120**	1.1	120V C.T. @ .01A	60V @ .02A
164E120	**162E120**	2.4	120V C.T. @ .02A	60V @ .04A
164F120	**162F120**	6	120V C.T. @ .05A	60V @ .1A
164G120	**162G120**	12	120V C.T. @ .1A	60V @ .2A
164H120	**162H120**	20	120V C.T. @ .16A	60V @ .32A
164J120	**162J120**	36	120V C.T. @ .3A	60V @ .6A

Mechanical & Schematic Data

(VA) Size	Part Number Letter	Dimensions L	W	H	A	B	C	M	N	P	Mounting Screw	Weight lbs.
1.1	D	1.38	1.13	15/16	0.25	0.25	1.2	-	-	-	-	0.17
2.4	E	1.38	1.13	1.19	0.25	0.25	1.2	-	-	-	-	0.25
6	F	1.63	1.31	1.31	0.25	0.35	1.28	1.06	-	-	#4	0.44
12	G	1.88	1.56	1.50	0.30	0.40	1.41	1.25	-	-	#4	0.7
20	H	2.25	1.88	1.44	0.30	0.40	1.6	1.5	-	-	#4	0.8
36	J	2.63	2.19	1.56	0.40	0.40	1.85	-	1.75	2.19	#6	1.1

Data subject to change without notice

© 2020. Hammond Manufacturing Ltd. All rights reserved.