Honeywell
THE POWER OF **CONNECTED**

Heavy Duty Pressure Transducers

MLH Series, 6 bar to 550 bar | 50 psi to 8000 psi

32328895
Issue B

Datasheet

DESCRIPTION

The MLH Series Heavy Duty Pressure Transducers combine Application Specific Integrated Circuit (ASIC) technology with a media-isolated, metal diaphragm design. This digitally compensated transducer offers value and performance, making it a suitable pressure sensing solution for demanding applications. Industry standard electrical connectors and pressure ports are offered for enhanced reliability and user flexibility.

The MLH Series has six standard output options:

- Ratiometric: 0.5 Vdc to 4.5 Vdc from 5 Vdc excitation
- Current: 4 mA to 20 mA
- Regulated: 1 Vdc to 6 Vdc
- Regulated: 0.25 Vdc to 10.25 Vdc
- Regulated: 0.5 Vdc to 4.5 Vdc
- Regulated: 1 Vdc to 5 Vdc

VALUE TO CUSTOMERS

- Total Error Band (TEB) as low as 2 %FSS from -40°C to 125°C: Provides indication of the transducer's true measurement performance over a specified temperature range; small error promotes system uptime and efficiency. (See Figure 1.)
- All metal wetted parts allow for potential use in a wide variety of fluid applications.
- No internal elastomeric seals eliminate O-ring compatibility issues.
- Amplified outputs reduce the need to purchase external amplifiers.
- Input reverse voltage protection guards against mis-wiring.
- Less than 2 ms response time provides more accurate, high speed measurement.

FEATURES

- Pressure range of 6 bar to 550 bar | 50 psi to 8,000 psi
- ±0.25% full scale accuracy Best Fit Straight Line (BFSL)
- Total Error Band (TEB) as low as 2 %FSS
- Compensated and operating temperature range of -40°C to 125°C [-40°F to 257°F] (see Table 4)
- Less than 2 ms response time
- Fully temperature compensated, calibrated and amplified
- Rated IP65 or better for protection from most harsh environments
- RoHS, CE, UL Component Recognition for USA and Canada: File No. E258956

POTENTIAL APPLICATIONS

- Industrial: Compressors, cylinder tank pressure, HVAC, hydraulics, oil and gas, refrigeration, water distribution
- Transportation: Multiple applications including braking and alternative fuels
- Medical: Anesthesia delivery machines, blood analyzers, chemistry analyzers, gas chromatography, oxygen concentrators, and ventilators

PORTFOLIO

The MLH Series joins the PX3 Series, PX2 Series, SPT Series heavy duty pressure transducers and the 13 mm Series and 19 mm Series heavy duty pressure transducers.

Figure 1. Total Error Band (TEB) Definition

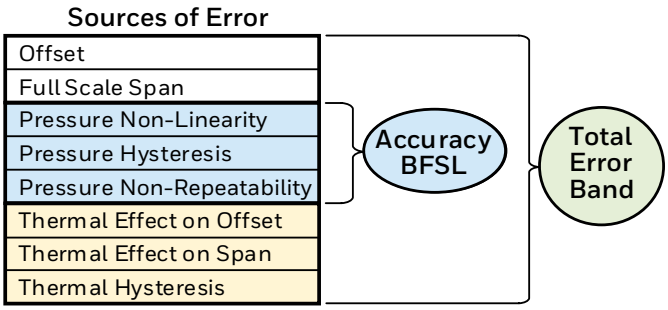

Heavy Duty Pressure Transducers

MLH Series, 6 bar to 550 bar | 50 psi to 8000 psi

Table 1. Pressure Range Specifications[1] (At 25°C [77°F] and at rated excitation unless otherwise specified.)

bar			psi		
Operating Pressure	**Proof Pressure**	**Burst Pressure**	**Operating Pressure**	**Proof Pressure**	**Burst Pressure[2]**
6	18	60	50	150	500
10	30	100	100	300	1000
16	48	160	150	450	1500
25	75	250	200	600	2000
40	80	400	250	750	2500
60	120	600	300	900	3000
100	200	1000	500	1500	5000
160	320	1600	1000	2000	10000
250	500	2068	2000	4000	20000
350	700	2068	3000	6000	30000
500	750	2068	5000	7500	30000
550	825	2068	8000	12000	30000

[1] Comparable metric units follow same proof and burst specifications.
[2] Bonded washer seal used on G 1/8 (DIN 3852-2) port is limited to 25000 psi burst.

Table 2. Electrical Specifications (At 25°C [77°F] unless otherwise noted.)

Characteristic	Output Signal					
	Ratiometric A	**Current B**	**Regulated C**	**Regulated D**	**Regulated E**	**Regulated G**
Zero output	0.5 Vdc	4 mA	1 Vdc	0.25 Vdc	0.5 Vdc	1 Vdc
Full scale span (FSS)	4 Vdc (0.5 Vdc to 4.5 Vdc)	16 mA (4 mA to 20 mA)	5 Vdc (1 Vdc to 6 Vdc)	10 Vdc (0.25 Vdc to 10.25 Vdc)	4 Vdc (0.5 Vdc to 4.5 Vdc)	4 Vdc (1 Vdc to 5 Vdc)
Excitation	5 Vdc (6 Vdc max.)[1]	9.5 Vdc to 30 Vdc[2]	8 Vdc to 30 Vdc[2]	14 Vdc to 30 Vdc[2]	7 Vdc to 30 Vdc[2]	8 Vdc to 30 Vdc[2]
Supply current	4 mA typ., 8 mA max.	N/A	5 mA typ., 17 mA max.	5 mA typ., 17 mA max.	5 mA typ., 17 mA max.	5 mA typ., 17 mA max.
Source (nominal)	1 mA	N/A	1 mA	1 mA	1 mA	1 mA
Sink (nominal	1 mA at zero output	N/A	1 mA at zero output	1 mA at zero output	1 mA at zero output	1 mA at zero output
Supply rejection ratio	90 dB	90 dB	90 dB	90 dB	90 dB	90 dB
Output impedance	25 Ohm max.	N/A	25 Ohm max.	25 Ohm max.	25 Ohm max.	25 Ohm max.

[1] Maintains ratiometricity at 5 ±0.25 Vdc excitation. Product can tolerate 6 Vdc excitation without damage.
[2] See Figures 2 and 3 for more information regarding maximum excitation voltage vs. operating temperature.

Table 3. Pressure Reference Types

Pressure Reference	Description
Sealed gage[1]	Output is proportional to the difference between applied pressure and a built-in fixed reference to 1 atmA, where the minimum operating pressure is set to 14.7 psiA (1 atmA).
Vented gage (relative) [2]	Transducer measures pressure relative to ambient pressure. Output is proportional to the difference between applied pressure and atmospheric (ambient) pressure, where the minimum operating pressure is set to atmospheric pressure.

Table 4. Environmental and Mechanical Specifications (At 25°C [77°F] unless otherwise noted.)

Characteristic	Parameter
Material in contact with media: port diaphragm	 stainless steel 304L Haynes 214 alloy
Housing material	black plastic – Amodel AS-4133 HS – PPA
Weight (typical for Metri-Pack 150 and 1/8 NPT pressure port types)	57.0 g [2.0 oz]
Shock	100 g peak [11 ms]
Vibration	MIL-STD-810C, Figure 514.2-5, Curve AK, Table 514.2-V, Random Vibration Test (overall g rms = 20.7 min.)
Compensated and operating temperature range: 0.5 Vdc to 4.5 Vdc ratiometric output all regulated and 4 mA to 20 mA outputs	 -40°C to 125°C [-40°F to 257°F] -40°C to 125°C [-40°F to 257°F] (See Figures 2 and 3 for operating area details.)
Storage temperature range	-40°C to 125°C [-40°F to 257°F]
Approvals	RoHS, CE, UL Component Recognition for USA and Canada: File No. E258956

Table 5. Performance Specifications (At 25°C [77°F] unless otherwise noted.)

Characteristic	Parameter
Response time	<2 ms
Accuracy[1]: ≥100 psi ≤100 psi	 ±0.25 %FSS ±0.50 %FSS
Total Error Band[2]: Vented gage (relative): <300 psig ≥300 psig Sealed gage: without **L, M, P** electrical connector types: 100 psis to 299 psis (-40°C to 85°C [-40°F to 185°F]) 100 psis to 299 psis (>85°C to 125°C [>185°F to 257°F]) ≥300 psis (-40°C to 125°C [-40°F to 257°F]) with **L, M, P** electrical connector types: 100 psis to 299 psis (-40°C to 65°C [-40°F to 149°F]) 100 psis to 299 psis (>65°C to 125°C [>149°F to 257°F]) ≥300 psis (-40°C to 65°C [-40°F to 149°F]) ≥300 psis (>65°C to 125°C [>149°F to 257°F])	 ±3 %FSS ±2 %FSS ±3 %FSS ±10 %FSS ±2 %FSS ±10 %FSS ±15 %FSS ±5 %FSS ±15 %FSS

[1] Includes pressure non-linearity (BFSL), pressure hysteresis and pressure non-repeatability. Thermal errors are not included. (See Figure 1.)
[2] Includes offset error, full scale span error, pressure non-linearity (BFSL), pressure hysteresis, pressure non-repeatability, thermal effect on offset, thermal effect on span, and thermal hysteresis. (See Figure 1.)

Figure 2. Regulated Output Operating and Temperature Compensation

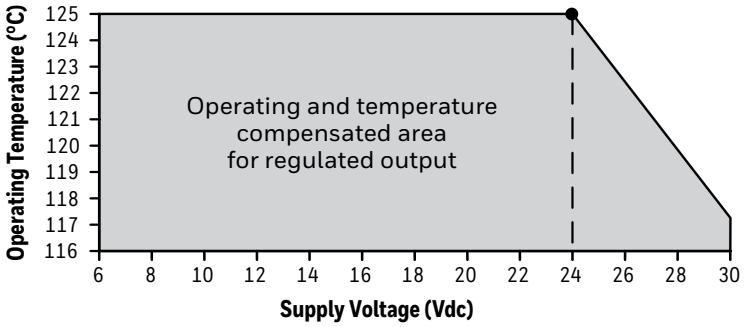

Note: The dot indicates the maximum operating temperature of 125°C [257°F] with a 24 V supply.

Figure 3. Current Output Operating and Temperature Compensation

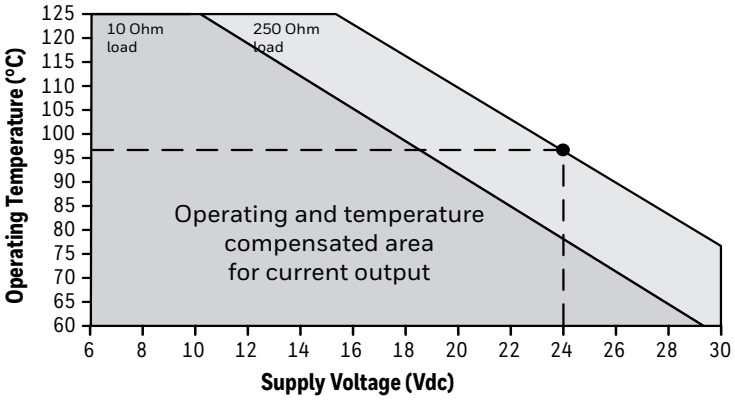

Note: The operating area is extended with a 250 Ohm resistor. Higher loads extend the operating area. The dot indicates the maximum operating temperature when using a 24 V supply and a 250 Ohm resistor.

CAUTION
PRODUCT DAMAGE DUE TO MECHANICAL ISSUES

- Ensure torque specifications are determined for the specific application. Values provided are for reference only. (Mating materials and thread sealants can result in significantly different torque values from one application to the next.)
- When using mating parts made of stainless steel, use a thread sealant with anti-seize properties to prevent thread galling. Ensure the sealant is rated for the application.
- Use appropriate tools (such as an open ended wrench or deep well socket) to install transducers.
- Always hand-start transducers into the hole to prevent cross threading and damage.
- Ensure that torque is not applied to the electrical connector.
- Ensure that the proper mating electrical connector with a seal is used to connect the transducer. Improper or damaged seals can compromise ingress protection, leading to short circuits.

Failure to comply with these instructions may result in product damage.

CAUTION
PRODUCT DAMAGE DUE TO PARTICULATES

- Ensure that a filter is used upstream of the transducer to keep media flow free of larger particulates and increased humidity. All MLH Series transducers are dead-ended devices; particulate accumulation and condensing moisture may affect transducer output.
- It is recommend that the transducer be positioned with the port facing downwards; any particulates in the system are less likely to enter and settle within the pressure transducer if it is in this position.
- Ensure that the media does not create a residue when dried. Build-up inside the transducer may affect transducer output; rinsing of a dead-ended transducer is potentially difficult and has limited effectiveness in removing residue.

Failure to comply with these instructions may result in product damage.

Heavy Duty Pressure Transducers

MLH Series, 6 bar to 550 bar | 50 psi to 8000 psi

Figure 4. Nomenclature and Order Guide

For example, MLH150PSB01B defines an MLH Series Heavy Duty Pressure Transducer, 150 psi pressure range, sealed gage pressure reference, Metri-Pack 150 electrical connector type, 1/4-18 NPT pressure port type, 4 mA to 20 mA output.

MLH 150 P S B 01 B

Series

MLH	Heavy Duty Pressure Transducer[1]

Pressure Range

bar		psi	
006	6	**050**	50
010	10	**100**	100
016	16	**150**	150
025	25	**200**	200
040	40	**250**	250
060	60	**300**	300
100	100	**500**	500
160	160	**01K**	1000
250	250	**02K**	2000
350	350	**03K**	3000
500	500	**05K**	5000
550	550	**08K**	8000

Unit

B	bar
P	psi

Pressure Reference

G	Vented gage (relative)
S	Sealed gage[2]

Electrical Connector Type

B	Metri-Pack 150[3]
C	Hirschmann
D	M12x1 (Brad Harrison micro)
G	DIN 43650-C, 8 mm male
H	AMP Superseal 1.5[4]
L	Cable harness, 1 meter cable length[3]
M	Cable harness, 3 meter cable length[33]
P	Flying leads
T	Deutsch DTM04-3P (integral)

Metri-Pack 150 mating connector[3]

Output Transfer Function

A	Ratiometric: 0.5 Vdc to 4.5 Vdc from 5 Vdc excitation
B	Current: 4 mA to 20 mA
C	Regulated: 1 Vdc to 6 Vdc
D	Regulated: 0.25 Vdc to 10.25 Vdc
E	Regulated: 0.5 Vdc to 4.5 Vdc
G	Regulated: 1 Vdc to 5 Vdc

Pressure Port Type

01	1/4-18 NPT (ANSI B1.20.1)	**54**	M10x1 with O-ring seal (ISO 6149-2)[5]
06	1/8-27 NPT (ANSI B1.20.1)	**55**	M12x1.5 with O-ring seal (ISO 6149-2)[5]
09	7/16-20 UNF 1/4 in 45° Flare Female Schrader with depressor	**56**	M14x1.5 with O-ring seal (ISO 6149-2)[5]
11	1/2-14 NPT (ANSI B1.20.1)	**57**	M16x1.5 with O-ring seal (ISO 6149-2)[5]
13	R 1/4-19 BSPT (ISO 7-1)	**58**	M18x1.5 with O-ring seal (ISO 6149-2)[5]
19	R 1/8-28 BSPT (ISO 7-1)	**59**	M20x1.5 with O-ring seal (ISO 6149-2)[5]
50	3/8-24 UNF with O-ring seal (SAE J1926-2)[5]	**60**	G1/8-28 BSPP with bonded washer (DIN 3852-2)[5,6]
51	7/16-20 UNF with O-ring seal (SAE J1926-2)[5]	**61**	G1/4-19 BSPP with bonded washer (DIN 3852-2)[5,6]
52	1/2-20 UNF with O-ring seal (SAE J1926-2)[5]	**62**	G1/8-28 BSPP with elastomeric seal (ISO 1179-2)[5]
53	9/16-18 UNF with O-ring seal (SAE J1926-2)[5]	**63**	G1/4-19 BSPP with elastomeric seal (ISO 1179-2)[5]

[1] Not all catalog listing combinations are available. Custom products are available. Please contact Honeywell.
[2] Sealed gage option is only available in pressure ranges at or above 8 bar | 100 psi.
[3] Metri-Pack 150 mating connectors with shielded cable and 22 AWG wire are available from Honeywell. Order part no. 3685301 for 1 m [3.2 ft] cable length and part no. 3685302 for 3 m [9.8 ft] cable length.
[4] Available with Output Transfer Function **A** only.
[5] Seal accessory is included with the sensor. Seal accessory materials and specifications are: O-ring (nitrile, durometer 90, temperature range -30°C to 125°C), bonded washer (steel outer ring with nitrile inner ring, temperature range -30°C to 125°C), elastomeric seal (nitrile, temperature range -30°C to 125°C).
[6] When using the bonded washer accessory supplied by Honeywell, the customer's female port connection design should follow DIN 3852-1: 2000-11 size large. If compliance to DIN 3852-1:2014-05 is required, contact Honeywell for alternate options.

Figure 5. Electrical Connector Type Mounting Dimensions (For reference only. mm/[in].)

"H" + "P" = total nominal product length

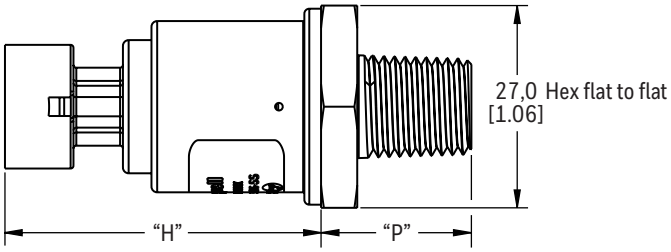

General product marking

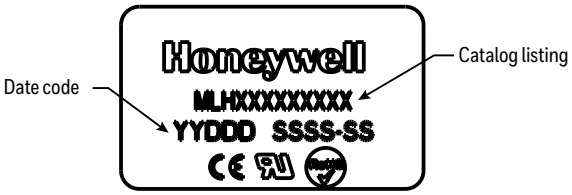

B Metri-Pack 150	C Hirschmann	D M12x1 (Brad Harrison micro)	G DIN 43650-C, 8 mm male
Connector: Delphi 12078088 **Mating connector:** Delphi 12110192 **IP rating[1]:** IP65 (all versions)	**Connector:** Hirschmann G series, 4-pole (small cubic connector) **Mating connector:** Hirschman G4WF or equivalent **IP rating[1]:** IP65 (all versions)	**Connector:** DS/EN 61076-2-101 (IEC 61076-2-101) **Mating connector:** 4 POS Type D **IP rating[1]:** IP65, IP67 (sealed gage versions), IP65 (vented gage versions)	**Connector:** DIN 43650C, 8 mm **Mating connector:** DIN 43650C, 8 mm **IP rating[1]:** IP65 (all versions)

Pin	Voltage Output (3-wire)	Current Output (2-wire)
A	+excitation	+excitation
B	common	no connection
C	output	-excitation (return)

Pin	Voltage Output (3-wire)	Current Output (2-wire)
1	no connection	no connection
2	output	no connection
3	common	-excitation (return)
4	+excitation	+excitation

Pin	Voltage Output (3-wire)	Current Output (2-wire)
1	+excitation	+excitation
2	common	-excitation (return)
3	output	no connection
4	no connection	no connection

Pin	Voltage Output (3-wire)	Current Output (2-wire)
1	+excitation	+excitation
2	common	-excitation (return)
3	no connenction	no connection
4	output	no connection

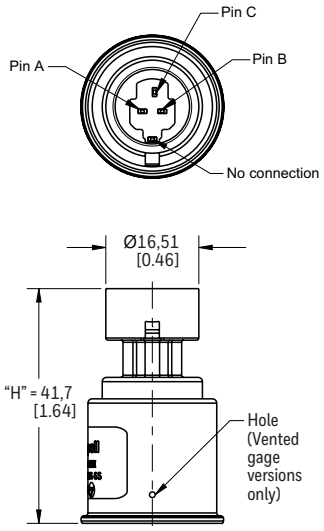

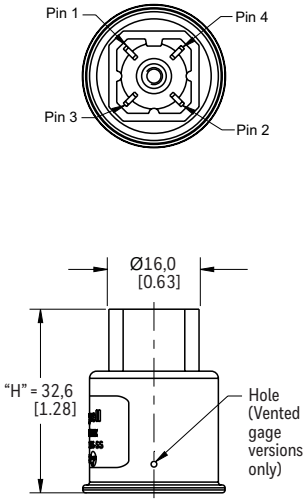

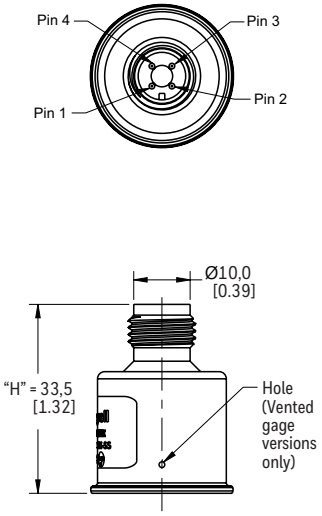

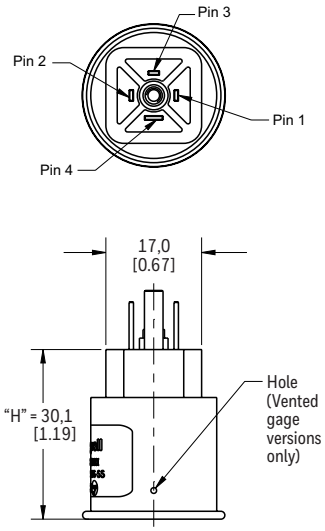

Figure 5. Electrical Connector Type Mounting Dimensions (continued)

H **AMP Superseal 1.5**		**L** **Cable Harness, 1 Meter** **M** **Cable Harness, 3 Meter**			**P** **Flying Leads**			**T** **Deutsch DTM04-3P (integral)**		
Connector: Amp 282087 **Mating connector:** Amp 282087 **IP rating[1]:** IP65 (all versions)		**Connector:** 24 AWG with TPE jacket **Mating connector:** Flying leads **IP rating[1]:** IP65, IP67, IP69K (sealed gage versions), IP65 (vented gage versions)			**Connector:** 6 in flying leads with 20 AWG wire and PE insulation **IP rating[1]:** IP65, IP67, IP69K (sealed gage versions), IP65 (vented gage versions)			**Connector:** DTM04-3P **Mating connector:** DTM06-3S with wedgelock WM-3S **IP rating[1]:** IP65, IP67, IP69K (sealed gage versions), IP65 (vented gage versions)		
Pin	**Voltage Output (3-wire)**	**Wire Color**	**Voltage Output (3-wire)**	**Current Output (2-wire)**	**Wire Color**	**Voltage Output (3-wire)**	**Current Output (2-wire)**	**Pin**	**Voltage Output (3-wire)**	**Current Output (2-wire)**
1	common	red	+excitation	+excitation	red	+excitation	+excitation	1	+excitation	+excitation
2	output	white	output	-excitation (return)	white	common	-excitation (return)	2	common	-excitation (return)
3	+excitation	black	common	no connection (black wire removed)	black	output	no connection (black wire removed)	3	output	no connection

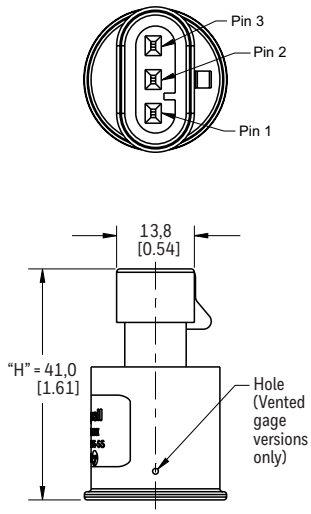

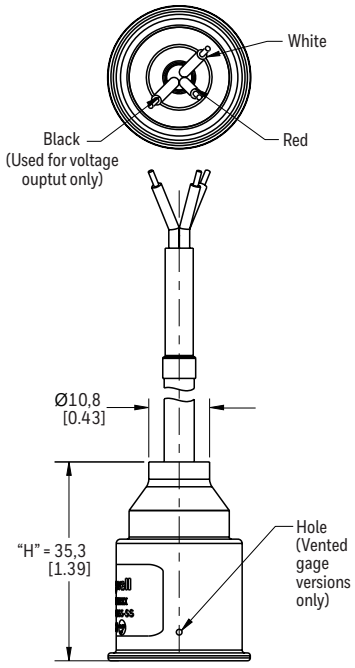

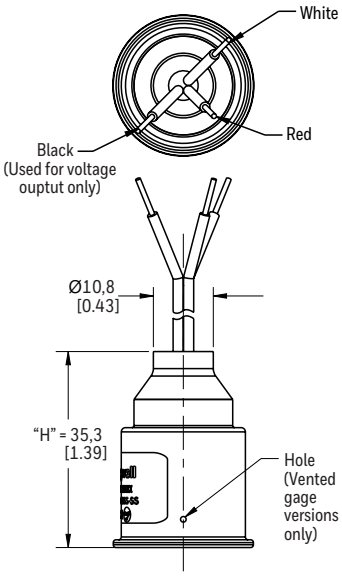

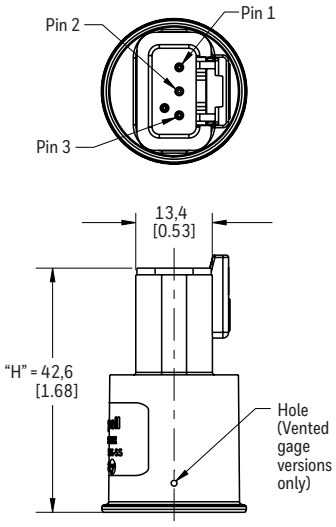

[1] IP rating is determined by the electrical connector type chosen.

[2] Three-wire cable is required for ratiometric and regulated voltage outputs; two wire cable is required for current output.

Heavy Duty Pressure Transducers

MLH Series, 6 bar to 550 bar | 50 psi to 8000 psi

Figure 6. Pressure Port Type Mounting Dimensions (For reference only: mm/[in].)[1]

"H" + "P" = total nominal product length

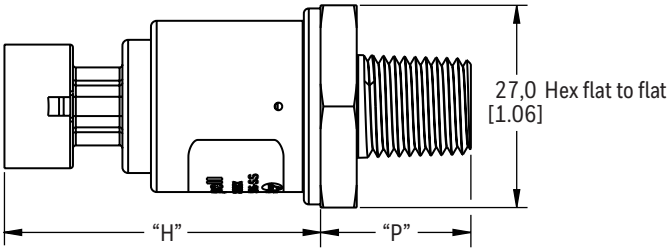

General product marking

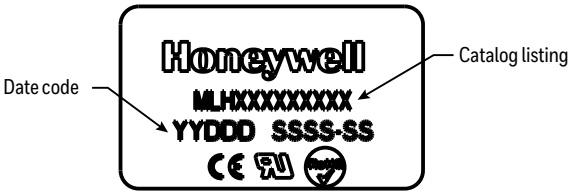

01 1/4-18 NPT	06 1/8-27 NPT	09 7/16-20 UNF 1/4 in 45° Flare Female Schrader with depressor
Seal: Pipe thread **Mating geometry:** ANSI B1.20.1-2013 **Installation torque:** 2 to 3 turns from finger tight 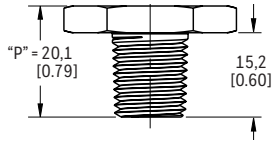 	**Seal:** Pipe thread **Mating geometry:** ANSI B1.20.1-2013 **Installation torque:** 2 to 3 turns from finger tight 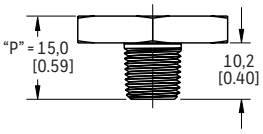 	**Seal:** 45° cone **Mating geometry:** SAE J512 **Installation torque:** 20 Nm [14.8 ft-lb] 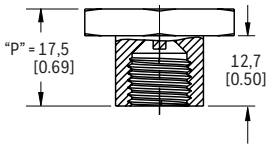
11 **1/2-14 NPT**	**13** **R1/4-19 (BSPT)**	**19** **R1/8-28 (BSPT)**
Seal: Pipe thread **Mating geometry:** ANSI B1.20.1-2013 **Installation Torque:** 2 to 3 turns from finger tight 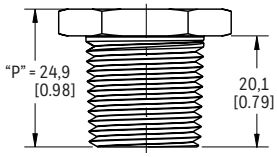 	**Seal:** Pipe thread **Mating geometry:** ISO 7-1 **Installation Torque:** 2 to 3 turns from finger tight 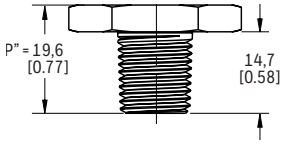 	**Seal:** Pipe thread **Mating geometry:** ISO 7-1 **Installation Torque:** 2 to 3 turns from finger tight 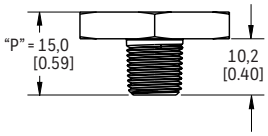
50 **3/8-24 UNF (SAE J1926-2)**	**51** **7/16-20 UNF (SAE J1926-2)**	**52** **1/2-20 UNF (SAE J1926-2)**
Seal[1]: O-ring **Mating geometry:** SAE J1926-1 **Installation torque:** 10 N m [7.4 ft-lb] 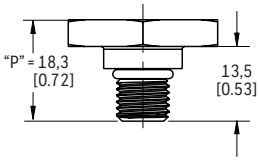 	**Seal[1]:** O-ring **Mating geometry:** SAE J1926-1 **Installation torque:** 20 N m [14.8 ft-lb] 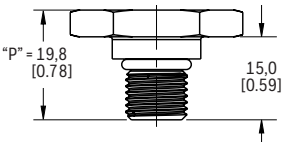 	**Seal[1]:** O-ring **Mating geometry:** SAE J1926-1 **Installation torque:** 40 N m [29.5 ft-lb] 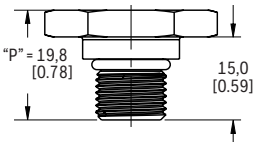
53 **9/16-18 UNF (SAE J1926-2)**	**54** **M10x1.0 (ISO 6149-2)**	**55** **M12x1.5 (ISO 6149-2)**
Seal[1]: O-ring **Mating geometry:** SAE J1926-1 **Installation torque:** 45 N m [33.2 ft-lb] 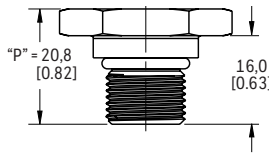 	**Seal[1]:** O-ring **Mating geometry:** ISO 6149-2 **Installation torque:** 20 N m [14.8 ft-lb] 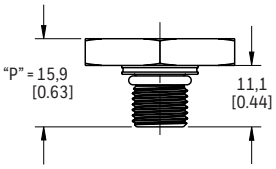 	**Seal[1]:** O-ring **Mating geometry:** ISO 6149-2 **Installation torque:** 45 N m [33.2 ft-lb] 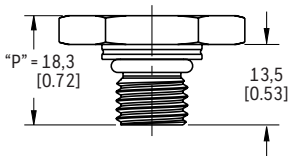

Figure 6. Pressure Port Type Mounting Dimensions (continued)

56
M14x1.5 (ISO 6149-2)

Seal[1]: O-ring
Mating geometry: ISO 6149-1
Installation torque: 45 N m [33.2 ft-lb]

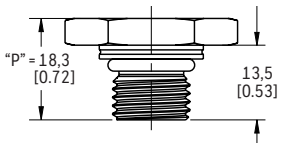

57
M16x1.5 (ISO 6149-2)

Seal[1]: O-ring
Mating geometry: ISO 6149-1
Installation torque: 55 N m [40.6 ft-lb]

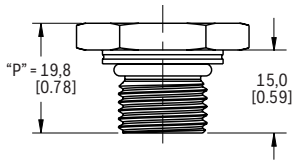

58
M18x1.5 (ISO 6149-2)

Seal[1]: O-ring
Mating geometry: ISO 6149-1
Installation torque: 70 N m [51.6 ft-lb]

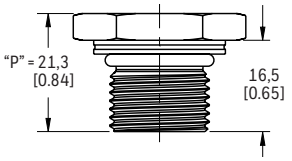

59
M20x1.5 (ISO 6149-2)

Seal[1]: O-ring
Mating geometry: ISO 6149-1
Installation torque: 80 N m [59.0 ft-lb]

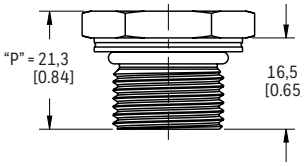

60
G1/8-28 (BSPP) DIN 3852-2

Seal[1]: Bonded washer
Mating geometry with bonded washer: DIN3852-1; 2000-11, large
Installation torque: 20 N m [14.8 ft-lb]

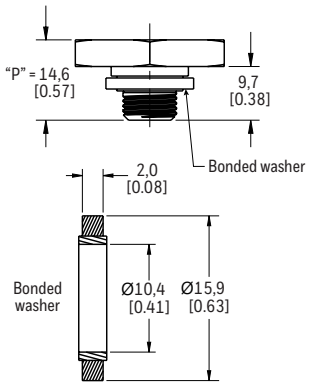

61
G1/4-19 (BSPP) DIN 3852-2

Seal[1]: Bonded washer
Mating geometry with bonded washer: DIN 3852-1:2000-11, large
Installation torque: 50 N m [36.9 ft-lb]

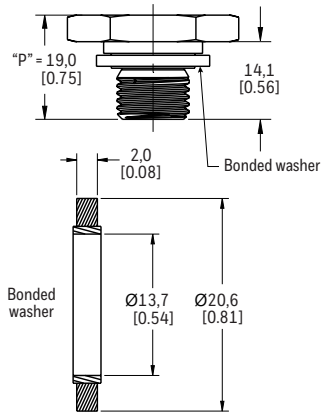

62
G1/8-28 (BSPP) ISO 1179-2

Seal[1]: Elastomeric
Mating geometry: ISO 1179-1
Installation torque: 20 N m [14.8 ft-lb]

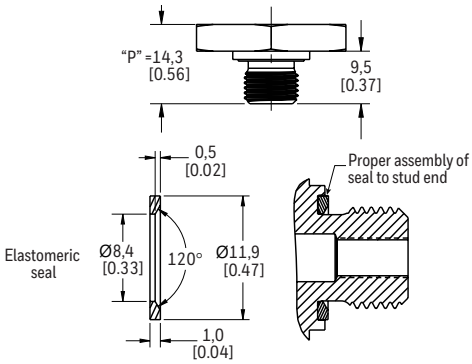

63
G1/4-19 (BSPP) ISO 1179-2

Seal[1]: Elastomeric
Mating geometry: ISO 1179-1
Installation torque: 50 N m [36.9 ft-lb]

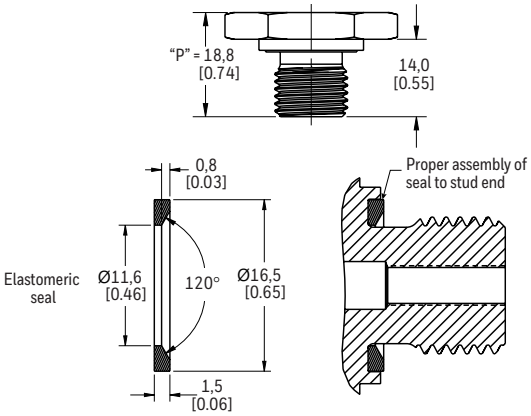

[1] Seal accessory included with transducer. Seal accessory material and specifications: O-ring (nitrile, durometer 90, temperature range -30°C to 125°C), bonded washer (steel outer ring with nitrile inner ring, temperature range -30°C to 125°C), elastomeric seal (nitrile, temperature range -30°C to 125°C).

ADDITIONAL INFORMATION

The following associated literature is available on the Honeywell web site at sensing.honeywell.com:

- Product line guide
- Product range guide
- Product installation instructions
- Product CAD models

⚠ WARNING
PERSONAL INJURY

DO NOT USE these products as safety or emergency stop devices or in any other application where failure of the product could result in personal injury.

Failure to comply with these instructions could result in death or serious injury.

⚠ WARNING
MISUSE OF DOCUMENTATION

- The information presented in this datasheet is for reference only. Do not use this document as a product installation guide.
- Complete installation, operation, and maintenance information is provided in the instructions supplied with each product.

Failure to comply with these instructions could result in death or serious injury.

Warranty/Remedy

Honeywell warrants goods of its manufacture as being free of defective materials and faulty workmanship during the applicable warranty period. Honeywell's standard product warranty applies unless agreed to otherwise by Honeywell in writing; please refer to your order acknowledgement or consult your local sales office for specific warranty details. If warranted goods are returned to Honeywell during the period of coverage, Honeywell will repair or replace, at its option, without charge those items that Honeywell, in its sole discretion, finds defective. The foregoing is buyer's sole remedy and is in lieu of all other warranties, expressed or implied, including those of merchantability and fitness for a particular purpose. In no event shall Honeywell be liable for consequential, special, or indirect damages.

While Honeywell may provide application assistance personally, through our literature and the Honeywell web site, it is buyer's sole responsibility to determine the suitability of the product in the application.

Specifications may change without notice. The information we supply is believed to be accurate and reliable as of this writing. However, Honeywell assumes no responsibility for its use.

For more information

Honeywell Sensing and Internet of Things services its customers through a worldwide network of sales offices and distributors. For application assistance, current specifications, pricing or the nearest Authorized Distributor, visit sensing.honeywell.com or call:

Asia Pacific	+65 6355-2828
Europe	+44 (0) 1698 481481
USA/Canada	+1-800-537-6945

Honeywell Sensing and Internet of Things
9680 Old Bailes Road
Fort Mill, SC 29707
www.honeywell.com

Honeywell

32328895-B-EN | B | 03/18
© 2018 Honeywell International Inc. All rights reserved.