Tantalum Leaded Capacitors

www.kemet.com

F3100F 2/08

The Capacitance Company

KEMET

CHARGED.™

INDEX

Tantalum Hermetically Sealed/Axial Capacitors

Military Ordering Information 4
Military Marking Information 4
Military Approval Levels 5
Performance Characteristics 5
T110/T212 (CSR13) MIL-PRF-39003/1 Series
Outline Drawing 6
Dimensions 6
Ordering & T110 Marking Information 6
Ratings and Part Number Reference 7-19
T111/T213 (CSR91) MIL-PRF-39003/4 Series
Outline Drawing 20
Dimensions 20
Ordering & T111 Marking Information 20
Ratings and Part Number Reference 20-23
T222 (CSR09) MIL-PRF-39003/2 Series
Outline Drawing 24
Dimensions 24
Ordering & Military Marking Information 24
Ratings and Part Number Reference 25-26
T140/T242 (CSR23) MIL-PRF-39003/3 Series
Outline Drawing 27
Dimensions 27
T140 Marking Information 27
Ratings and Part Number Reference 27-30
T252 (CSR33) MIL-PRF-39003/6 Series
Outline Drawing 31
Dimensions 31
Ordering Information 31
Ratings and Part Number Reference 32-33
T262 (CSR21) MIL-PRF-39003/9 Series
Outline Drawing 34
Dimensions 34
Ordering Information 34
Ratings and Part Number Reference 35-36
T216 (CSS13) & T256 (CSS33) MIL-PRF-39003/10 Series
Outline Drawing 37
Dimensions 37
Ordering Information 37
Military Ordering Information 38
Marking Information 38
Ratings and Part Number Reference 38-41

Tantalum Molded Axial/Radial Capacitors

T322/T323 (CX01 & CX05) MIL-PRF-49137/1 & 5 Series — Axial
Performance Characteristics 42
Outline Drawing 43
Dimensions 43
Ordering Information 43
Ratings and Part Number Reference 44-48
T330 & T340 Series — Radial
Performance Characteristics 49
T330 Outline Drawing 50
T330 Dimensions 50
T330 Ordering Information 50
T330 Marking Information 50
T330 Ratings and Part Number Reference 51-52
T340 Outline Drawing 53
T340 Dimensions 53
T340 Ordering Information 53
T340 Marking Information 54
T340 Ratings and Part Number Reference 55-57
T370/T378 (CX06) MIL-PRF-49137/6 Series — Radial
Performance Characteristics 58
Outline Drawing 59
Dimensions 59
Marking Information 59
Ordering Information 59
Ratings and Part Number Reference 60

Tantalum Dipped Radial Capacitors

Performance Characteristics 61
T35X Series
Outline Drawing 62
Dimensions 62
Lead Configuration 62
Ordering Information 63
Marking Information 63
Ratings and Part Number Reference 63-65
T363 (CX02) & T369 (CX12) MIL-PRF-49137/2 Series
Outline Drawing 66
Dimensions 66
Marking Information 66
Ordering Information 66
Ratings and Part Number Reference 67
T368 Series
Outline Drawing 68
Dimensions 68
Ratings and Part Number Reference 68
T396 & T398 Series
Outline Drawing 69
Dimensions 69
Ordering Information 69
Ratings and Part Number Reference 70

Tantalum Axial Tape & Reel Packaging Information 71
Tantalum Radial Tape & Reel Packaging Information 72
Tantalum Leaded Packaging Quantities 73-74
Application Notes for Solid Tantalum Capacitors 75-83

IMPORTANT NOTICE

KEMET Electronics Corporation disclaims all warranties, whether express, implied, or statutory as to any manner whatsoever, including the condition of the equipment, its compatibility with specific requirements, its merchantability, or fitness for any particular purpose which extend beyond the description on the face hereof.

Furthermore, under no circumstances shall KEMET Electronics Corporation be liable for consequential, special, incidental or indirect damages resulting from the use or handling of this product.

Finally, KEMET Electronics Corporation does not assume any responsibility for the correctness of the information contained in this catalog. All design characteristics, specifications, tolerances, and the like are subject to change without notice.

ORDERING INFORMATION (OBSOLETE*)

CSR XX B 565 K M

TYPE
Capacitors, Fixed, Solid Electrolyte, Tantalum
Established Reliability

STYLE
Tubular Case — Always Sleeved

09 — Miniature — T222
13 — Standard — T212
21 — Standard, low ESR — T262
23 — Extended Range — T242
33 — Extended Range, Low Leakage — T252
91 — Non-Polar — T213

VOLTAGE

Symbol	VDC Working 85°C	VDC Working 125°C	VDC Surge 85°C	VDC Surge 125°C
B	6	4	8	5
C	10	7	13	9
D	15	10	20	12
E	20	13	26	16
F	35	23	46	28
G	50	33	65	40
H	75	50	98	64
J	100	67	130	86

CAPACITANCE
Expressed in picofarads (1 microfarad = 1,000,000 picofarads). First two digits represent significant figures. Last digit specifies the number of zeros to follow.

Examples
565 — 5,600,000 = 5.60 µF 563 — 56,000 = .056 µF
564 — 560,000 = .56 µF

CAPACITANCE TOLERANCE
J — ± 5%
K — ± 10%
M — ± 20%

FAILURE RATE LEVEL IN % PER 1000 HOURS

GRADED	EXPONENTIAL
A — Not Applicable	M — 1%/k hrs.
B — 0.1%/k hrs.	P — 0.1%/k hrs.
C — 0.01%/k hrs.	R — 0.01%/k hrs.
D — 0.001%/k hrs.	S — 0.001%k hrs.

*This Military Part Numbering System is obsolete in accordance with the current specifications. The correct current designation for a CSR part number is the MIL Specification Number, followed by the Specification (slash) Sheet Number and Dash Number (i.e. — MIL-PRF-39003/01-2270). However, the part number breakdown shown above is still widely used and is shown for reference.

MILITARY CAPACITOR APPROVED FAILURE RATE LEVELS AND MARKINGS PER MIL-PRF-39003 FOR CSR09 (T222 A & B CASE SIZES ONLY), CSR13 (T212), CSR21 (T262), CSR23 (T242) & CSR33 (T252) CAPACITORS

KEMET APPROVED FAILURE RATE LEVELS — MIL-PRF-39003/H (EXPONENTIAL)

STYLE	DESCRIPTION	KEMET SERIES	APPROVED FAILURE RATE LEVEL
CSR09	Polar-Subminiature	T222	S (0.001%/k hrs.)
CSR13	Polar-Standard MIL Range	T212	S (0.001%/k hrs.)
CSR21	Polar-Standard Low ESR MIL Range	T262	S (0.001%/k hrs.)
CSR23	Polar-Extended Range	T242	S (0.001%/k hrs.)

STYLE	DESCRIPTION	KEMET SERIES	APPROVED FAILURE RATE LEVEL
CSR33	Polar-Extended Range Low Leakage	T252	S (0.001%/k hrs.)
CSR91	Non-Polar	T213	S (0.001%/k hrs.)

MILITARY MARKING

A CASE

39003	Military specification number
01 - K	Specification sheet number and trademark
9002J	Military dash number and "J" for JAN
+333	Polarity, date code (1st digit indicates year and the next two digits indicate the week)
XY	Lot symbol

C & D CASES

M39003	Military specification number
01 - 8222J	Specification sheet number, Military dash number, and "J" for JAN
+8.2 µF	Positive terminal identifier and capacitance value
10% 50V	Capacitance tolerance and voltage
31433	Source code
0333 XY K	Date code, lot code, and trademark

B CASE

M39003	Military specification number
01 -	Specification sheet number
8006J	Military dash number and "J" for JAN
31433	Source code
+333 XY	Polarity, date code (1st digit indicates year and the next two digits indicate the week), lot symbol

CSR91 (T213) CAPACITORS A, B, C & D CASES

M39003	Military specification number
04 - 0980J	Specification sheet number, Military dash number, and "J" for JAN
1 µF	Capacitance value
10% 20VNP	Capacitance tolerance and voltage rating
0333 XY 31433	Date code, lot code, and source code

(See page 38 for CSS Marking)

KEMET APPROVED FAILURE RATE LEVELS — MIL-PRF-39003/H (GRADED)

STYLE	DESCRIPTION	KEMET SERIES	APPROVED FAILURE RATE LEVEL*
CSR09	Polar-Subminiature	T222	D (0.001%/k hrs.)
CSR13*	Polar-Standard MIL Case	T212	D (0.001%/k hrs.)
CSS13**	Polar-Standard MIL Case	T216	C (0.01%/k hrs.)
CSR21	Polar-Standard Low ESR MIL Case	T262	D (0.001%/k hrs.)
CSR23*	Polar-Extended Range	T242	D (0.001%/k hrs.)

*Not approved to 'D' Failure Rate Level on all voltages and capacitance values.
**MIL-PRF-39003/10 for space applications.

STYLE	DESCRIPTION	KEMET SERIES	APPROVED FAILURE RATE LEVEL*
CSR33*	Polar-Extended Range Low Leakage	T252	D (0.001%/k hrs.)
CSS33**	Polar-Extended Range Low Leakage	T256	C (0.01%/k hrs.)
CSR91*	Non-Polar	T213	D (0.001%/k hrs.)

*Not approved to 'D' Failure Rate Level on all voltages and capacitance values.
**MIL-PRF-39003/10 for space applications.

PERFORMANCE CHARACTERISTICS

- CAPACITANCE/VOLTAGE RANGE: .0023-1200µF, 6-125 Volts.
- CAPACITANCE TOLERANCE: Available in standard EIA values with ±20%, ±10% and ±5% tolerances.
- DISSIPATION FACTOR: Maximum DF limits are shown in corresponding series part number listings on pages 7-41. See Application Notes Section, page 76 for additional description.
- DC LEAKAGE CURRENT: Each corresponding part number table lists maximum leakage current for each capacitor on pages 7-41. See Application Notes Section, page 76 for additional description.
- RATED VOLTAGE; WORKING VOLTAGE; SURGE VOLTAGE; REVERSE VOLTAGE: See Application Notes Section, Pages 76 & 77 for description.
- IMPEDANCE and ESR: See Application Notes Section, pages 77 & 78 for description. Reference ESR values are shown for commercial hermetically sealed capacitors on page 19.
- AC RIPPLE VOLTAGE: Permissible AC ripple voltage is related to the ESR of the capacitor and the power dissipation capabilities of a particular case size. Thermal capacities for the various case sizes have been determined empirically and are listed below. For additional description see page 78.

Standard Case Size	Watts	T222
A	.09	.070
B	.100	.090
C	.125	—
D	.180	—

Maximum Power Dissipation: 25°C Ambient

- ENVIRONMENTAL CONSIDERATIONS:
  A. Shock Test: MIL-STD-202, Method 213
  B. Thermal Shock, MIL-STD-202, Method 107, Condition B.
  C. Moisture Resistance: MIL-STD-202, Method 106.
  D. Solderability: MIL-STD-202, Method 208

For additional Environmental Test Information see pages 80, 81 and 82.

- LEAD MATERIAL: Standard leads are solder-coated nickel per MIL-STD-1276.
- INSULATING SLEEVES: The standard insulating material used in transparent high temperature plastic, having 2000 volt dielectric strength, excellent dimensional stability and chemical and cold flow resistance.
- LEAD TAPE and REEL: Reeling per specification RS-296. See pages 71 and 73 for additional information.

TANTALUM HERMETICALLY SEALED / AXIAL — MIL-PRF-39003

T110 SERIES — POLAR TYPE, T212 (CSR13)

KEMET standard hermetic sealed T110 Series are desirable for use in high humidity environments. They are ruggedly built, designed for miniaturized circuitry, and are especially suited for coupling, bypass, filtering and R-C timing circuits. They exhibit excellent stability, extremely low DC leakage current, dissipation factor, and ESR/impedance over a wide temperature and frequency range.

Available in standard EIA capacitance values from .0047-330 µF in ±20%, ±10%, and ±5% tolerances and working voltages from 6-125 VDC.

Higher CV values in comparable case sizes are available in KEMET T140 Series. Refer to page 27.

Included in the following Series table is a complete listing of CSR13 qualified MIL-PRF-39003 capacitors. KEMET is approved to manufacture the S (0.001%/k hrs.) Exponential & D (0.001%/k hrs.) Graded failure rate levels.

KEMET is now offering low ESR limits in the T110 Series. See ESR chart on page 19. You may order the lower ESR by using Customer Specification 2864 as the last four digits of the part number.

Effective September 30, 2005, the KEMET T110 Series is RoHS Compliant.

CAPACITOR OUTLINE DRAWINGS

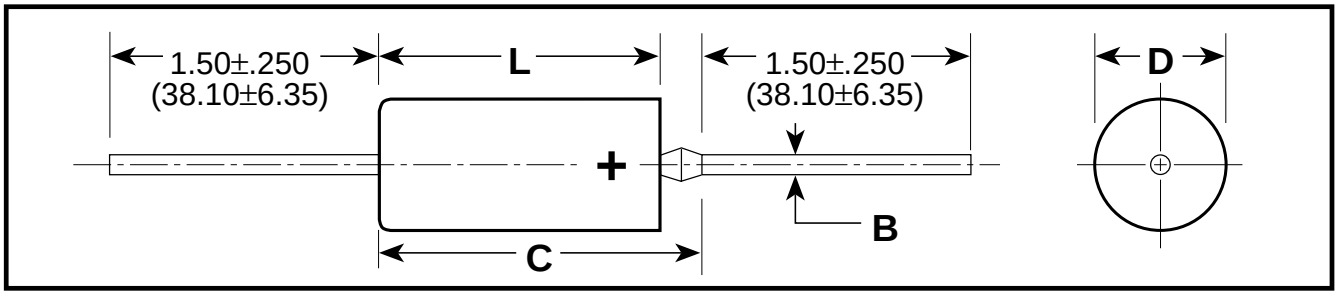

DIMENSIONS — INCHES & (MILLIMETERS)

CASE SIZE	UNINSULATED D ±0.005 ±(.13)	UNINSULATED L ±0.031 ±(.79)	INSULATED D ±0.010 ±(.25)	INSULATED L ±0.031 ±(.79)	B ±0.002 ±(.05)	C MAX.
A	0.125 (3.18)	0.250 (6.35)	0.135 (3.43)	0.286 (7.26)	0.020 (.51)	0.422 (10.72)
B	0.175 (4.45)	0.438 (11.13)	0.185 (4.70)	0.474 (12.04)	0.020 (.51)	0.610 (15.49)
C	0.279 (7.09)	0.650 (16.51)	0.289 (7.34)	0.686 (17.42)	0.025 (.64)	0.822 (20.88)
D	0.341 (8.66)	0.750 (19.05)	0.351 (8.92)	0.786 (19.96)	0.025 (.64)	0.922 (23.42)

ORDERING INFORMATION*

T XXX A 105 K 050 A S C

TANTALUM — T

SERIES — XXX
T110, T212 (CSR13)
T111, T213 (CSR91)
T140, T242 (CSR23)

CASE SIZE — A
A / B / C / D

PICOFARAD CODE — 105
First two digits represent significant figures.
Third digit specifies number of zeros to follow.

CAPACITANCE TOLERANCE — K
M — ±20% K — ±10% J — ±5%

VOLTAGE — 050
At 85°C

SPECIFICATION — C
All capacitors are sleeved unless specified.

LEAD MATERIAL — S
S — Standard
T – 100% Tin (T110, T140 Series only)

FAILURE RATE** — A

GRADED	EXPONENTIAL
A — Not Applicable	M — 1%/k hrs.
B — 0.1%/k hrs.	P — 0.1%/k hrs.
C — 0.01%/k hrs.	R — 0.01%/k hrs.
D — 0.001%/k hrs.	S — 0.001%/k hrs.

****Failure Rates apply only to military products.**

****Part Number Example: T110A105K050AS (14 digits - no spaces)**
***For Military Ordering Information, see page 4.**

MARKING INFORMATION

Marking: Unless otherwise specified by special order, standard marking of T110 Series capacitor consists of the following:

A, B, C & D CASES

+K 10%	Polarity, Manufacturer's Identification and Capacitance Tol.
R56 µF	Nominal Capacitance — (µF) ("R" indicates decimal)
100V	Voltage
0312	Date Code (e.g.: 0312)

*** For Military Marking, see page 4.**

KEMET Electronics Corporation, P.O. Box 5928, Greenville, S.C. 29606 (864) 963-6300

RATINGS & PART NUMBER REFERENCE

CAPACITANCE µF	CASE SIZE	CAPACITANCE TOLERANCE ±%	KEMET T110 KEMET PART NUMBER	D.C. LEAKAGE µA@25°C MAX.	MAX. DISSIPATION FACTOR %@25°C, 120Hz	MIL-PRF-39003 (CSR13) CAPACITORS — DASH NUMBER REFERENCE FAILURE RATE LEVEL (%/1000 HRS.) — MIL-PRF-39003/1H EXPONENTIAL M (1.0)	P (0.1)	R (0.01)	S (0.001)	MIL-PRF-39003/1H GRADED B (0.1)	C (0.01)	D (0.001)	KEMET EQUIVALENT MILITARY PART NUMBER
6 VOLT RATING AT 85°C — 4 VOLT RATING AT 125°C													
2.2	A	5,10,20	T110A225(1)006AS	0.3	4								
2.7	A	5,10,20	T110A275(1)006AS	0.3	4								
3.3	A	5,10,20	T110A335(1)006AS	0.3	4								
3.9	A	5,10,20	T110A395(1)006AS	0.3	4								
4.7	A	5,10,20	T110A475(1)006AS	0.3	4								
5.6	A	5	T110A565J006AS	0.3	4	5001	5201	5401	5601	6001	7001	8001	T212A565J006(2)S
5.6	A	10	T110A565K006AS	0.3	4	2241	2481	2721	2961	6002	7002	8002	T212A565K006(2)S
5.6	A	20	T110A565M006AS	0.3	4								
6.8	**A**	**5**	**T110A685J006AS**	**0.3**	**6**	**5002**	**5202**	**5402**	**5602**	**6003**	**7003**	**8003**	**T212A685J006(2)S**
6.8	**A**	**10**	**T110A685K006AS**	**0.3**	**6**	**2242**	**2482**	**2722**	**2962**	**6004**	**7004**	**8004**	**T212A685K006(2)S**
6.8	**A**	**20**	**T110A685M006AS**	**0.3**	**6**	**2243**	**2483**	**2723**	**2963**	**6005**	**7005**	**8005**	**T212A685M006(2)S**
8.2	B	5,10,20	T110B825(1)006AS	0.3	6								
10.0	B	5,10,20	T110B106(1)006AS	0.3	6								
12.0	B	5,10,20	T110B126(1)006AS	0.5	6								
15.0	B	5,10,20	T110B156(1)006AS	0.9	6								
18.0	B	5,10,20	T110B186(1)006AS	0.9	6								
22.0	B	5,10,20	T110B226(1)006AS	0.9	6								
27.0	B	5,10,20	T110B276(1)006AS	0.9	6								
33.0	B	5,10,20	T110B336(1)006AS	0.9	6								
39.0	B	5,10,20	T110B396(1)006AS	0.9	6								
47.0	**B**	**5**	**T110B476J006AS**	**1.5**	**6**	**5003**	**5203**	**5403**	**5603**	**6006**	**7006**	**8006**	**T212B476J006(2)S**
47.0	**B**	**10**	**T110B476K006AS**	**1.5**	**6**	**2244**	**2484**	**2724**	**2964**	**6007**	**7007**	**8007**	**T212B476K006(2)S**
47.0	**B**	**20**	**T110B476M006AS**	**1.5**	**6**	**2245**	**2485**	**2725**	**2965**	**6008**	**7008**	**8008**	**T212B476M006(2)S**
56.0	**B**	**5**	**T110B566J006AS**	**1.5**	**6**	**5004**	**5204**	**5404**	**5604**	**6009**	**7009**	**8009**	**T212B566J006(2)S**
56.0	**B**	**10**	**T110B566K006AS**	**1.5**	**6**	**2246**	**2486**	**2726**	**2966**	**6010**	**7010**	**8010**	**T212B566K006(2)S**
56.0	**B**	**20**	**T110B566M006AS**	**1.5**	**6**								
68.0	C	5,10,20	T110C686(1)006AS	3.0	6								
82.0	C	5,10,20	T110C826(1)006AS	3.0	6								
100.0	C	5,10,20	T110C107(1)006AS	3.0	6								
120.0	C	5,10,20	T110C127(1)006AS	3.0	6								
150.0	C	5	T110C157J006AS	4.5	6	5005	5205	5405	5605	6011	7011	8011	T212C157J006(2)S
150.0	C	10	T110C157K006AS	4.5	6	2247	2487	2727	2967	6012	7012	8012	T212C157K006(2)S
150.0	C	20	T110C157M006AS	4.5	6	2248	2488	2728	2968	6013	7013	8013	T212C157M006(2)S
180.0	C	5	T110C187J006AS	5.5	6	5006	5206	5406	5606	6014	7014	8014	T212C187J006(2)S
180.0	C	10	T110C187K006AS	5.5	6	2249	2489	2729	2969	6015	7015	8015	T212C187K006(2)S
180.0	C	20	T110C187M006AS	5.5	6								
220.0	D	5,10,20	T110D227(1)006AS	6.0	8								
270.0	D	5	T110D277J006AS	6.0	8	5007	5207	5407	5607	6016	7016	8016	T212D277J006(2)S
270.0	D	10	T110D277K006AS	6.0	8	2250	2490	2730	2970	6017	7017	8017	T212D277K006(2)S
270.0	D	20	T110D277M006AS	6.0	8								
330.0	**D**	**5**	**T110D337J006AS**	**7.5**	**8**	**5008**	**5208**	**5408**	**5608**	**6018**	**7018**	**8018**	**T212D337J006(2)S**
330.0	**D**	**10**	**T110D337K006AS**	**7.5**	**8**	**2251**	**2491**	**2731**	**2971**	**6019**	**7019**	**8019**	**T212D337K006(2)S**
330.0	**D**	**20**	**T110D337M006AS**	**7.5**	**8**	**2252**	**2492**	**2732**	**2972**	**6020**	**7020**	**8020**	**T212D337M006(2)S**
10 VOLT RATING AT 85°C — 7 VOLT RATING AT 125°C													
1.0	A	5,10,20	T110A105(1)010AS	0.3	3								
1.2	A	5,10,20	T110A125(1)010AS	0.3	4								
1.5	A	5,10,20	T110A155(1)010AS	0.3	4								
1.8	A	5,10,20	T110A185(1)010AS	0.3	4								
2.2	A	5,10,20	T110A225(1)010AS	0.3	4								
2.7	A	5,10,20	T110A275(1)010AS	0.3	4								
3.3	A	5,10,20	T110A335(1)010AS	0.3	4								
3.9	A	5	T110A395J 010AS	0.3	4	5009	5209	5409	5609	6021	7021	8021	T212A395J010(2)S
3.9	A	10	T110A395K 010AS	0.3	4	2253	2493	2733	2973	6022	7022	8022	T212A395K010(2)S
3.9	A	20	T110A395M 010AS	0.3	4								
4.7	**A**	**5**	**T110A475J 010AS**	**0.4**	**4**	**5010**	**5210**	**5410**	**5610**	**6023**	**7023**	**8023**	**T212A475J010(2)S**
4.7	**A**	**10**	**T110A475K 010AS**	**0.4**	**4**	**2254**	**2494**	**2734**	**2974**	**6024**	**7024**	**8024**	**T212A475K010(2)S**
4.7	**A**	**20**	**T110A475M010AS**	**0.4**	**4**	**2255**	**2495**	**2735**	**2975**	**6025**	**7025**	**8025**	**T212A475M010(2)S**

(1) To complete T110 Series Part Number, insert Capacitance Tolerance Symbol in the 9th Character as shown on Page 6.
(2) To complete the T212 Series Part Number, insert Failure Rate Symbol in the 13th Character.
Bold Face lines indicate popular part types and values.

RATINGS & PART NUMBER REFERENCE

CAPACITANCE µF	CASE SIZE	CAPACITANCE TOLERANCE ±%	KEMET T110 PART NUMBER	D.C. LEAKAGE µA@25°C MAX.	MAX. DISSIPATION FACTOR %@25°C, 120Hz	MIL-PRF-39003 (CSR13) CAPACITORS — DASH NUMBER REFERENCE FAILURE RATE LEVEL (%/1000 HRS.) — MIL-PRF-39003/1H EXPONENTIAL: M (1.0)	P (0.1)	R (0.01)	S (0.001)	MIL-PRF-39003/1H GRADED: B (0.1)	C (0.01)	D (0.001)	KEMET EQUIVALENT MILITARY PART NUMBER
10 VOLT RATING AT 85°C — 7 VOLT RATING AT 125°C (Cont'd)													
5.6	B	5,10,20	T110B565(1)010AS	0.4	4								
6.8	B	5,10,20	T110B685(1)010AS	1.0	6								
8.2	B	5,10,20	T110B825(1)010AS	1.0	6								
10.0	B	5,10,20	T110B106(1)010AS	1.0	6								
12.0	B	5,10,20	T110B126(1)010AS	1.0	6								
15.0	B	5,10,20	T110B156(1)010AS	1.0	6								
18.0	B	5,10,20	T110B186(1)010AS	1.0	6								
22.0	B	5,10,20	T110B226(1)010AS	2.0	6								
27.0	B	5	T110B276J010AS	2.0	6	5011	5211	5411	5611	6026	7026	8026	T212B276J010(2)S
27.0	B	10	T110B276K010AS	2.0	6	2256	2496	2736	2976	6027	7027	8027	T212B276K010(2)S
27.0	B	20	T110B276M010AS	2.0	6								
33.0	**B**	**5**	**T110B336J010AS**	**2.0**	**6**	**5012**	**5212**	**5412**	**5612**	**6028**	**7028**	**8028**	**T212B336J010(2)S**
33.0	**B**	**10**	**T110B336K010AS**	**2.0**	**6**	**2257**	**2497**	**2737**	**2977**	**6029**	**7029**	**8029**	**T212B336K010(2)S**
33.0	**B**	**20**	**T110B336M010AS**	**2.0**	**6**	**2258**	**2498**	**2738**	**2978**	**6030**	**7030**	**8030**	**T212B336M010(2)S**
39.0	**B**	**5**	**T110B396J010AS**	**2.0**	**6**	**5013**	**5213**	**5413**	**5613**	**6031**	**7031**	**8031**	**T212B396J010(2)S**
39.0	**B**	**10**	**T110B396K010AS**	**2.0**	**6**	**2259**	**2499**	**2739**	**2979**	**6032**	**7032**	**8032**	**T212B396K010(2)S**
39.0	**B**	**20**	**T110B396M010AS**	**2.0**	**6**								
47.0	C	5,10,20	T110C476(1)010AS	3.0	6								
56.0	C	5,10,20	T110C566(1)010AS	3.0	6								
68.0	C	5,10,20	T110C686(1)010AS	3.0	6								
82.0	C	5	T110C826J010AS	3.0	6	5014	5214	5414	5614	6033	7033	8033	T212C826J010(2)S
82.0	C	10	T110C826K010AS	3.0	6	2260	2500	2740	2980	6034	7034	8034	T212C826K010(2)S
82.0	C	20	T110C826M010AS	3.0	6								
100.0	**C**	**5**	**T110C107J010AS**	**5.0**	**6**	**5015**	**5215**	**5415**	**5615**	**6035**	**7035**	**8035**	**T212C107J010(2)S**
100.0	**C**	**10**	**T110C107K010AS**	**5.0**	**6**	**2261**	**2501**	**2741**	**2981**	**6036**	**7036**	**8036**	**T212C107K010(2)S**
100.0	**C**	**20**	**T110C107M010AS**	**5.0**	**6**	**2262**	**2502**	**2742**	**2982**	**6037**	**7037**	**8037**	**T212C107M010(2)S**
120.0	C	5	T110C127J010AS	6.0	6	5016	5216	5416	5616	6038	7038	8038	T212C127J010(2)S
120.0	C	10	T110C127K010AS	6.0	6	2263	2503	2743	2983	6039	7039	8039	T212C127K010(2)S
120.0	C	20	T110C127M010AS	6.0	6								
150.0	D	5,10,20	T110D157(1)010AS	9.0	6								
180.0	D	5	T110D187J010AS	9.0	6	5017	5217	5417	5617	6040	7040	8040	T212D187J010(2)S
180.0	D	10	T110D187K010AS	9.0	6	2264	2504	2744	2984	6041	7041	8041	T212D187K010(2)S
180.0	D	20	T110D187M010AS	9.0	6								
220.0	**D**	**5**	**T110D227J010AS**	**10.0**	**8**	**5018**	**5218**	**5418**	**5618**	**6042**	**7042**	**8042**	**T212D227J010(2)S**
220.0	**D**	**10**	**T110D227K010AS**	**10.0**	**8**	**2265**	**2505**	**2745**	**2985**	**6043**	**7043**	**8043**	**T212D227K010(2)S**
220.0	**D**	**20**	**T110D227M010AS**	**10.0**	**8**	**2266**	**2506**	**2746**	**2986**	**6044**	**7044**	**8044**	**T212D227M010(2)S**
15 VOLT RATING AT 85°C — 10 VOLT RATING AT 125°C													
0.33	A	5,10,20	T110A334(1)015AS	0.3	3								
0.39	A	5,10,20	T110A394(1)015AS	0.3	3								
0.47	A	5,10,20	T110A474(1)015AS	0.3	3								
0.56	A	5,10,20	T110A564(1)015AS	0.3	3								
0.68	A	5,10,20	T110A684(1)015AS	0.3	3								
0.82	A	5,10,20	T110A824(1)015AS	0.3	3								
1.0	A	5,10,20	T110A105(1)015AS	0.3	3								
1.2	A	5,10,20	T110A125(1)015AS	0.3	4								
1.5	A	5,10,20	T110A155(1)015AS	0.3	4								
1.8	A	5,10,20	T110A185(1)015AS	0.3	4								
2.2	A	5,10,20	T110A225(1)015AS	0.3	4								
2.7	A	5	T110A275J015AS	0.3	4	5019	5219	5419	5619	6045	7045	8045	T212A275J015(2)S
2.7	A	10	T110A275K015AS	0.3	4	2267	2507	2747	2987	6046	7046	8046	T212A275K015(2)S
2.7	A	20	T110A275M015AS	0.3	4								
3.3	**A**	**5**	**T110A335J015AS**	**0.4**	**4**	**5020**	**5220**	**5420**	**5620**	**6047**	**7047**	**8047**	**T212A335J015(2)S**
3.3	**A**	**10**	**T110A335K015AS**	**0.4**	**4**	**2268**	**2508**	**2748**	**2988**	**6048**	**7048**	**8048**	**T212A335K015(2)S**
3.3	**A**	**20**	**T110A335M015AS**	**0.4**	**4**	**2269**	**2509**	**2749**	**2989**	**6049**	**7049**	**8049**	**T212A335M015(2)S**
3.9	B	5,10,20	T110B395(1)015AS	0.4	4								
4.7	B	5,10,20	T110B475(1)015AS	0.7	4								
5.6	B	5,10,20	T110B565(1)015AS	0.7	4								

(1) To complete T110 Series Part Number, insert Capacitance Tolerance Symbol in the 9th Character as shown on Page 6.
(2) To complete the T212 Series Part Number, insert Failure Rate Symbol in the 13th Character.
Bold Face lines indicate popular part types and values.

RATINGS & PART NUMBER REFERENCE

CAPACITANCE µF	CASE SIZE	CAPACITANCE TOLERANCE ±%	KEMET T110 KEMET PART NUMBER	D.C. LEAKAGE µA@25°C MAX.	MAX. DISSIPATION FACTOR %@25°C, 120Hz	MIL-PRF-39003 (CSR13) CAPACITORS — DASH NUMBER REFERENCE FAILURE RATE LEVEL (%/1000 HRS.) — MIL-PRF-39003/1H EXPONENTIAL M (1.0)	P (0.1)	R (0.01)	S (0.001)	MIL-PRF-39003/1H GRADED B (0.1)	C (0.01)	D (0.001)	KEMET EQUIVALENT MILITARY PART NUMBER
15 VOLT RATING AT 85°C — 10 VOLT RATING AT 125°C (Cont'd)													
6.8	B	5,10,20	T110B685(1)015AS	0.7	6								
8.2	B	5,10,20	T110B825(1)015AS	0.7	6								
10.0	B	5,10,20	T110B106(1)015AS	1.0	6								
12.0	B	5,10,20	T110B126(1)015AS	1.0	6								
15.0	B	5,10,20	T110B156(1)015AS	2.0	6								
18.0	B	5	T110B186J015AS	2.0	6	5021	5221	5421	5621	6050	7050	8050	T212B186J015(2)S
18.0	B	10	T110B186K015AS	2.0	6	2270	2510	2750	2990	6051	7051	8051	T212B186K015(2)S
18.0	B	20	T110B186M015AS	2.0	6								
22.0	**B**	**5**	**T110B226J015AS**	**2.0**	**6**	**5022**	**5222**	**5422**	**5622**	**6052**	**7052**	**8052**	**T212B226J015(2)S**
22.0	**B**	**10**	**T110B226K015AS**	**2.0**	**6**	**2271**	**2511**	**2751**	**2991**	**6053**	**7053**	**8053**	**T212B226K015(2)S**
22.0	**B**	**20**	**T110B226M015AS**	**2.0**	**6**	**2272**	**2512**	**2752**	**2992**	**6054**	**7054**	**8054**	**T212B226M015(2)S**
27.0	C	5,10,20	T110C276(1)015AS	3.0	6								
33.0	C	5,10,20	T110C336(1)015AS	3.0	6								
39.0	C	5,10,20	T110C396(1)015AS	3.0	6								
47.0	C	5,10,20	T110C476(1)015AS	4.0	6								
56.0	C	5	T110C566J015AS	4.0	6	5023	5223	5423	5623	6055	7055	8055	T212C566J015(2)S
56.0	C	10	T110C566K015AS	4.0	6	2273	2513	2753	2993	6056	7056	8056	T212C566K015(2)S
56.0	C	20	T110C566M015AS	4.0	6								
68.0	**C**	**5**	**T110C686J015AS**	**5.0**	**6**	**5024**	**5224**	**5424**	**5624**	**6057**	**7057**	**8057**	**T212C686J015(2)S**
68.0	**C**	**10**	**T110C686K015AS**	**5.0**	**6**	**2274**	**2514**	**2754**	**2994**	**6058**	**7058**	**8058**	**T212C686K015(2)S**
68.0	**C**	**20**	**T110C686M015AS**	**5.0**	**6**	**2275**	**2515**	**2755**	**2995**	**6059**	**7059**	**8059**	**T212C686M015(2)S**
82.0	D	5,10,20	T110D826(1)015AS	6.0	6								
100.0	D	5,10,20	T110D107(1)015AS	6.0	6								
120.0	D	5	T110D127J015AS	6.0	6	5025	5225	5425	5625	6060	7060	8060	T212D127J015(2)S
120.0	D	10	T110D127K015AS	6.0	6	2276	2516	2756	2996	6061	7061	8061	T212D127K015(2)S
120.0	D	20	T110D127M015AS	6.0	6								
150.0	**D**	**5**	**T110D157J015AS**	**8.0**	**6**	**5026**	**5226**	**5426**	**5626**	**6062**	**7062**	**8062**	**T212D157J015(2)S**
150.0	**D**	**10**	**T110D157K015AS**	**8.0**	**6**	**2277**	**2517**	**2757**	**2997**	**6063**	**7063**	**8063**	**T212D157K015(2)S**
150.0	**D**	**20**	**T110D157M015AS**	**8.0**	**6**	**2278**	**2518**	**2758**	**2998**	**6064**	**7064**	**8064**	**T212D157M015(2)S**
20 VOLT RATING AT 85°C — 13 VOLT RATING AT 125°C													
0.047	A	5,10,20	T110A473(1)020AS	0.1	3								
0.056	A	5,10,20	T110A563(1)020AS	0.1	3								
0.068	A	5,10,20	T110A683(1)020AS	0.1	3								
0.082	A	5,10,20	T110A823(1)020AS	0.1	3								
0.1	A	5,10,20	T110A104(1)020AS	0.3	3								
0.12	A	5,10,20	T110A124(1)020AS	0.3	3								
0.15	A	5,10,20	T110A154(1)020AS	0.3	3								
0.18	A	5,10,20	T110A184(1)020AS	0.3	3								
0.22	A	5,10,20	T110A224(1)020AS	0.3	3								
0.27	A	5,10,20	T110A274(1)020AS	0.3	3								
0.33	A	5,10,20	T110A334(1)020AS	0.3	3								
0.39	A	5,10,20	T110A394(1)020AS	0.3	3								
0.47	A	5,10,20	T110A474(1)020AS	0.3	3								
0.56	A	5,10,20	T110A564(1)020AS	0.3	3								
0.68	A	5,10,20	T110A684(1)020AS	0.3	3								
0.82	A	5,10,20	T110A824(1)020AS	0.3	3								
1.0	A	5,10,20	T110A105(1)020AS	0.3	3								
1.2	A	5	T110A125J020AS	0.3	4	5027	5227	5427	5627	6065	7065	8065	T212A125J020(2)S
1.2	A	10	T110A125K020AS	0.3	4	2279	2519	2759	2999	6066	7066	8066	T212A125K020(2)S
1.2	A	20	T110A125M020AS	0.3	4								
1.5	**A**	**5**	**T110A155J020AS**	**0.3**	**4**	**5028**	**5228**	**5428**	**5628**	**6067**	**7067**	**8067**	**T212A155J020(2)S**
1.5	**A**	**10**	**T110A155K020AS**	**0.3**	**4**	**2280**	**2520**	**2760**	**3000**	**6068**	**7068**	**8068**	**T212A155K020(2)S**
1.5	**A**	**20**	**T110A155M020AS**	**0.3**	**4**	**2281**	**2521**	**2761**	**3001**	**6069**	**7069**	**8069**	**T212A155M020(2)S**
1.8	A	5	T110A185J020AS	0.3	4	5029	5229	5429	5629	6070	7070	8070	T212A185J020(2)S
1.8	A	10	T110A185K020AS	0.3	4	2282	2522	2762	3002	6071	7071	8071	T212A185K020(2)S
1.8	A	20	T110A185M020AS	0.3	4								
2.2	**A**	**5**	**T110A225J020AS**	**0.4**	**4**	**5010**	**5230**	**5430**	**5630**	**6072**	**7072**	**8072**	**T212A225J020(2)S**
2.2	**A**	**10**	**T110A225K020AS**	**0.4**	**4**	**2283**	**2523**	**2763**	**3003**	**6073**	**7073**	**8073**	**T212A225K020(2)S**
2.2	**A**	**20**	**T110A225M020AS**	**0.4**	**4**	**2284**	**2524**	**2764**	**3004**	**6074**	**7074**	**8074**	**T212A225M020(2)S**

(1) To complete T110 Series Part Number, insert Capacitance Tolerance Symbol in the 9th Character as shown on Page 6.
(2) To complete the T212 Series Part Number, insert Failure Rate Symbol in the 13th Character.
Bold Face lines indicate popular part types and values.

RATINGS & PART NUMBER REFERENCE

CAPACITANCE µF	CASE SIZE	CAPACITANCE TOLERANCE ±%	KEMET T110 KEMET PART NUMBER	D.C. LEAKAGE µA@25°C MAX.	MAX. DISSIPATION FACTOR %@25°C, 120Hz	MIL-PRF-39003 (CSR13) CAPACITORS — DASH NUMBER REFERENCE FAILURE RATE LEVEL (%/1000 HRS.) — MIL-PRF-39003/1H EXPONENTIAL: M (1.0)	P (0.1)	R (0.01)	S (0.001)	MIL-PRF-39003/1H GRADED: B (0.1)	C (0.01)	D (0.001)	KEMET EQUIVALENT MILITARY PART NUMBER
20 VOLT RATING AT 85°C — 13 VOLT RATING AT 125°C (Cont'd)													
2.7	B	5,10,20	T110B275(1)020AS	0.5	4								
3.3	B	5,10,20	T110B335(1)020AS	1.0	4								
3.9	B	5,10,20	T110B395(1)020AS	1.0	4								
4.7	B	5,10,20	T110B475(1)020AS	1.0	4								
5.6	B	5,10,20	T110B565(1)020AS	1.0	4								
6.8	B	5,10,20	T110B685(1)020AS	1.0	4								
8.2	B	5	T110B825J020AS	1.0	6	5031	5231	5431	5631	6075	7075	8075	T212B825J020(2)S
8.2	B	10	T110B825K020AS	1.0	6	2285	2525	2765	3005	6076	7076	8076	T212B825K020(2)S
8.2	B	20	T110B825M020AS	1.0	6								
10.0	**B**	**5**	**T110B106J020AS**	**1.0**	**6**	**5032**	**5232**	**5432**	**5632**	**6077**	**7077**	**8077**	**T212B106J020(2)S**
10.0	**B**	**10**	**T110B106K020AS**	**1.0**	**6**	**2286**	**2526**	**2766**	**3006**	**6078**	**7078**	**8078**	**T212B106K020(2)S**
10.0	**B**	**20**	**T110B106M020AS**	**1.0**	**6**	**2287**	**2527**	**2767**	**3007**	**6079**	**7079**	**8079**	**T212B106M020(2)S**
12.0	B	5	T110B126J020AS	1.0	6	5033	5233	5433	5633	6080	7080	8080	T212B126J020(2)S
12.0	B	10	T110B126K020AS	1.0	6	2288	2528	2768	3008	6081	7081	8081	T212B126K020(2)S
12.0	B	20	T110B126M020AS	1.0	6								
15.0	**B**	**5**	**T110B156J020AS**	**2.0**	**6**	**5034**	**5234**	**5434**	**5634**	**6082**	**7082**	**8082**	**T212B156J020(2)S**
15.0	**B**	**10**	**T110B156K020AS**	**2.0**	**6**	**2289**	**2529**	**2769**	**3009**	**6083**	**7083**	**8083**	**T212B156K020(2)S**
15.0	**B**	**20**	**T110B156M020AS**	**2.0**	**6**	**2290**	**2530**	**2770**	**3010**	**6084**	**7084**	**8084**	**T212B156M020(2)S**
18.0	C	5,10,20	T110C186(1)020AS	2.0	6								
22.0	C	5,10,20	T110C226(1)020AS	2.5	6								
27.0	C	5	T110C276J020AS	2.5	6	5035	5235	5435	5635	6085	7085	8085	T212C276J020(2)S
27.0	C	10	T110C276K020AS	2.5	6	2291	2531	2771	3011	6086	7086	8086	T212C276K020(2)S
27.0	C	20	T110C276M020AS	2.5	6								
33.0	C	5	T110C336J020AS	3.0	6	5036	5236	5436	5636	6087	7087	8087	T212C336J020(2)S
33.0	C	10	T110C336K020AS	3.0	6	2292	2532	2772	3012	6088	7088	8088	T212C336K020(2)S
33.0	C	20	T110C336M020AS	3.0	6	2293	2533	2773	3013	6089	7089	8089	T212C336M020(2)S
39.0	C	5	T110C396J020AS	3.0	6	5037	5237	5437	5637	6090	7090	8090	T212C396J020(2)S
39.0	C	10	T110C396K020AS	3.0	6	2294	2534	2774	3014	6091	7091	8091	T212C396K020(2)S
39.0	C	20	T110C396M020AS	3.0	6								
47.0	**C**	**5**	**T110C476J020AS**	**4.5**	**6**	**5038**	**5238**	**5438**	**5638**	**6092**	**7092**	**8092**	**T212C476J020(2)S**
47.0	**C**	**10**	**T110C476K020AS**	**4.5**	**6**	**2295**	**2535**	**2775**	**3015**	**6093**	**7093**	**8093**	**T212C476K020(2)S**
47.0	**C**	**20**	**T110C476M020AS**	**4.5**	**6**	**2296**	**2536**	**2776**	**3016**	**6094**	**7094**	**8094**	**T212C476M020(2)S**
56.0	D	5	T110D566J020AS	5.5	6	5039	5239	5439	5639	6095	7095	8095	T212D566J020(2)S
56.0	D	10	T110D566K020AS	5.5	6	2297	2537	2777	3017	6096	7096	8096	T212D566K020(2)S
56.0	D	20	T110D566M020AS	5.5	6								
68.0	D	5	T110D686J020AS	6.0	6	5040	5240	5440	5640	6097	7097	8097	T212D686J020(2)S
68.0	D	10	T110D686K020AS	6.0	6	2298	2538	2778	3018	6098	7098	8098	T212D686K020(2)S
68.0	D	20	T110D686M020AS	6.0	6	2299	2539	2779	3019	6099	7099	8099	T212D686M020(2)S
82.0	D	5	T110D826J020AS	6.0	6	5041	5241	5441	5641	6100	7100	8100	T212D826J020(2)S
82.0	D	10	T110D826K020AS	6.0	6	2300	2540	2780	3020	6101	7101	8101	T212D826K020(2)S
82.0	D	20	T110D826M020AS	6.0	6								
100.0	**D**	**5**	**T110D107J020AS**	**10.0**	**6**	**5042**	**5242**	**5442**	**5642**	**6102**	**7102**	**8102**	**T212D107J020(2)S**
100.0	**D**	**10**	**T110D107K020AS**	**10.0**	**6**	**2301**	**2541**	**2781**	**3021**	**6103**	**7103**	**8103**	**T212D107K020(2)S**
100.0	**D**	**20**	**T110D107M020AS**	**10.0**	**6**	**2302**	**2542**	**2782**	**3022**	**6104**	**7104**	**8104**	**T212D107M020(2)S**
35 VOLT RATING AT 85°C — 23 VOLT RATING AT 125°C													
0.0047	A	5,10,20	T110A472(1)035AS	0.1	3								
0.0056	A	5,10,20	T110A562(1)035AS	0.1	3								
0.0068	A	5,10,20	T110A682(1)035AS	0.1	3								
0.0082	A	5,10,20	T110A822(1)035AS	0.1	3								
0.01	A	5,10,20	T110A103(1)035AS	0.1	3								
0.012	A	5,10,20	T110A123(1)035AS	0.1	3								
0.015	A	5,10,20	T110A153(1)035AS	0.1	3								
0.018	A	5,10,20	T110A183(1)035AS	0.1	3								
0.022	A	5,10,20	T110A223(1)035AS	0.1	3								
0.027	A	5,10,20	T110A273(1)035AS	0.1	3								
0.033	A	5,10,20	T110A333(1)035AS	0.1	3								
0.039	A	5,10,20	T110A393(1)035AS	0.1	3								
0.047	A	5,10,20	T110A473(1)035AS	0.1	3								
0.056	A	5,10,20	T110A563(1)035AS	0.1	3								

(1) To complete T110 Series part number, insert Capacitance Tolerance Symbol in the 9th Character as shown on Page 6.
(2) To complete the T212 Series Part Number, insert Failure Rate Symbol in the 13th Character.
Bold Face lines indicate popular part types and values.

RATINGS & PART NUMBER REFERENCE

CAPACITANCE µF	CASE SIZE	CAPACITANCE TOLERANCE ±%	KEMET T110 KEMET PART NUMBER	D.C. LEAKAGE µA@25°C MAX.	MAX. DISSIPATION FACTOR %@25°C, 120Hz	MIL-PRF-39003 (CSR13) CAPACITORS — DASH NUMBER REFERENCE FAILURE RATE LEVEL (%/1000 HRS.) — MIL-PRF-39003/1H EXPONENTIAL M (1.0)	P (0.1)	R (0.01)	S (0.001)	MIL-PRF-39003/1H GRADED B (0.1)	C (0.01)	D (0.001)	KEMET EQUIVALENT MILITARY PART NUMBER
35 VOLT RATING AT 85°C — 23 VOLT RATING AT 125° (Cont'd)													
0.068	A	5,10,20	T110A683(1)035AS	0.1	3								
0.082	A	5,10,20	T110A823(1)035AS	0.1	3								
0.1	**A**	**5,10,20**	**T110A104(1)035AS**	**0.5**	**3**								
0.12	A	5,10,20	T110A124(1)035AS	0.5	3								
0.15	A	5,10,20	T110A154(1)035AS	0.5	3								
0.18	A	5,10,20	T110A184(1)035AS	0.5	3								
0.22	**A**	**5,10,20**	**T110A224(1)035AS**	**0.5**	**3**								
0.27	A	5,10,20	T110A274(1)035AS	0.5	3								
0.33	**A**	**5,10,20**	**T110A334(1)035AS**	**0.5**	**3**								
0.39	A	5,10,20	T110A394(1)035AS	0.5	3								
0.47	A	5,10,20	T110A474(1)035AS	0.5	3								
0.56	A	5,10,20	T110A564(1)035AS	0.5	3								
0.68	**A**	**5,10,20**	**T110A684(1)035AS**	**0.5**	**3**								
0.82	A	5,10,20	T110A824(1)035AS	0.5	3								
1.0	**A**	**5,10,20**	**T110A105(1)035AS**	**0.5**	**3**								
1.2	B	5,10,20	T110B125(1)035AS	0.5	4								
1.5	B	5,10,20	T110B155(1)035AS	0.5	4								
1.8	B	5,10,20	T110B185(1)035AS	0.5	4								
2.2	B	5,10,20	T110B225(1)035AS	1.0	4								
2.7	B	5,10,20	T110B275(1)035AS	1.0	4								
3.3	**B**	**5,10,20**	**T110B335(1)035AS**	**1.0**	**4**								
3.9	B	5,10,20	T110B395(1)035AS	1.0	4								
4.7	**B**	**5,10,20**	**T110B475(1)035AS**	**1.0**	**4**								
5.6	B	5	T110B565J035AS	1.0	4	5043	5243	5443	5643	6105	7105	8105	T212B565J035(2)S
5.6	B	10	T110B565K035AS	1.0	4	2303	2543	2783	3023	6106	7106	8106	T212B565K035(2)S
5.6	B	20	T110B565M035AS	1.0	4								
6.8	**B**	**5**	**T110B685J035AS**	**1.5**	**4**	**5044**	**5244**	**5444**	**5644**	**6107**	**7107**	**8107**	**T212B685J035(2)S**
6.8	**B**	**10**	**T110B685K035AS**	**1.5**	**4**	**2304**	**2544**	**2784**	**3024**	**6108**	**7108**	**8108**	**T212B685K035(2)S**
6.8	**B**	**20**	**T110B685M035AS**	**1.5**	**4**	**2305**	**2545**	**2785**	**3025**	**6109**	**7109**	**8109**	**T212B685M035(2)S**
8.2	C	5,10,20	T110C825(1)035AS	3.0	4								
10.0	C	5,10,20	T110C106(1)035AS	3.0	4								
12.0	C	5,10,20	T110C126(1)035AS	3.0	4								
15.0	C	5,10,20	T110C156(1)035AS	3.0	4								
18.0	C	5,10,20	T110C186(1)035AS	3.0	4								
22.0	**C**	**5**	**T110C226J035AS**	**4.0**	**4**	**5045**	**5245**	**5445**	**5645**	**6110**	**7110**	**8110**	**T212C226J035(2)S**
22.0	**C**	**10**	**T110C226K035AS**	**4.0**	**4**	**2306**	**2546**	**2786**	**3026**	**6111**	**7111**	**8111**	**T212C226K035(2)S**
22.0	**C**	**20**	**T110C226M035AS**	**4.0**	**4**	**2307**	**2547**	**2787**	**3027**	**6112**	**7112**	**8112**	**T212C226M035(2)S**
27.0	D	5	T110D276J035AS	4.5	4	5046	5246	5446	5646	6113	7113	8113	T212D276J035(2)S
27.0	D	10	T110D276K035AS	4.5	4	2308	2548	2788	3028	6114	7114	8114	T212D276K035(2)S
27.0	D	20	T110D276M035AS	4.5	4								
33.0	**D**	**5**	**T110D336J035AS**	**5.5**	**4**	**5047**	**5247**	**5447**	**5647**	**6115**	**7115**	**8115**	**T212D336J035(2)S**
33.0	**D**	**10**	**T110D336K035AS**	**5.5**	**4**	**2309**	**2549**	**2789**	**3029**	**6116**	**7116**	**8116**	**T212D336K035(2)S**
33.0	**D**	**20**	**T110D336M035AS**	**5.5**	**4**	**2310**	**2550**	**2790**	**3030**	**6117**	**7117**	**8117**	**T212D336M035(2)S**
39.0	D	5	T110D396J035AS	6.0	4	5048	5248	5448	5648	6118	7118	8118	T212D396J035(2)S
39.0	D	10	T110D396K035AS	6.0	4	2311	2551	2791	3031	6119	7119	8119	T212D396K035(2)S
39.0	D	20	T110D396M035AS	6.0	4								
47.0	**D**	**5**	**T110D476J035AS**	**8.0**	**4**	**5049**	**5249**	**5449**	**5649**	**6120**	**7120**	**8120**	**T212D476J035(2)S**
47.0	**D**	**10**	**T110D476K035AS**	**8.0**	**4**	**2312**	**2552**	**2792**	**3032**	**6121**	**7121**	**8121**	**T212D476K035(2)S**
47.0	**D**	**20**	**T110D476M035AS**	**8.0**	**4**	**2313**	**2553**	**2793**	**3033**	**6122**	**7122**	**8122**	**T212D476M035(2)S**
50 VOLT RATING AT 85°C — 33 VOLT RATING AT 125°													
0.0047	A	5	T110A472J050AS	0.1	2	5050	5250	5450	5650	6123	7123	8123	T212A472J050(2)S
0.0047	A	10	T110A472K050AS	0.1	2	2314	2554	2794	3034	6124	7124	8124	T212A472K050(2)S
0.0047	A	20	T110A472M050AS	0.1	2	2315	2555	2795	3035	6125	7125	8125	T212A472M050(2)S
0.0056	A	5	T110A562J050AS	0.1	2	5051	5251	5451	5651	6126	7126	8126	T212A562J050(2)S
0.0056	A	10	T110A562K050AS	0.1	2	2316	2556	2796	3036	6127	7127	8127	T212A562K050(2)S
0.0056	A	20	T110A562M050AS	0.1	2								
0.0068	A	5	T110A682J050AS	0.1	2	5052	5252	5452	5652	6128	7128	8128	T212A682J050(2)S
0.0068	A	10	T110A682K050AS	0.1	2	2317	2557	2797	3037	6129	7129	8129	T212A682K050(2)S
0.0068	A	20	T110A682M050AS	0.1	2	2318	2558	2798	3038	6130	7130	8130	T212A682M050(2)S

(1) To complete T110 Series Part Number, insert Capacitance Tolerance Symbol in the 9th Character as shown on Page 6.
(2) To complete the T212 Series Part Number, insert Failure Rate Symbol in the 13th Character.
Bold Face lines indicate popular part types and values.

RATINGS & PART NUMBER REFERENCE

CAPACITANCE µF	CASE SIZE	CAPACITANCE TOLERANCE ±%	KEMET T110 KEMET PART NUMBER	D.C. LEAKAGE µA@25°C MAX.	MAX. DISSIPATION FACTOR %@25°C, 120Hz	MIL-PRF-39003 (CSR13) CAPACITORS — DASH NUMBER REFERENCE FAILURE RATE LEVEL (%/1000 HRS.) — MIL-PRF-39003/1H EXPONENTIAL M (1.0)	P (0.1)	R (0.01)	S (0.001)	MIL-PRF-39003/1H GRADED B (0.1)	C (0.01)	D (0.001)	KEMET EQUIVALENT MILITARY PART NUMBER
50 VOLT RATING AT 85°C — 33 VOLT RATING AT 125°C (Cont'd)													
0.0082	A	5	T110A822J050AS	0.1	2	5053	5253	5453	5653	6131	7131	8131	T212A822J050(2)S
0.0082	A	10	T110A822K050AS	0.1	2	2319	2559	2799	3039	6132	7132	8132	T212A822K050(2)S
0.0082	A	20	T110A822M050AS	0.1	2								
0.01	A	5	T110A103J050AS	0.1	2	5054	5254	5454	5654	6133	7133	8133	T212A103J050(2)S
0.01	A	10	T110A103K050AS	0.1	2	2320	2560	2800	3040	6134	7134	8134	T212A103K050(2)S
0.01	A	20	T110A103M050AS	0.1	2	2321	2561	2801	3041	6135	7135	8135	T212A103M050(2)S
0.012	A	5	T110A123J050AS	0.1	2	5055	5255	5455	5655	6136	7136	8136	T212A123J050(2)S
0.012	A	10	T110A123K050AS	0.1	2	2322	2562	2802	3042	6137	7137	8137	T212A123K050(2)S
0.012	A	20	T110A123M050AS	0.1	2								
0.015	A	5	T110A153J050AS	0.1	2	5056	5256	5456	5656	6138	7138	8138	T212A153J050(2)S
0.015	A	10	T110A153K050AS	0.1	2	2323	2563	2803	3043	6139	7139	8139	T212A153K050(2)S
0.015	A	20	T110A153M050AS	0.1	2	2324	2564	2804	3044	6140	7140	8140	T212A153M050(2)S
0.018	A	5	T110A183J050AS	0.1	2	5057	5257	5457	5657	6141	7141	8141	T212A183J050(2)S
0.018	A	10	T110A183K050AS	0.1	2	2325	2565	2805	3045	6142	7142	8142	T212A183K050(2)S
0.018	A	20	T110A183M050AS	0.1	2								
0.022	A	5	T110A223J050AS	0.1	2	5058	5258	5458	5658	6143	7143	8143	T212A223J050(2)S
0.022	A	10	T110A223K050AS	0.1	2	2326	2566	2806	3046	6144	7144	8144	T212A223K050(2)S
0.022	A	20	T110A223M050AS	0.1	2	2327	2567	2807	3047	6145	7145	8145	T212A223M050(2)S
0.027	A	5	T110A273J050AS	0.1	2	5059	5259	5459	5659	6146	7146	8146	T212A273J050(2)S
0.027	A	10	T110A273K050AS	0.1	2	2328	2568	2808	3048	6147	7147	8147	T212A273K050(2)S
0.027	A	20	T110A273M050AS	0.1	2								
0.033	A	5	T110A333J050AS	0.1	2	5060	5260	5460	5660	6148	7148	8148	T212A333J050(2)S
0.033	A	10	T110A333K050AS	0.1	2	2329	2569	2809	3049	6149	7149	8149	T212A333K050(2)S
0.033	A	20	T110A333M050AS	0.1	2	2330	2570	2810	3050	6150	7150	8150	T212A333M050(2)S
0.039	A	5	T110A393J050AS	0.1	2	5061	5261	5461	5661	6151	7151	8151	T212A393J050(2)S
0.039	A	10	T110A393K050AS	0.1	2	2331	2571	2811	3051	6152	7152	8152	T212A393K050(2)S
0.039	A	20	T110A393M050AS	0.1	2								
0.047	A	5	T110A473J050AS	0.1	2	5062	5262	5462	5662	6153	7153	8153	T212A473J050(2)S
0.047	A	10	T110A473K050AS	0.1	2	2332	2572	2812	3052	6154	7154	8154	T212A473K050(2)S
0.047	A	20	T110A473M050AS	0.1	2	2333	2573	2813	3053	6155	7155	8155	T212A473M050(2)S
0.056	A	5	T110A563J050AS	0.1	2	5063	5263	5463	5663	6156	7156	8156	T212A563J050(2)S
0.056	A	10	T110A563K050AS	0.1	2	2334	2574	2814	3054	6157	7157	8157	T212A563K050(2)S
0.056	A	20	T110A563M050AS	0.1	2								
0.068	A	5	T110A683J050AS	0.1	2	5064	5264	5464	5664	6158	7158	8158	T212A683J050(2)S
0.068	A	10	T110A683K050AS	0.1	2	2335	2575	2815	3055	6159	7159	8159	T212A683K050(2)S
0.068	A	20	T110A683M050AS	0.1	2	2336	2576	2816	3056	6160	7160	8160	T212A683M050(2)S
0.082	A	5	T110A823J050AS	0.1	2	5065	5265	5465	5665	6161	7161	8161	T212A823J050(2)S
0.082	A	10	T110A823K050AS	0.1	2	2337	2577	2817	3057	6162	7162	8162	T212A823K050(2)S
0.082	A	20	T110A823M050AS	0.1	2								
0.1	A	5	T110A104J050AS	0.3	2	5066	5266	5466	5666	6163	7163	8163	T212A104J050(2)S
0.1	A	10	T110A104K050AS	0.3	2	2338	2578	2818	3058	6164	7164	8164	T212A104K050(2)S
0.1	A	20	T110A104M050AS	0.3	2	2339	2579	2819	3059	6165	7165	8165	T212A104M050(2)S
0.12	A	5	T110A124J050AS	0.3	2	5067	5267	5467	5667	6166	7166	8166	T212A124J050(2)S
0.12	A	10	T110A124K050AS	0.3	2	2340	2580	2820	3060	6167	7167	8167	T212A124K050(2)S
0.12	A	20	T110A124M050AS	0.3	2								
0.15	A	5	T110A154J050AS	0.3	2	5068	5268	5468	5668	6168	7168	8168	T212A154J050(2)S
0.15	A	10	T110A154K050AS	0.3	2	2341	2581	2821	3061	6169	7169	8169	T212A154K050(2)S
0.15	A	20	T110A154M050AS	0.3	2	2342	2582	2822	3062	6170	7170	8170	T212A154M050(2)S
0.18	A	5	T110A184J050AS	0.3	2	5069	5269	5469	5669	6171	7171	8171	T212A184J050(2)S
0.18	A	10	T110A184K050AS	0.3	2	2343	2583	2823	3063	6172	7172	8172	T212A184K050(2)S
0.18	A	20	T110A184M050AS	0.3	2								
0.22	A	5	T110A224J050AS	0.3	2	5070	5270	5470	5670	6173	7173	8173	T212A224J050(2)S
0.22	A	10	T110A224K050AS	0.3	2	2344	2584	2824	3064	6174	7174	8174	T212A224K050(2)S
0.22	A	20	T110A224M050AS	0.3	2	2345	2585	2825	3065	6175	7175	8175	T212A224M050(2)S
0.27	A	5	T110A274J050AS	0.3	2	5071	5271	5471	5671	6176	7176	8176	T212A274J050(2)S
0.27	A	10	T110A274K050AS	0.3	2	2346	2586	2826	3066	6177	7177	8177	T212A274K050(2)S
0.27	A	20	T110A274M050AS	0.3	2								
0.33	A	5	T110A334J050AS	0.3	2	5072	5272	5472	5672	6178	7178	8178	T212A334J050(2)S
0.33	A	10	T110A334K050AS	0.3	2	2347	2587	2827	3067	6179	7179	8179	T212A334K050(2)S
0.33	A	20	T110A334M050AS	0.3	2	2348	2588	2828	3068	6180	7180	8180	T212A334M050(2)S
0.39	A	5	T110A394J050AS	0.3	2	5073	5273	5473	5673	6181	7181	8181	T212A394J050(2)S

(1) To complete T110 Series part number, insert Capacitance Tolerance Symbol in the 9th Character as shown on Page 6.
(2) To complete the T212 Series Part Number, insert Failure Rate Symbol in the 13th Character.
Bold Face lines indicate popular part types and values.

RATINGS & PART NUMBER REFERENCE

CAPACITANCE µF	CASE SIZE	CAPACITANCE TOLERANCE ±%	KEMET T110 KEMET PART NUMBER	D.C. LEAKAGE µA@25°C MAX.	MAX. DISSIPATION FACTOR %@25°C, 120Hz	MIL-PRF-39003 (CSR13) CAPACITORS — DASH NUMBER REFERENCE FAILURE RATE LEVEL (%/1000 HRS.) — MIL-PRF-39003/1H EXPONENTIAL M (1.0)	P (0.1)	R (0.01)	S (0.001)	MIL-PRF-39003/1H GRADED B (0.1)	C (0.01)	D (0.001)	KEMET EQUIVALENT MILITARY PART NUMBER
50 VOLT RATING AT 85°C — 33 VOLT RATING AT 125°C (Cont'd)													
0.39	A	10	T110A394K050AS	0.3	2	2349	2589	2829	3069	6182	7182	8182	T212A394K050(2)S
0.39	A	20	T110A394M050AS	0.3	2								
0.47	**A**	**5**	**T110A474J050AS**	**0.3**	**2**	**5074**	**5274**	**5474**	**5674**	**6183**	**7183**	**8183**	**T212A474J050(2)S**
0.47	**A**	**10**	**T110A474K050AS**	**0.3**	**2**	**2350**	**2590**	**2830**	**3070**	**6184**	**7184**	**8184**	**T212A474K050(2)S**
0.47	**A**	**20**	**T110A474M050AS**	**0.3**	**2**	**2351**	**2591**	**2831**	**3071**	**6185**	**7185**	**8185**	**T212A474M050(2)S**
0.56	A	5	T110A564J050AS	0.3	2	5075	5275	5475	5675	6186	7186	8186	T212A564J050(2)S
0.56	A	10	T110A564K050AS	0.3	2	2352	2592	2832	3072	6187	7187	8187	T212A564K050(2)S
0.56	A	20	T110A564M050AS	0.3	2								
0.68	**A**	**5**	**T110A684J050AS**	**0.3**	**2**	**5076**	**5276**	**5476**	**5676**	**6188**	**7188**	**8188**	**T212A684J050(2)S**
0.68	**A**	**10**	**T110A684K050AS**	**0.3**	**2**	**2353**	**2593**	**2833**	**3073**	**6189**	**7189**	**8189**	**T212A684K050(2)S**
0.68	**A**	**20**	**T110A684M050AS**	**0.3**	**2**	**2354**	**2594**	**2834**	**3074**	**6190**	**7190**	**8190**	**T212A684M050(2)S**
0.82	A	5	T110A824J050AS	0.3	2	5077	5277	5477	5677	6191	7191	8191	T212A824J050(2)S
0.82	A	10	T110A824K050AS	0.3	2	2355	2595	2835	3075	6192	7192	8192	T212A824K050(2)S
0.82	A	20	T110A824M050AS	0.3	2								
1.0	**A**	**5**	**T110A105J050AS**	**0.4**	**2**	**5078**	**5278**	**5478**	**5678**	**6193**	**7193**	**8193**	**T212A105J050(2)S**
1.0	**A**	**10**	**T110A105K050AS**	**0.4**	**2**	**2356**	**2596**	**2836**	**3076**	**6194**	**7194**	**8194**	**T212A105K050(2)S**
1.0	**A**	**20**	**T110A105M050AS**	**0.4**	**2**	**2357**	**2597**	**2837**	**3077**	**6195**	**7195**	**8195**	**T212A105M050(2)S**
1.2	B	5	T110B125J050AS	0.4	4	5079	5279	5479	5679	6196	7196	8196	T212B125J050(2)S
1.2	B	10	T110B125K050AS	0.4	4	2358	2598	2838	3078	6197	7197	8197	T212B125K050(2)S
1.2	B	20	T110B125M050AS	0.4	4								
1.5	B	5	T110B155J050AS	0.5	4	5080	5280	5480	5680	6198	7198	8198	T212B155J050(2)S
1.5	B	10	T110B155K050AS	0.5	4	2359	2599	2839	3079	6199	7199	8199	T212B155K050(2)S
1.5	B	20	T110B155M050AS	0.5	4	2360	2600	2840	3080	6200	7200	8200	T212B155M050(2)S
1.8	B	5	T110B185J050AS	0.5	4	5081	5281	5481	5681	6201	7201	8201	T212B185J050(2)S
1.8	B	10	T110B185K050AS	0.5	4	2361	2601	2841	3081	6202	7202	8202	T212B185K050(2)S
1.8	B	20	T110B185M050AS	0.5	4								
2.2	**B**	**5**	**T110B225J050AS**	**0.8**	**4**	**5082**	**5282**	**5482**	**5682**	**6203**	**7203**	**8203**	**T212B225J050(2)S**
2.2	**B**	**10**	**T110B225K050AS**	**0.8**	**4**	**2362**	**2602**	**2842**	**3082**	**6204**	**7204**	**8204**	**T212B225K050(2)S**
2.2	**B**	**20**	**T110B225M050AS**	**0.8**	**4**	**2363**	**2603**	**2843**	**3083**	**6205**	**7205**	**8205**	**T212B225M050(2)S**
2.7	B	5	T110B275J050AS	0.8	4	5083	5283	5483	5683	6206	7206	8206	T212B275J050(2)S
2.7	B	10	T110B275K050AS	0.8	4	2364	2604	2844	3084	6207	7207	8207	T212B275K050(2)S
2.7	B	20	T110B275M050AS	0.8	4								
3.3	B	5	T110B335J050AS	1.2	4	5084	5284	5484	5684	6208	7208	8208	T212B335J050(2)S
3.3	B	10	T110B335K050AS	1.2	4	2365	2605	2845	3085	6209	7209	8209	T212B335K050(2)S
3.3	B	20	T110B335M050AS	1.2	4	2366	2606	2846	3086	6210	7210	8210	T212B335M050(2)S
3.9	B	5	T110B395J050AS	1.5	4	5085	5285	5485	5685	6211	7211	8211	T212B395J050(2)S
3.9	B	10	T110B395K050AS	1.5	4	2367	2607	2847	3087	6212	7212	8212	T212B395K050(2)S
3.9	B	20	T110B395M050AS	1.5	4								
4.7	**B**	**5**	**T110B475J050AS**	**1.7**	**4**	**5086**	**5286**	**5486**	**5686**	**6213**	**7213**	**8213**	**T212B475J050(2)S**
4.7	**B**	**10**	**T110B475K050AS**	**1.7**	**4**	**2368**	**2608**	**2848**	**3088**	**6214**	**7214**	**8214**	**T212B475K050(2)S**
4.7	**B**	**20**	**T110B475M050AS**	**1.7**	**4**	**2369**	**2609**	**2849**	**3089**	**6215**	**7215**	**8215**	**T212B475M050(2)S**
5.6	C	5	T110C565J050AS	2.2	4	5087	5287	5487	5687	6216	7216	8216	T212C565J050(2)S
5.6	C	10	T110C565K050AS	2.2	4	2370	2610	2850	3090	6217	7217	8217	T212C565K050(2)S
5.6	C	20	T110C565M050AS	2.2	4								
6.8	C	5	T110C685J050AS	2.2	4	5088	5288	5488	5688	6218	7218	8218	T212C685J050(2)S
6.8	C	10	T110C685K050AS	2.2	4	2371	2611	2851	3091	6219	7219	8219	T212C685K050(2)S
6.8	C	20	T110C685M050AS	2.2	4	2372	2612	2852	3092	6220	7220	8220	T212C685M050(2)S
8.2	C	5	T110C825J050AS	2.5	4	5089	5289	5489	5689	6221	7221	8221	T212C825J050(2)S
8.2	C	10	T110C825K050AS	2.5	4	2373	2613	2853	3093	6222	7222	8222	T212C825K050(2)S
8.2	C	20	T110C825M050AS	2.5	4								
10.0	C	5	T110C106J050AS	2.5	4	5090	5290	5490	5690	6223	7223	8223	T212C106J050(2)S
10.0	C	10	T110C106K050AS	2.5	4	2374	2614	2854	3094	6224	7224	8224	T212C106K050(2)S
10.0	C	20	T110C106M050AS	2.5	4	2375	2615	2855	3095	6225	7225	8225	T212C106M050(2)S
12.0	C	5	T110C126J050AS	3.0	4	5091	5291	5491	5691	6226	7226	8226	T212C126J050(2)S
12.0	C	10	T110C126K050AS	3.0	4	2376	2616	2856	3096	6227	7227	8227	T212C126K050(2)S
12.0	C	20	T110C126M050AS	3.0	4								
15.0	C	5	T110C156J050AS	4.0	4	5092	5292	5492	5692	6228	7228	8228	T212C156J050(2)S
15.0	C	10	T110C156K050AS	4.0	4	2377	2617	2857	3097	6229	729	8229	T212C156K050(2)S
15.0	C	20	T110C156M050AS	4.0	4	2378	2618	2858	3098	6230	7230	8230	T212C156M050(2)S
18.0	C	5	T110C186J050AS	4.5	4	5093	5293	5493	5693	6231	7231	8231	T212C186J050(2)S

(1) To complete T110 Series part number, insert Capacitance Tolerance Symbol in the 9th Character as shown on Page 6.
(2) To complete the T212 Series Part Number, insert Failure Rate Symbol in the 13th Character.
Bold Face lines indicate popular part type and values.

RATINGS & PART NUMBER REFERENCE

CAPACITANCE µF	CASE SIZE	CAPACITANCE TOLERANCE ±%	KEMET T110 KEMET PART NUMBER	D.C. LEAKAGE µA@25°C MAX.	MAX. DISSIPATION FACTOR %@25°C, 120Hz	MIL-PRF-39003 (CSR13) CAPACITORS — DASH NUMBER REFERENCE FAILURE RATE LEVEL (%/1000 HRS.) — MIL-PRF-39003/1H EXPONENTIAL M (1.0)	P (0.1)	R (0.01)	S (0.001)	MIL-PRF-39003/1H GRADED B (0.1)	C (0.01)	D (0.001)	KEMET EQUIVALENT MILITARY PART NUMBER
50 VOLT RATING AT 85°C — 33 VOLT RATING AT 125°C (Cont'd)													
18.0	C	10	T110C186K050AS	4.5	4	2379	2619	2859	3099	6232	7232	8232	T212C186K050(2)S
18.0	C	20	T110C186M050AS	4.5	4								
22.0	**D**	**5**	**T110D226J050AS**	**5.5**	**4**	**5094**	**5294**	**5494**	**5694**	**6233**	**7233**	**8233**	**T212D226J050(2)S**
22.0	**D**	**10**	**T110D226K050AS**	**5.5**	**4**	**2380**	**2620**	**2860**	**3100**	**6234**	**7234**	**8234**	**T212D226K050(2)S**
22.0	**D**	**20**	**T110D226M050AS**	**5.5**	**4**	**2381**	**2621**	**2861**	**3101**	**6235**	**7235**	**8235**	**T212D226M050(2)S**
60 VOLT RATING AT 85°C — 40 VOLT RATING AT 125°C													
0.0047	A	5,10,20	T110A472(1)060AS	0.3	3								
0.0056	A	5,10,20	T110A562(1)060AS	0.3	3								
0.0068	A	5,10,20	T110A682(1)060AS	0.3	3								
0.0082	A	5,10,20	T110A822(1)060AS	0.3	3								
0.01	A	5,10,20	T110A103(1)060AS	0.3	3								
0.012	A	5,10,20	T110A123(1)060AS	0.3	3								
0.015	A	5,10,20	T110A153(1)060AS	0.3	3								
0.018	A	5,10,20	T110A183(1)060AS	0.3	3								
0.022	A	5,10,20	T110A223(1)060AS	0.3	3								
0.027	A	5,10,20	T110A273(1)060AS	0.3	3								
0.033	A	5,10,20	T110A333(1)060AS	0.3	3								
0.039	A	5,10,20	T110A393(1)060AS	0.3	3								
0.047	A	5,10,20	T110A473(1)060AS	0.3	3								
0.056	A	5,10,20	T110A563(1)060AS	0.3	3								
0.068	A	5,10,20	T110A683(1)060AS	0.3	3								
0.082	A	5,10,20	T110A823(1)060AS	0.3	3								
0.1	A	5,10,20	T110A104(1)060AS	0.5	3								
0.12	A	5,10,20	T110A124(1)060AS	0.5	3								
0.15	A	5,10,20	T110A154(1)060AS	0.5	3								
0.18	A	5,10,20	T110A184(1)060AS	0.5	3								
0.22	A	5,10,20	T110A224(1)060AS	0.5	3								
0.27	A	5,10,20	T110A274(1)060AS	0.5	3								
0.33	A	5,10,20	T110A334(1)060AS	0.5	3								
0.39	A	5,10,20	T110A394(1)060AS	0.5	3								
0.47	A	5,10,20	T110A474(1)060AS	0.5	3								
0.56	A	5,10,20	T110A564(1)060AS	0.5	3								
0.68	A	5,10,20	T110A684(1)060AS	0.5	3								
0.82	B	5,10,20	T110B824(1)060AS	0.5	3								
1.0	B	5,10,20	T110B105(1)060AS	0.5	3								
1.2	B	5,10,20	T110B125(1)060AS	0.5	4								
1.5	B	5,10,20	T110B155(1)060AS	0.5	4								
1.8	B	5,10,20	T110B185(1)060AS	0.5	4								
2.2	B	5,10,20	T110B225(1)060AS	1.0	4								
2.7	B	5,10,20	T110B275(1)060AS	1.0	4								
3.3	B	5,10,20	T110B335(1)060AS	1.5	4								
3.9	B	5,10,20	T110B395(1)060AS	1.5	4								
4.7	C	5,10,20	T110C475(1)060AS	2.0	4								
5.6	C	5,10,20	T110C565(1)060AS	2.0	4								
6.8	C	5,10,20	T110C685(1)060AS	3.0	4								
8.2	C	5,10,20	T110C825(1)060AS	4.0	4								
10.0	C	5,10,20	T110C106(1)060AS	5.0	4								
12.0	C	5,10,20	T110C126(1)060AS	5.0	4								
15.0	D	5,10,20	T110D156(1)060AS	4.0	4								
18.0	D	5,10,20	T110D186(1)060AS	5.0	4								
22.0	D	5,10,20	T110D226(1)060AS	6.0	4								
75 VOLT RATING AT 85°C — 50 VOLT RATING AT 125°C													
0.0047	A	5,10,20	T110A472(1)075AS	0.3	2								
0.0056	A	5,10,20	T110A562(1)075AS	0.3	2								
0.0068	A	5,10,20	T110A682(1)075AS	0.3	2								
0.0082	A	5,10,20	T110A822(1)075AS	0.3	2								
0.01	A	5,10,20	T110A103(1)075AS	0.3	2								

(1) To complete T110 Series part number, insert Capacitance Tolerance Symbol in the 9th Character as shown on Page 6.
(2) To complete the T212 Series Part Number, insert Failure Rate Symbol in the 13th Character.
Bold Face lines indicate popular part types and values.

RATINGS & PART NUMBER REFERENCE

CAPACITANCE µF	CASE SIZE	CAPACITANCE TOLERANCE ±%	KEMET T110 KEMET PART NUMBER	D.C. LEAKAGE µA@25°C MAX.	MAX. DISSIPATION FACTOR %@25°C, 120Hz	MIL-PRF-39003 (CSR13) CAPACITORS — DASH NUMBER REFERENCE FAILURE RATE LEVEL (%/1000 HRS.) — MIL-PRF-39003/1H EXPONENTIAL M (1.0)	P (0.1)	R (0.01)	S (0.001)	MIL-PRF-39003/1H GRADED B (0.1)	C (0.01)	D (0.001)	KEMET EQUIVALENT MILITARY PART NUMBER
75 VOLT RATING AT 85°C — 50 VOLT RATING AT 125°C (Cont'd)													
0.012	A	5,10,20	T110A123(1)075AS	0.3	2								
0.015	A	5,10,20	T110A153(1)075AS	0.3	2								
0.018	A	5,10,20	T110A183(1)075AS	0.3	2								
0.022	A	5,10,20	T110A223(1)075AS	0.3	2								
0.027	A	5,10,20	T110A273(1)075AS	0.3	2								
0.033	A	5,10,20	T110A333(1)075AS	0.3	2								
0.039	A	5,10,20	T110A393(1)075AS	0.3	2								
0.047	A	5,10,20	T110A473(1)075AS	0.3	2								
0.056	A	5,10,20	T110A563(1)075AS	0.3	2								
0.068	A	5,10,20	T110A683(1)075AS	0.3	2								
0.082	A	5,10,20	T110A823(1)075AS	0.3	2								
0.1	A	5	T110A104J075AS	0.3	2	5095	5295	5495	5695	6236	7236	8236	T212A104J075(2)S
0.1	A	10	T110A104K075AS	0.3	2	2382	2622	2862	3102	6237	7237	8237	T212A104K075(2)S
0.1	A	20	T110A104M075AS	0.3	2	2383	2623	2863	3103	6238	7238	8238	T212A104M075(2)S
0.12	A	5	T110A124J075AS	0.3	2	5096	5296	5496	5696	6239	7239	8239	T212A124J075(2)S
0.12	A	10	T110A124K075AS	0.3	2	2384	2624	2864	3104	6240	7240	8240	T212A124K075(2)S
0.12	A	20	T110A124M075AS	0.3	2								
0.15	A	5	T110A154J075AS	0.3	2	5097	5297	5497	5697	6241	7241	8241	T212A154J075(2)S
0.15	A	10	T110A154K075AS	0.3	2	2385	2625	2865	3105	6242	7242	8242	T212A154K075(2)S
0.15	A	20	T110A154M075AS	0.3	2	2386	2626	2866	3106	6243	7243	8243	T212A154M075(2)S
0.18	A	5	T110A184J075AS	0.3	2	5098	5298	5498	5698	6244	7244	8244	T212A184J075(2)S
0.18	A	10	T110A184K075AS	0.3	2	2387	2627	2867	3107	6245	7245	8245	T212A184K075(2)S
0.18	A	20	T110A184M075AS	0.3	2								
0.22	A	5	T110A224J075AS	0.3	2	5099	5299	5499	5699	6246	7246	8246	T212A224J075(2)S
0.22	A	10	T110A224K075AS	0.3	2	2388	2628	2868	3108	6247	7247	8247	T212A224K075(2)S
0.22	A	20	T110A224M075AS	0.3	2	2389	2629	2869	3109	6248	7248	8248	T212A224M075(2)S
0.27	A	5	T110A274J075AS	0.3	2	5100	5300	5500	5700	6249	7249	8249	T212A274J075(2)S
0.27	A	10	T110A274K075AS	0.3	2	2390	2630	2870	3110	6250	7250	8250	T212A274K075(2)S
0.27	A	20	T110A274M075AS	0.3	2								
0.33	A	5	T110A334J075AS	0.3	2	5101	5301	5501	5701	6251	7251	8251	T212A334J075(2)S
0.33	A	10	T110A334K075AS	0.3	2	2391	2631	2871	3111	6252	7252	8252	T212A334K075(2)S
0.33	A	20	T110A334M075AS	0.3	2	2392	2632	2872	3112	6253	7253	8253	T212A334M075(2)S
0.39	A	5	T110A394J075AS	0.3	2	5102	5302	5502	5702	6254	7254	8254	T212A394J075(2)S
0.39	A	10	T110A394K075AS	0.3	2	2393	2633	2873	3113	6255	7255	8255	T212A394K075(2)S
0.39	A	20	T110A394M075AS	0.3	2								
0.47	A	5	T110A474J075AS	0.3	2	5103	5303	5503	5703	6256	7256	8256	T212A474J075(2)S
0.47	A	10	T110A474K075AS	0.3	2	2394	2634	2874	3114	6257	7257	8257	T212A474K075(2)S
0.47	A	20	T110A474M075AS	0.3	2	2395	2635	2875	3115	6258	7258	8258	T212A474M075(2)S
0.56	A	5	T110A564J075AS	0.3	2	5104	5304	5504	5704	6259	7259	8259	T212A564J075(2)S
0.56	A	10	T110A564K075AS	0.3	2	2396	2636	2876	3116	6260	7260	8260	T212A564K075(2)S
0.56	A	20	T110A564M075AS	0.3	2								
0.68	A	5	T110A684J075AS	0.3	2	5105	5305	5505	5705	6261	7261	8261	T212A684J075(2)S
0.68	A	10	T110A684K075AS	0.3	2	2397	2637	2877	3117	6262	7262	8262	T212A684K075(2)S
0.68	A	20	T110A684M075AS	0.3	2	2398	2638	2878	3118	6263	7263	8263	T212A684M075(2)S
0.82	B	5	T110B824J075AS	0.3	2	5106	5306	5506	5706	6264	7264	8264	T212B824J075(2)S
0.82	B	10	T110B824K075AS	0.3	2	2399	2639	2879	3119	6265	7265	8265	T212B824K075(2)S
0.82	B	20	T110B824M075AS	0.3	2								
1.0	B	5	T110B105J075AS	0.3	2	5107	5307	5507	5707	6266	7266	8266	T212B105J075(2)S
1.0	B	10	T110B105K075AS	0.3	2	2400	2640	2880	3120	6267	7267	8267	T212B105K075(2)S
1.0	B	20	T110B105M075AS	0.3	2	2401	2641	2881	3121	6268	7268	8268	T212B105M075(2)S
1.2	B	5	T110B125J075AS	0.3	4	5108	5308	5508	5708	6269	7269	8269	T212B125J075(2)S
1.2	B	10	T110B125K075AS	0.3	4	2402	2642	2882	3122	6270	7270	8270	T212B125K075(2)S
1.2	B	20	T110B125M075AS	0.3	4								
1.5	B	5	T110B155J075AS	0.6	4	5109	5309	5509	5709	6271	7271	8271	T212B155J075(2)S
1.5	B	10	T110B155K075AS	0.6	4	2403	2643	2883	3123	6272	7272	8272	T212B155K075(2)S
1.5	B	20	T110B155M075AS	0.6	4	2404	2644	2884	3124	6273	7273	8273	T212B155M075(2)S
1.8	B	5	T110B185J075AS	0.7	4	5110	5310	5510	5710	6274	7274	8274	T212B185J075(2)S
1.8	B	10	T110B185K075AS	0.7	4	2405	2645	2885	3125	6275	7275	8275	T212B185K075(2)S
1.8	B	20	T110B185M075AS	0.7	4								
2.2	B	5	T110B225J075AS	0.8	4	5111	5311	5511	5711	6276	7276	8276	T212B225J075(2)S
2.2	B	10	T110B225K075AS	0.8	4	2406	2646	2886	3126	6277	7277	8277	T212B225K075(2)S

(1) To complete T110 Series part number, insert Capacitance Tolerance Symbol in the 9th Character as shown on Page 6.
(2) To complete the T212 Series Part Number, insert Failure Rate Symbol in the 13th Character.
Bold Face lines indicate popular part types and values.

RATINGS & PART NUMBER REFERENCE

CAPACITANCE µF	CASE SIZE	CAPACITANCE TOLERANCE ±%	KEMET T110 KEMET PART NUMBER	D.C. LEAKAGE µA@25°C MAX.	MAX. DISSIPATION FACTOR %@25°C, 120Hz	MIL-PRF-39003 (CSR13) CAPACITORS — DASH NUMBER REFERENCE FAILURE RATE LEVEL (%/1000 HRS.) — MIL-PRF-39003/1H EXPONENTIAL M (1.0)	P (0.1)	R (0.01)	S (0.001)	MIL-PRF-39003/1H GRADED B (0.1)	C (0.01)	D (0.001)	KEMET EQUIVALENT MILITARY PART NUMBER
75 VOLT RATING AT 85°C — 50 VOLT RATING AT 125°C (Cont'd)													
2.2	B	20	T110B225M075AS	0.8	4	2407	2647	2887	3127	6278	7278	8278	T212B225M075(2)S
2.7	B	5	T110B275J075AS	1.0	4	5112	5312	5512	5712	6279	7279	8279	T212B275J075(2)S
2.7	B	10	T110B275K075AS	1.0	4	2408	2648	2888	3128	6280	7280	8280	T212B275K075(2)S
2.7	B	20	T110B275M075AS	1.2	4								
3.3	B	5	T110B335J075AS	1.2	4	5113	5313	5513	5713	6281	7281	8281	T212B335J075(2)S
3.3	B	10	T110B335K075AS	1.2	4	2409	2649	2889	3129	6282	7282	8282	T212B335K075(2)S
3.3	B	20	T110B335M075AS	1.2	4	2410	2650	2890	3130	6283	7283	8283	T212B335M075(2)S
3.9	B	5	T110B395J075AS	1.5	4	5114	5314	5514	5714	6284	7284	8284	T212B395J075(2)S
3.9	B	10	T110B395K075AS	1.5	4	2411	2651	2891	3131	6285	7285	8285	T212B395K075(2)S
3.9	B	20	T110B395M075AS	1.5	4								
4.7	C	5	T110C475J075AS	3.0	4	5115	5315	5515	5715	6286	7286	8286	T212C475J075(2)S
4.7	C	10	T110C475K075AS	3.0	4	2412	2652	2892	3132	6287	7287	8287	T212C475K075(2)S
4.7	C	20	T110C475M075AS	3.0	4	2413	2653	2893	3133	6288	7288	8288	T212C475M075(2)S
5.6	C	5	T110C565J075AS	3.0	4	5116	5316	5516	5716	6289	7289	8289	T212C565J075(2)S
5.6	C	10	T110C565K075AS	3.0	4	2414	2654	2894	3134	6290	7290	8290	T212C565K075(2)S
5.6	C	20	T110C565M075AS	3.0	4								
6.8	C	5	T110C685J075AS	5.0	4	5117	5317	5517	5717	6291	7291	8291	T212C685J075(2)S
6.8	C	10	T110C685K075AS	5.0	4	2415	2655	2895	3135	6292	7292	8292	T212C685K075(2)S
6.8	C	20	T110C685M075AS	5.0	4	2416	2656	2896	3136	6293	7293	8293	T212C685M075(2)S
8.2	C	5	T110C825J075AS	5.0	4	5118	5318	5518	5718	6294	7294	8294	T212C825J075(2)S
8.2	C	10	T110C825K075AS	5.0	4	2417	2657	2897	3137	6295	7295	8295	T212C825K075(2)S
8.2	C	20	T110C825M075AS	5.0	4								
10.0	C	5	T110C106J075AS	5.0	4	5119	5319	5519	5719	6296	7296	8296	T212C106J075(2)S
10.0	C	10	T110C106K075AS	5.0	4	2418	2658	2898	3138	6297	7297	8297	T212C106K075(2)S
10.0	C	20	T110C106M075AS	5.0	4	2419	2659	2899	3139	6298	7298	8298	T212C106M075(2)S
12.0	D	5	T110D126J075AS	5.0	4	5120	5320	5520	5720	6299	7299	8299	T212D126J075(2)S
12.0	D	10	T110D126K075AS	5.0	4	2420	2660	2900	3140	6300	7300	8300	T212D126K075(2)S
12.0	D	20	T110D126M075AS	5.0	4								
15.0	D	5	T110D156J075AS	7.0	4	5121	5321	5521	5721	6301	7301	8301	T212D156J075(2)S
15.0	D	10	T110D156K075AS	7.0	4	2421	2661	2901	3141	6302	7302	8302	T212D156K075(2)S
15.0	D	20	T110D156M075AS	7.0	4	2422	2662	2902	3142	6303	7303	8303	T212D156M075(2)S
100 VOLT RATING AT 85°C — 67 VOLT RATING AT 125°													
0.0047	A	5	T110A472J100AS	0.3	2	5122	5322	5522	5722	6304	7304	*	T212A472J100(2)S
0.0047	A	10	T110A472K100AS	0.3	2	2423	2663	2903	3143	6305	7305	*	T212A472K100(2)S
0.0047	A	20	T110A472M100AS	0.3	2	2424	2664	2904	3144	6306	7306	*	T212A472M100(2)S
0.0056	A	5	T110A562J100AS	0.3	2	5123	5323	5523	5723	6307	7307	*	T212A562J100(2)S
0.0056	A	10	T110A562K100AS	0.3	2	2425	2665	2905	3145	6308	7308	*	T212A562K100(2)S
0.0056	A	20	T110A562M100AS	0.3	2								
0.0068	A	5	T110A682J100AS	0.3	2	5124	5324	5524	5724	6309	7309	*	T212A682J100(2)S
0.0068	A	10	T110A682K100AS	0.3	2	2426	2666	2906	3146	6310	7310	*	T212A682K100(2)S
0.0068	A	20	T110A682M100AS	0.3	2	2427	2667	2907	3147	6311	7311	*	T212A682M100(2)S
0.0082	A	5	T110A822J100AS	0.3	2	5125	5325	5525	5725	6312	7312	*	T212A822J100(2)S
0.0082	A	10	T110A822K100AS	0.3	2	2428	2668	2908	3148	6313	7313	*	T212A822K100(2)S
0.0082	A	20	T110A822M100AS	0.3	2								
0.01	A	5	T110A103J100AS	0.3	2	5126	5326	5526	5726	6314	7314	*	T212A103J100(2)S
0.01	A	10	T110A103K100AS	0.3	2	2429	2669	2909	3149	6315	7315	*	T212A103K100(2)S
0.01	A	20	T110A103M100AS	0.3	2	2430	2670	2910	3150	6316	7316	*	T212A103M100(2)S
0.012	A	5	T110A123J100AS	0.3	2	5127	5327	5527	5727	6317	7317	*	T212A123J100(2)S
0.012	A	10	T110A123K100AS	0.3	2	2431	2671	2911	3151	6318	7318	*	T212A123K100(2)S
0.012	A	20	T110A123M100AS	0.3	2								
0.015	A	5	T110A153J100AS	0.3	2	5128	5328	5528	5728	6319	7319	*	T212A153J100(2)S
0.015	A	10	T110A153K100AS	0.3	2	2432	2672	2912	3152	6320	7320	*	T212A153K100(2)S
0.015	A	20	T110A153M100AS	0.3	2	2433	2673	2913	3153	6321	7321	*	T212A153M100(2)S
0.018	A	5	T110A183J100AS	0.3	2	5129	5329	5529	5729	6322	7322	*	T212A183J100(2)S
0.018	A	10	T110A183K100AS	0.3	2	2434	2674	2914	3154	6323	7323	*	T212A183K100(2)S
0.018	A	20	T110A183M100AS	0.3	2								
0.022	A	5	T110A223J100AS	0.3	2	5130	5330	5530	5730	6324	7324	*	T212A223J100(2)S
0.022	A	10	T110A223K100AS	0.3	2	2435	2675	2915	3155	6325	7325	*	T212A223K100(2)S

(1) To complete T110 Series part number, insert Capacitance Tolerance Symbol in the 9th Character as shown on Page 6.
(2) To complete the T212 Series Part Number, insert Failure Rate Symbol in the 13th Character.
Bold Face lines indicate popular part types and values.
*Note: D Failure Rate — Not QPL for -8304 thru -8401.

RATINGS & PART NUMBER REFERENCE

CAPACITANCE µF	CASE SIZE	CAPACITANCE TOLERANCE ±%	KEMET T110 KEMET PART NUMBER	D.C. LEAKAGE µA@25°C MAX.	MAX. DISSIPATION FACTOR %@25°C, 120Hz	MIL-PRF-39003 (CSR13) CAPACITORS — DASH NUMBER REFERENCE FAILURE RATE LEVEL (%/1000 HRS.) — MIL-PRF-39003/1H EXPONENTIAL M (1.0)	P (0.1)	R (0.01)	S (0.001)	MIL-PRF-39003/1H GRADED B (0.1)	C (0.01)	D (0.001)	KEMET EQUIVALENT MILITARY PART NUMBER
100 VOLT RATING AT 85°C — 67 VOLT RATING AT 125°C (Cont'd)													
0.022	A	20	T110A223M100AS	0.3	2	2436	2676	2916	3156	6326	7326	*	T212A223M100(2)S
0.027	A	5	T110A273J100AS	0.3	2	5131	5331	5531	5731	6327	7327	*	T212A273J100(2)S
0.027	A	10	T110A273K100AS	0.3	2	2437	2677	2917	3157	6328	7328	*	T212A273K100(2)S
0.027	A	20	T110A273M100AS	0.3	2								
0.033	A	5	T110A333J100AS	0.3	2	5132	5332	5532	5732	6329	7329	*	T212A333J100(2)S
0.033	A	10	T110A333K100AS	0.3	2	2438	2678	2918	3158	6330	7330	*	T212A333K100(2)S
0.033	A	20	T110A333M100AS	0.3	2	2439	2679	2919	3159	6331	7331	*	T212A333M100(2)S
0.039	A	5	T110A393J100AS	0.3	2	5133	5333	5533	5733	6332	7332	*	T212A393J100(2)S
0.039	A	10	T110A393K100AS	0.3	2	2440	2680	2920	3160	6333	7333	*	T212A393K100(2)S
0.039	A	20	T110A393M100AS	0.3	2								
0.047	A	5	T110A473J100AS	0.3	2	5134	5334	5534	5734	6334	7334	*	T212A473J100(2)S
0.047	A	10	T110A473K100AS	0.3	2	2441	2681	2921	3161	6335	7335	*	T212A473K100(2)S
0.047	A	20	T110A473M100AS	0.3	2	2442	2682	2922	3162	6336	7336	*	T212A473M100(2)S
0.056	A	5	T110A563J100AS	0.3	2	5135	5335	5535	5735	6337	7337	*	T212A563J100(2)S
0.056	A	10	T110A563K100AS	0.3	2	2443	2683	2923	3163	6338	7338	*	T212A563K100(2)S
0.056	A	20	T110A563M100AS	0.3	2								
0.068	A	5	T110A683J100AS	0.3	2	5136	5336	5536	5736	6339	7339	*	T212A683J100(2)S
0.068	A	10	T110A683K100AS	0.3	2	2444	2684	2924	3164	6340	7340	*	T212A683K100(2)S
0.068	A	20	T110A683M100AS	0.3	2	2445	2685	2925	3165	6341	7341	*	T212A683M100(2)S
0.082	A	5	T110A823J100AS	0.3	2	5137	5337	5537	5737	6342	7342	*	T212A823J100(2)S
0.082	A	10	T110A823K100AS	0.3	2	2446	2686	2926	3166	6343	7343	*	T212A823K100(2)S
0.082	A	20	T110A823M100AS	0.3	2								
0.1	A	5	T110A104J100AS	0.3	2	5138	5338	5538	5738	6344	7344	*	T212A104J100(2)S
0.1	A	10	T110A104K100AS	0.3	2	2447	2687	2927	3167	6345	7345	*	T212A104K100(2)S
0.1	A	20	T110A104M100AS	0.3	2	2448	2688	2928	3168	6346	7346	*	T212A104M100(2)S
0.12	A	5	T110A124J100AS	0.3	2	5139	5339	5539	5739	6347	7347	*	T212A124J100(2)S
0.12	A	10	T110A124K100AS	0.3	2	2449	2689	2929	3169	6348	7348	*	T212A124K100(2)S
0.12	A	20	T110A124M100AS	0.3	2								
0.15	A	5	T110A154J100AS	0.3	2	5140	5340	5540	5740	6349	7349	*	T212A154J100(2)S
0.15	A	10	T110A154K100AS	0.3	2	2450	2690	2930	3170	6350	7350	*	T212A154K100(2)S
0.15	A	20	T110A154M100AS	0.3	2	2451	2691	2931	3171	6351	7351	*	T212A154M100(2)S
0.18	A	5	T110A184J100AS	0.3	2	5141	5341	5541	5741	6352	7352	*	T212A184J100(2)S
0.18	A	10	T110A184K100AS	0.3	2	2452	2692	2932	3172	6353	7353	*	T212A184K100(2)S
0.18	A	20	T110A184M100AS	0.3	2								
0.22	A	5	T110A224J100AS	0.3	2	5142	5342	5542	5742	6354	7354	*	T212A224J100(2)S
0.22	A	10	T110A224K100AS	0.3	2	2453	2693	2933	3173	6355	7355	*	T212A224K100(2)S
0.22	A	20	T110A224M100AS	0.3	2	2454	2694	2934	3174	6356	7356	*	T212A224M100(2)S
0.27	A	5	T110A274J100AS	0.3	2	5143	5343	5543	5743	6357	7357	*	T212A274J100(2)S
0.27	A	10	T110A274K100AS	0.3	2	2455	2695	2935	3175	6358	7358	*	T212A274K100(2)S
0.27	A	20	T110A274M100AS	0.3	2								
0.33	A	5	T110A334J100AS	0.3	2	5144	5344	5544	5744	6359	7359	*	T212A334J100(2)S
0.33	A	10	T110A334K100AS	0.3	2	2456	2696	2936	3176	6360	7360	*	T212A334K100(2)S
0.33	A	20	T110A334M100AS	0.3	2	2457	2697	2937	3177	6361	7361	*	T212A334M100(2)S
0.39	A	5	T110A394J100AS	0.3	2	5145	5345	5545	5745	6362	7362	*	T212A394J100(2)S
0.39	A	10	T110A394K100AS	0.3	2	2458	2698	2938	3178	6363	7363	*	T212A394K100(2)S
0.39	A	20	T110A394M100AS	0.3	2								
0.47	A	5	T110A474J100AS	0.3	2	5146	5346	5546	5746	6364	7364	*	T212A474J100(2)S
0.47	A	10	T110A474K100AS	0.3	2	2459	2699	2939	3179	6365	7365	*	T212A474K100(2)S
0.47	A	20	T110A474M100AS	0.3	2	2460	2700	2940	3180	6366	7366	*	T212A474M100(2)S
0.56	A	5	T110A564J100AS	0.3	2	5147	5347	5547	5747	6367	7367	*	T212A564J100(2)S
0.56	A	10	T110A564K100AS	0.3	2	2461	2701	2941	3181	6368	7368	*	T212A564K100(2)S
0.56	A	20	T110A564M100AS	0.3	2								
0.68	B	5	T110B684J100AS	0.3	2	5148	5348	5548	5748	6369	7369	*	T212B684J100(2)S
0.68	B	10	T110B684K100AS	0.3	2	2462	2702	2942	3182	6370	7370	*	T212B684K100(2)S
0.68	B	20	T110B684M100AS	0.3	2	2463	2703	2943	3183	6371	7371	*	T212B684M100(2)S
0.82	B	5	T110B824J100AS	0.4	2	5149	5349	5549	5749	6372	7372	*	T212B824J100(2)S
0.82	B	10	T110B824K100AS	0.4	2	2464	2704	2944	3184	6373	7373	*	T212B824K100(2)S
0.82	B	20	T110B824M100AS	0.4	2								
1.0	B	5	T110B105J100AS	0.5	2	5150	5350	5550	5750	6374	7374	*	T212B105J100(2)S
1.0	B	10	T110B105K100AS	0.5	2	2465	2705	2945	3185	6375	7375	*	T212B105K100(2)S
1.0	B	20	T110B105M100AS	0.5	2	2466	2706	2946	3186	6376	7376	*	T212B105M100(2)S

(1) To complete T110 Series Part Number, insert Capacitance Tolerance Symbol in the 9th Character as shown on Page 6.
(2) To complete the T212 Series Part Number, insert Failure Rate Symbol in the 13th Character.
Bold Face lines indicate popular part types and values.
*Note: D Failure Rate — Not QPL for -8304 thru -8401.

RATINGS & PART NUMBER REFERENCE

CAPACITANCE µF	CASE SIZE	CAPACITANCE TOLERANCE ±%	KEMET T110 PART NUMBER	D.C. LEAKAGE µA@25°C MAX.	MAX. DISSIPATION FACTOR %@25°C, 120Hz	MIL-PRF-39003 (CSR13) CAPACITORS — DASH NUMBER REFERENCE FAILURE RATE LEVEL (%/1000 HRS.) — MIL-PRF-39003/1H EXPONENTIAL: M (1.0)	P (0.1)	R (0.01)	S (0.001)	MIL-PRF-39003/1H GRADED: B (0.1)	C (0.01)	D (0.001)	KEMET EQUIVALENT MILITARY PART NUMBER
100 VOLT RATING AT 85°C — 67 VOLT RATING AT 125°C (Cont'd)													
1.2	B	5	T110B125J100AS	0.5	3	5151	5351	5551	5751	6377	7377	*	T212B125J100(2)S
1.2	B	10	T110B125K100AS	0.5	3	2467	2707	2947	3187	6378	7378	*	T212B125K100(2)S
1.2	B	20	T110B125M100AS	0.5	3								
1.5	B	5	T110B155J100AS	0.7	3	5152	5352	5552	5752	6379	7379	*	T212B155J100(2)S
1.5	B	10	T110B155K100AS	0.7	3	2468	2708	2948	3188	6380	7380	*	T212B155K100(2)S
1.5	B	20	T110B155M100AS	0.7	3	2469	2709	2949	3189	6381	7381	*	T212B155M100(2)S
1.8	B	5	T110B185J100AS	0.7	3	5153	5353	5553	5753	6382	7382	*	T212B185J100(2)S
1.8	B	10	T110B185K100AS	0.7	3	2470	2710	2950	3190	6383	7383	*	T212B185K100(2)S
1.8	B	20	T110B185M100AS	0.7	3								
2.2	B	5	T110B225J100AS	0.9	3	5154	5354	5554	5754	6384	7384	*	T212B225J100(2)S
2.2	B	10	T110B225K100AS	0.9	3	2471	2711	2951	3191	6385	7385	*	T212B225K100(2)S
2.2	B	20	T110B225M100AS	0.9	3	2472	2712	2952	3192	6386	7386	*	T212B225M100(2)S
2.7	B	5	T110B275J100AS	1.1	3	5155	5355	5555	5755	6387	7387	*	T212B275J100(2)S
2.7	B	10	T110B275K100AS	1.1	3	2473	2713	2953	3193	6388	7388	*	T212B275K100(2)S
2.7	B	20	T110B275M100AS	1.1	3								
3.3	C	5	T110C335J100AS	1.5	3	5156	5356	5556	5756	6389	*	*	T212C335J100(2)S
3.3	C	10	T110C335K100AS	1.5	3	5157	5357	5557	5757	6390	*	*	T212C335K100(2)S
3.3	C	20	T110C335M100AS	1.5	3	5158	5358	5558	5758	6391	*	*	T212C335M100(2)S
3.9	C	5	T110C395J100AS	1.5	3	5159	5359	5559	5759	6392	*	*	T212C395J100(2)S
3.9	C	10	T110C395K100AS	1.5	3	5160	5360	5560	5760	6393	*	*	T212C395K100(2)S
4.7	C	5	T110C475J100AS	2.5	3	5161	5361	5561	5761	6394	*	*	T212C475J100(2)S
4.7	C	10	T110C475K100AS	2.5	3	5162	5362	5562	5762	6395	*	*	T212C475K100(2)S
4.7	C	20	T110C475M100AS	2.5	3	5163	5363	5563	5763	6396	*	*	T212C475M100(2)S
5.6	C	5	T110C565J100AS	2.5	3	5164	5364	5564	5764	6397	*	*	T212C565J100(2)S
5.6	C	10	T110C565K100AS	2.5	3	5165	5365	5565	5765	6398	*	*	T212C565K100(2)S
6.8	C	5	T110C685J100AS	2.5	3	5166	5366	5566	5766	6399	*	*	T212C685J100(2)S
6.8	C	10	T110C685K100AS	2.5	3	5167	5367	5567	5767	6400	*	*	T212C685K100(2)S
6.8	C	20	T110C685M100AS	2.5	3	5168	5368	5568	5768	6401	*	*	T212C685M100(2)S
8.2	D	5,10,20	T110D825(1)100AS	5.0	3								
10.0	D	5,10,20	T110D106(1)100AS	5.0	3								
125 VOLT RATING AT 85°C — 82 VOLT RATING AT 125°													
0.0047	A	5,10,20	T110A472(1)125AS	0.5	3								
0.0056	A	5,10,20	T110A562(1)125AS	0.5	3								
0.0068	A	5,10,20	T110A682(1)125AS	0.5	3								
0.0082	A	5,10,20	T110A822(1)125AS	0.5	3								
0.01	A	5,10,20	T110A103(1)125AS	0.5	3								
0.012	A	5,10,20	T110A123(1)125AS	0.5	3								
0.015	A	5,10,20	T110A153(1)125AS	0.5	3								
0.018	A	5,10,20	T110A183(1)125AS	0.5	3								
0.022	A	5,10,20	T110A223(1)125AS	0.5	3								
0.027	A	5,10,20	T110A273(1)125AS	0.5	3								
0.033	A	5,10,20	T110A333(1)125AS	0.5	3								
0.039	A	5,10,20	T110A393(1)125AS	1.5	3								
0.047	A	5,10,20	T110A473(1)125AS	1.5	3								
0.056	A	5,10,20	T110A563(1)125AS	1.5	3								
0.068	A	5,10,20	T110A683(1)125AS	1.5	3								
0.082	A	5,10,20	T110A823(1)125AS	1.5	3								
0.1	A	5,10,20	T110A104(1)125AS	1.5	3								
0.12	A	5,10,20	T110A124(1)125AS	1.5	3								
0.15	A	5,10,20	T110A154(1)125AS	1.5	3								
0.18	A	5,10,20	T110A184(1)125AS	1.5	3								
0.22	A	5,10,20	T110A224(1)125AS	1.5	3								
0.27	A	5,10,20	T110A274(1)125AS	1.5	3								
0.33	A	5,10,20	T110A334(1)125AS	1.5	3								
0.39	B	5,10,20	T110B394(1)125AS	1.5	3								
0.47	B	5,10,20	T110B474(1)125AS	1.5	3								
0.56	B	5,10,20	T110B564(1)125AS	1.5	3								
0.68	B	5,10,20	T110B684(1)125AS	1.5	3								
0.82	B	5,10,20	T110B824(1)125AS	1.5	3								

(1) To complete T110 Series Part Number, insert Capacitance Tolerance Symbol in the 9th Character as shown on Page 6.
(2) To complete the T212 Series Part Number, insert Failure Rate Symbol in the 13th Character.
Bold Face lines indicate popular part types and values.
*Note: C failure rate — Not QPL for 7389 thru 7401.
D failure rate — Not QPL for -8304 thru -8401.

RATINGS & PART NUMBER REFERENCE

CAPACITANCE µF	CASE SIZE	CAPACITANCE TOLERANCE ±%	KEMET T110 KEMET PART NUMBER	D.C. LEAKAGE µA@25°C MAX.	MAX. DISSIPATION FACTOR %@25°C, 120Hz	MIL-PRF-39003 (CSR13) CAPACITORS — DASH NUMBER REFERENCE FAILURE RATE LEVEL (%/1000 HRS.) — MIL-PRF-39003/1H EXPONENTIAL: M (1.0)	P (0.1)	R (0.01)	S (0.001)	MIL-PRF-39003/1H GRADED: B (0.1)	C (0.01)	D (0.001)	KEMET EQUIVALENT MILITARY PART NUMBER
125 VOLT RATING AT 85°C — 82 VOLT RATING AT 125°C													
1.0	B	5,10,20	T110B105(1)125AS	1.5	3								
1.2	B	5,10,20	T110B125(1)125AS	1.5	3								
1.5	B	5,10,20	T110B155(1)125AS	1.5	3								
1.8	B	5,10,20	T110B185(1)125AS	1.5	3								
2.2	B	5,10,20	T110B225(1)125AS	1.5	3								
2.7	C	5,10,20	T110C275(1)125AS	2.0	3								
3.3	C	5,10,20	T110C335(1)125AS	2.0	3								
3.9	C	5,10,20	T110C395(1)125AS	2.0	3								
4.7	C	5,10,20	T110C475(1)125AS	3.0	3								
5.6	C	5,10,20	T110C565(1)125AS	3.0	3								
6.8	C	5,10,20	T110C685(1)125AS	3.0	3								
8.2	D	5,10,20	T110D825(1)125AS	6.0	3								
10.0	D	5,10,20	T110D106(1)125AS	6.0	3								

(1) To complete T110 Series Part Number, insert Capacitance Tolerance Symbol in the 9th Character as shown on Page 6.
(2) To complete the T212 Series Part Number, insert Failure Rate Symbol in the 13th Character.
Bold Face lines indicate popular part types and values.

T110/T140 Herm Seal ESR (OHMS) at 100 kHz @ +25°C

(The ESR values provided below are for reference only. No warranty, as stated on page 3 and reincorporated here, is made as to the accuracy of these values for any particular T110/T140 Series product.)

Cap µF	6 Volt	10 Volt	15 Volt	20 Volt	30 Volt	35 Volt	50 Volt	60 Volt	75 Volt	100 Volt	125 Volt
0.10				37.0		26.0	26.0	26.0	26.0	25.0	25.0
0.12				37.0		26.0	26.0	26.0	26.0	25.0	25.0
0.15				32.0		21.0	21.0	21.0	21.0	20.0	20.0
0.18				32.0		21.0	21.0	21.0	21.0	20.0	20.0
0.22				27.0		17.0	17.0	17.0	17.0	16.0	16.0
0.27				25.0		17.0	17.0	17.0	17.0	16.0	16.0
0.33			28.0	22.0		15.0	15.0	15.0	15.0	14.0	14.0
0.39			28.0	22.0		15.0	15.0	15.0	15.0	14.0	14.0
0.47			26.0	20.0		13.0	13.0	13.0	13.0	12.0	12.0
0.56			26.0	18.0		13.0	13.0	13.0	13.0	12.0	12.0
0.68			24.0	16.0		10.0	10.0	10.0	10.0	9.0	9.0
0.82			24.0	16.0		10.0	10.0	10.0	10.0	9.0	9.0
1.0		20.0	17.0	10.0		8.0	8.0	8.0	8.0	7.0	7.0
1.2		20.0	17.0	10.0	9.0	8.0	8.0	8.0	8.0	7.0	7.0
1.5		14.0	10.0	9.0	8.0	6.0	5.0	5.0	5.0	4.0	4.0
1.8		14.0	10.0	9.0	8.0	6.0	5.0	5.0	5.0	4.0	4.0
2.2	14.0	13.0	8.0	7.0	6.0	5.0	3.5	3.5	3.5	3.0	3.0
2.7	14.0	13.0	8.0	7.0	6.0	5.0	3.5	3.5	3.5	3.0	3.0
3.3	13.0	10.0	6.0	5.5		4.0	3.0	3.0	3.0	2.5	2.5
3.9	13.0	10.0	6.0	5.5		4.0	3.0	3.0	3.0	2.5	2.5
4.7	10.0	8.0	5.0	4.5		3.0	2.5	2.5	2.5	2.0	2.0
5.6	10.0	8.0	5.0	4.5		3.0	2.5	2.5	2.5	2.0	2.0
6.8	8.0	6.0	4.0	3.6		2.5	2.0	2.0	2.0	1.5	1.5
8.2	8.0	6.0	4.0	3.6		2.5	2.0	2.0	2.0	1.5	1.5
10.0	6.0	5.0	3.2	2.9		2.0	1.6	1.6	1.6	1.0	1.0
12.0	6.0	5.0	3.2	2.9	2.5	2.0	1.6	1.6	1.6		
15.0	5.0	3.7	2.5	2.3	2.0	1.6	1.2	1.2	1.2		
18.0	5.0	3.7	2.5	2.3	2.0	1.6	1.2	1.2			
22.0	3.7	2.7	2.0	1.8		1.3	1.0	1.0			
27.0	3.7	2.7	2.0	1.8		1.3	1.0	1.0			
33.0	3.0	2.1	1.6	1.4	1.2	1.0	0.8	0.8			
39.0	3.0	2.1	1.6	1.4	1.2	1.0	0.8				
47.0	2.0	1.7	1.3	1.2	1.0	0.8	0.6				
56.0	2.0	1.7	1.3	1.2	1.0	0.8					
68.0	1.8	1.3	1.0	0.9	0.8	0.6					
82.0	1.8	1.3	1.0	0.9	0.8	0.6					
100.0	1.6	1.0	0.8	0.6	0.5	0.5					
120.0	1.6	1.0	0.8	0.6							
150.0	0.9	0.8	0.6	0.5							
180.0	0.9	0.8	0.6	0.5							
220.0	0.9	0.6	0.5								
270.0	0.9	0.6	0.5								
330.0	0.7	0.5	0.4								
390.0	0.7	0.5									
470.0	0.5	0.5									
560.0	0.5	0.5									
680.0	0.3										
820.0	0.3										
1000.0	0.12										
1200.0	0.12										

T110 Herm Seal LOW ESR (OHMS) at 100 kHz @ +25° C

The ESR values provided below may be ordered using KEMET Customer Specification 2864.

Cap µF	6 Volt	10 Volt	15 Volt	20 Volt	35 Volt	50 Volt
5.6						0.300
6.8						0.275
8.2					0.250	0.250
10.0					0.230	0.230
12.0					0.210	0.210
15.0					0.190	0.190
18.0					0.175	0.175
22.0					0.160	0.160
27.0				0.145	0.145	
33.0				0.130	0.130	
39.0				0.120	0.120	
47.0				0.110	0.110	
56.0			0.100	0.100		
68.0			0.095	0.095		
82.0		0.085	0.085	0.085		
100.0		0.075	0.075	0.075		
120.0		0.070	0.070			
150.0	0.065	0.065				
180.0	0.060	0.060				
220.0	0.055	0.055				
270.0	0.050					
330.0	0.045					

TANTALUM HERMETICALLY SEALED / AXIAL — MIL-PRF-39003

T111 SERIES — NON-POLAR & T213 (CSR91)

Primarily designed for use in tuned low frequency circuits, phasing low voltage AC motors, servo systems and other applications where reversal of polarity is a primary consideration. The T111 unit consists of two polar T110 Series hermetically sealed tantalum capacitors, electrically and mechanically connected back-to-back and supported by an outer corrosion-resistant metal sleeve. They exhibit comparable electrical and performance characteristics of T110 Series. Available in capacitance values ranging from .0023 to 160 µF in ±20%, ±10%, and ±5% tolerances in working voltages from 6 to 100 VDC at +85°C. Also, the following table includes M39003/4 QPL Product.

DIMENSIONS — INCHES & (MILLIMETERS)

CASE SIZE	B ±0.002 (±.05)	UNINSULATED D ±0.010 (±.25)	UNINSULATED L ±0.031 (±.79)	INSULATED D ±0.010 (+.25) -0.015 (-.38)	INSULATED L ±0.031 (±.79)	C MAX.
A	0.020 (.51)	0.147 (3.73)	0.565 (14.35)	0.161 (4.09)	0.575 (14.61)	0.750 (19.05)
B	0.020 (.51)	0.194 (4.93)	0.916 (23.27)	0.207 (5.26)	0.955 (24.26)	1.130 (28.70)
C	0.025 (.64)	0.300 (7.62)	1.340 (34.04)	0.314 (7.98)	1.350 (34.29)	1.525 (38.74)
D	0.025 (.64)	0.362 (9.19)	1.540 (39.12)	0.376 (9.55)	1.550 (39.37)	1.725 (43.82)

MARKING INFORMATION*

A, B, C & D CASES

K 10%	Manufacturer's Classification and Tolerance
6R0 µF	Normal Capacitance — (µF) ("R" indicates decimal)
20V	Voltage
0325AB	Date Code and Batch Code

CAPACITOR OUTLINE DRAWINGS

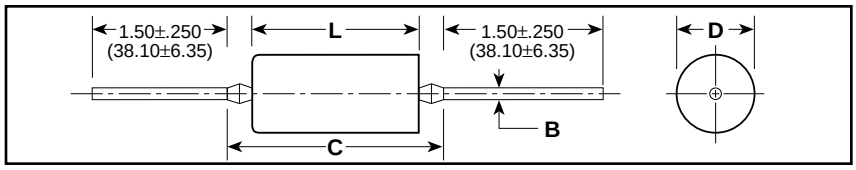

*** For Military Marking, see page 4.**

RATINGS & PART NUMBER REFERENCE

CAPACITANCE µF	CASE SIZE	CAPACITANCE TOLERANCE ±%	KEMET T111 SERIES: KEMET PART NUMBER	D.C. LEAKAGE µA@25°C MAX.	MAX. DISSIPATION FACTOR %@25°C, 120Hz	MIL-PRF-39003 (CSR91) CAPACITORS — DASH NUMBER REFERENCE FAILURE RATE LEVEL (%/1000 HRS.) — MIL-PRF-39003/4C EXPONENTIAL: M (1.0)	P (0.1)	R (0.01)	S (0.001)	MIL-PRF-39003/4C GRADED: B (0.1)	C (0.01)	D (0.001)	KEMET EQUIVALENT MILITARY PART NUMBER
6 VOLT RATING AT 85°C — 4 VOLT RATING AT 125°C													
2.8	A	10	T111A285K006AS	0.3	4	0221	0441	0661	0881	3001	4001	5001	T213A285K006(1)S
3.4	A	10	T111A345K006AS	0.3	6	0222	0442	0662	0882	3002	4002	5002	T213A345K006(1)S
3.4	A	20	T111A345M006AS	0.3	6	0223	0443	0663	0883	3003	4003	5003	T213A345M006(1)S
23.0	B	10	T111B236K006AS	1.5	6	0224	0444	0664	0884	3004	4004	5004	T213B236K006(1)S
23.0	B	20	T111B236M006AS	1.5	6	0225	0445	0665	0885	3005	4005	5005	T213B236M006(1)S
28.0	B	10	T111B286K006AS	1.5	6	0226	0446	0666	0886	3006	4006	5006	T213B286K006(1)S
75.0	C	10	T111C756K006AS	4.5	6	0227	0447	0667	0887	3007	4007	5007	T213C756K006(1)S
75.0	C	20	T111C756M006AS	4.5	6	0228	0448	0668	0888	3008	4008	5008	T213C756M006(1)S
90.0	C	10	T111C906K006AS	4.5	6	0229	0449	0669	0889	3009	4009	5009	T213C906K006(1)S
90.0	C	20	T111C906M006AS	5.5	6	0230	0450	0670	0890				T213C906M006(1)S
130.0	D	10	T111D137K006AS	6.0	8	0231	0451	0671	0891	3010	4010	5010	T213D137K006(1)S
130.0	D	20	T111D137M006AS	6.0	8	0232	0452	0672	0892				T213D137M006(1)S
160.0	D	10	T111D167K006AS	7.5	8	0233	0453	0673	0893	3011	4011	5011	T213D167K006(1)S
160.0	D	20	T111D167M006AS	7.5	8	0234	0454	0674	0894	3012	4012	5012	T213D167M006(1)S
10 VOLT RATING AT 85°C — 7 VOLT RATING AT 125°C													
1.9	A	10	T111A195K010AS	0.3	4	0235	0455	0675	0895	3013	4013	5013	T213A195K010(1)S
2.3	A	10	T111A235K010AS	0.4	4	0236	0456	0676	0896	3014	4014	5014	T213A235K010(1)S
2.3	A	20	T111A235M010AS	0.4	4	0237	0457	0677	0897	3015	4015	5015	T213A235M010(1)S
13.0	B	10	T111B136K010AS	2.0	6	0238	0458	0678	0898	3016	4016	5016	T213B136K010(1)S
16.0	B	10	T111B166K010AS	2.0	6	0239	0459	0679	0899	3017	4017	5017	T213B166K010(1)S
16.0	B	20	T111B166M010AS	2.0	6	0240	0460	0680	0900	3018	4018	5018	T213B166M010(1)S
19.0	B	10	T111B196K010AS	2.0	6	0241	0461	0681	0901	3019	4019	5019	T213B196K010(1)S
41.0	C	10	T111C416K010AS	3.0	6	0242	0462	0682	0902	3020	4020	5020	T213C416K010(1)S
50.0	C	10	T111C506K010AS	5.0	6	0243	0463	0683	0903	3021	4021	5021	T213C506K010(1)S
50.0	C	20	T111C506M010AS	5.0	6	0244	0464	0684	0904	3022	4022	5022	T213C506M010(1)S
60.0	C	10	T111C606K010AS	6.0	6	0245	0465	0685	0905	3023	4023	5023	T213C606K010(1)S
60.0	C	20	T111C606M010AS	6.0	6	0246	0466	0686	0906				T213C606M010(1)S
90.0	D	10	T111D906K010AS	9.0	6	0247	0467	0687	0907	3024	4024	5024	T213D906K010(1)S
110.0	D	10	T111D117K010AS	10.0	8	0248	0468	0688	0908	3025	4025	5025	T213D117K010(1)S
110.0	D	20	T111D117M010AS	10.0	8	0249	0469	0689	0909	3026	4026	5026	T213D117M010(1)S

(1) To complete T213 Series Part Number, insert Failure Rate Symbol in the 13th Character as shown on Page 6.
*For ordering information see page 4 (military) and page 6.

KEMET Electronics Corporation, P.O. Box 5928, Greenville, S.C. 29606 (864) 963-6300

RATINGS & PART NUMBER REFERENCE

CAPACITANCE µF	CASE SIZE	CAPACITANCE TOLERANCE ±%	KEMET T111 SERIES: KEMET PART NUMBER	D.C. LEAKAGE µA@25°C MAX.	MAX. DISSIPATION FACTOR %@25°C, 120Hz	MIL-PRF-39003 (CSR91) CAPACITORS — DASH NUMBER REFERENCE FAILURE RATE LEVEL (%/1000 HRS.): MIL-PRF-39003/4C EXPONENTIAL: M (1.0)	P (0.1)	R (0.01)	S (0.001)	MIL-PRF-39003/4C GRADED: B (0.1)	C (0.01)	D (0.001)	KEMET EQUIVALENT MILITARY PART NUMBER
15 VOLT RATING AT 85°C — 10 VOLT RATING AT 125°C													
1.3	A	10	T111A135K015AS	0.3	4	0250	0470	0690	0910	3027	4027	5027	T213A135K015(1)S
1.6	A	10	T111A165K015AS	0.4	4	0251	0471	0691	0911	3028	4028	5028	T213A165K015(1)S
1.6	A	20	T111A165M015AS	0.4	4	0252	0472	0692	0912	3029	4029	5029	T213A165M015(1)S
9.0	B	10	T111B905K015AS	2.0	6	0253	0473	0693	0913	3030	4030	5030	T213B905K015(1)S
11.0	B	10	T111B116K015AS	2.0	6	0254	0474	0694	0914	3031	4031	5031	T213B116K015(1)S
11.0	B	20	T111B116M015AS	2.0	6	0255	0475	0695	0915	3032	4032	5032	T213B116M015(1)S
28.0	C	10	T111C286K015AS	4.0	6	0256	0476	0696	0916	3033	4033	5033	T213C286K015(1)S
34.0	C	10	T111C346K015AS	5.0	6	0257	0477	0697	0917	3034	4034	5034	T213C346K015(1)S
34.0	C	20	T111C346M015AS	5.0	6	0258	0478	0698	0918	3035	4035	5035	T213C346M015(1)S
60.0	D	10	T111D606K015AS	6.0	6	0259	0479	0699	0919	3036	4036	5036	T213D606K015(1)S
75.0	D	10	T111D756K015AS	10.0	6	0260	0480	0700	0920	3037	4037	5037	T213D756K015(1)S
75.0	D	20	T111D756M015AS	10.0	6	0261	0481	0701	0921	3038	4038	5038	T213D756M015(1)S
20 VOLT RATING AT 85°C — 13 VOLT RATING AT 125°C													
0.6	A	10	T111A604K020AS	0.3	4	0262	0482	0702	0922	3039	4039	5039	T213A604K020(1)S
0.75	A	10	T111A754K020AS	0.3	4	0263	0483	0703	0923	3040	4040	5040	T213A754K020(1)S
0.75	A	20	T111A754M020AS	0.3	4	0264	0484	0704	0924	3041	4041	5041	T213A754M020(1)S
0.9	A	10	T111A904K020AS	0.3	4	0265	0485	0705	0925	3042	4042	5042	T213A904K020(1)S
1.1	A	10	T111A115K020AS	0.4	4	0266	0486	0706	0926	3043	4043	5043	T213A115K020(1)S
1.1	A	20	T111A115M020AS	0.4	4	0267	0487	0707	0927	3044	4044	5044	T213A115M020(1)S
4.1	B	10	T111B415K020AS	1.0	6	0268	0488	0708	0928	3045	4045	5045	T213B415K020(1)S
5.0	B	10	T111B505K020AS	1.0	6	0269	0489	0709	0929	3046	4046	5046	T213B505K020(1)S
5.0	B	20	T111B505M020AS	1.0	6	0270	0490	0710	0930	3047	4047	5047	T213B505M020(1)S
6.0	B	10	T111B605K020AS	1.0	6	0271	0491	0711	0931	3048	4048	5048	T213B605K020(1)S
7.5	B	10	T111B755K020AS	2.0	6	0272	0492	0712	0932	3049	4049	5049	T213B755K020(1)S
7.5	B	20	T111B755M020AS	2.0	6	0273	0493	0713	0933	3050	4050	5050	T213B755M020(1)S
13.0	C	10	T111C136K020AS	2.5	6	0274	0494	0714	0934	3051	4051	5051	T213C136K020(1)S
16.0	C	10	T111C166K020AS	3.0	6	0275	0495	0715	0935	3052	4052	5052	T213C166K020(1)S
16.0	C	20	T111C166M020AS	3.0	6	0276	0496	0716	0936	3053	4053	5053	T213C166M020(1)S
19.0	C	10	T111C196K020AS	3.0	6	0277	0497	0717	0937	3054	4054	5054	T213C196K020(1)S
23.0	C	10	T111C236K020AS	4.5	6	0278	0498	0718	0938	3055	4055	5055	T213C236K020(1)S
23.0	C	20	T111C236M020AS	4.5	6	0279	0499	0719	0939	3056	4056	5056	T213C236M020(1)S
28.0	D	10	T111D286K020AS	5.5	6	0280	0500	0720	0940	3057	4057	5057	T213D286K020(1)S
34.0	D	10	T111D346K020AS	6.0	6	0281	0501	0721	0941	3058	4058	5058	T213D346K020(1)S
34.0	D	20	T111D346M020AS	6.0	6	0282	0502	0722	0942	3059	4059	5059	T213D346M020(1)S
41.0	D	10	T111D416K020AS	6.0	6	0283	0503	0723	0943	3060	4060	5060	T213D416K020(1)S
50.0	D	10	T111D506K020AS	10.0	6	0284	0504	0724	0944	3061	4061	5061	T213D506K020(1)S
50.0	D	20	T111D506M020AS	10.0	6	0285	0505	0725	0945	3062	4062	5062	T213D506M020(1)S
35 VOLT RATING AT 85°C — 23 VOLT RATING AT 125°C													
2.8	B	10	T111B285K035AS	1.0	4	0289	0509	0729	0949	3063	4063	5063	T213B285K035(1)S
3.4	B	10	T111B345K035AS	1.5	4	0290	0510	0730	0950	3064	4064	5064	T213B345K035(1)S
3.4	B	20	T111B345M035AS	1.5	4	0291	0511	0731	0951	3065	4065	5065	T213B345M035(1)S
11.0	C	10	T111C116K035AS	4.0	4	0292	0512	0732	0952	3066	4066	5066	T213C116K035(1)S
11.0	C	20	T111C116M035AS	4.0	4	0293	0513	0733	0953	3067	4067	5067	T213C116M035(1)S
13.0	D	10	T111D136K035AS	4.5	4	0294	0514	0734	0954	3068	4068	5068	T213D136K035(1)S
16.0	D	10	T111D166K035AS	5.5	4	0295	0515	0735	0955	3069	4069	5069	T213D166K035(1)S
16.0	D	20	T111D166M035AS	5.5	4	0296	0516	0736	0956	3070	4070	5070	T213D166M035(1)S
19.0	D	10	T111D196K035AS	6.0	4	0297	0517	0737	0957	3071	4071	5071	T213D196K035(1)S
23.0	D	10	T111D236K035AS	8.0	4	0298	0518	0738	0958	3072	4072	5072	T213D236K035(1)S
23.0	D	20	T111D236M035AS	8.0	4	0299	0519	0739	0959	3073	4073	5073	T213D236M035(1)S
50 VOLT RATING AT 85°C — 33 VOLT RATING AT 125°C													
0.0023	A	10	T111A232K050AS	0.1	2	1171	1241	1311	1381	3074	4074	5074	T213A232K050(1)S
0.0023	A	20	T111A232M050AS	0.1	2	1172	1242	1312	1382	3075	4075	5075	T213A232M050(1)S
0.0028	A	10	T111A282K050AS	0.1	2	1173	1243	1313	1383	3076	4076	5076	T213A282K050(1)S
0.0034	A	10	T111A342K050AS	0.1	2	1174	1244	1314	1384	3077	4077	5077	T213A342K050(1)S
0.0034	A	20	T111A342M050AS	0.1	2	1175	1245	1315	1385	3078	4078	5078	T213A342M050(1)S
0.0041	A	10	T111A412K050AS	0.1	2	1176	1246	1316	1386	3079	4079	5079	T213A412K050(1)S
0.005	A	10	T111A502K050AS	0.1	2	1177	1247	1317	1387	3080	4080	5080	T213A502K050(1)S
0.005	A	20	T111A502M050AS	0.1	2	1178	1248	1318	1388	3081	4081	5081	T213A502M050(1)S
0.006	A	10	T111A602K050AS	0.1	2	1179	1249	1319	1389	3082	4082	5082	T213A602K050(1)S
0.0075	A	10	T111A752K050AS	0.1	2	1180	1250	1320	1390	3083	4083	5083	T213A752K050(1)S
0.0075	A	20	T111A752M050AS	0.1	2	1181	1251	1321	1391	3084	4084	5084	T213A752M050(1)S
0.009	A	10	T111A902K050AS	0.1	2	1182	1252	1322	1392	3085	4085	5085	T213A902K050(1)S
0.011	A	10	T111A113K050AS	0.1	2	1183	1253	1323	1393	3086	4086	5086	T213A113K050(1)S
0.011	A	20	T111A113M050AS	0.1	2	1184	1254	1324	1394	3087	4087	5087	T213A113M050(1)S
0.013	A	10	T111A133K050AS	0.1	2	1185	1255	1325	1395	3088	4088	5088	T213A133K050(1)S
0.016	A	10	T111A163K050AS	0.1	2	1186	1256	1326	1396	3089	4089	5089	T213A163K050(1)S

(1) To complete T213 Series Part Number, insert Failure Rate Symbol in the 13th Character as shown on Page 6.

RATINGS & PART NUMBER REFERENCE

CAPACITANCE µF	CASE SIZE	CAPACITANCE TOLERANCE ±%	KEMET T111 SERIES: KEMET PART NUMBER	D.C. LEAKAGE µA@25°C MAX.	MAX. DISSIPATION FACTOR %@25°C, 120Hz	MIL-PRF-39003 (CSR91) CAPACITORS: DASH NUMBER REFERENCE FAILURE RATE LEVEL (%/1000 HRS.) MIL-PRF-39003/4C EXPONENTIAL: M (1.0)	P (0.1)	R (0.01)	S (0.001)	MIL-PRF-39003/4C GRADED: B (0.1)	C (0.01)	D (0.001)	KEMET EQUIVALENT MILITARY PART NUMBER
50 VOLT RATING AT 85°C — 33 VOLT RATING AT 125°C (Cont'd)													
0.016	A	20	T111A163M050AS	0.1	2	1187	1257	1327	1397	3090	4090	5090	T213A163M050(1)S
0.019	A	10	T111A193K050AS	0.1	2	1188	1258	1328	1398	3091	4091	5091	T213A193K050(1)S
0.023	A	10	T111A233K050AS	0.1	2	1189	1259	1329	1399	3092	4092	5092	T213A233K050(1)S
0.023	A	20	T111A233M050AS	0.1	2	1190	1260	1330	1400	3093	4093	5093	T213A233M050(1)S
0.028	A	10	T111A283K050AS	0.1	2	1191	1261	1331	1401	3094	4094	5094	T213A283K050(1)S
0.034	A	10	T111A343K050AS	0.1	2	1192	1262	1332	1402	3095	4095	5095	T213A343K050(1)S
0.034	A	20	T111A343M050AS	0.1	2	1193	1263	1333	1403	3096	4096	5096	T213A343M050(1)S
0.041	A	10	T111A413K050AS	0.1	2	1194	1264	1334	1404	3097	4097	5097	T213A413K050(1)S
0.05	A	10	T111A503K050AS	0.3	2	1195	1265	1335	1405	3098	4098	5098	T213A503K050(1)S
0.05	A	20	T111A503M050AS	0.3	2	1196	1266	1336	1406	3099	4099	5099	T213A503M050(1)S
0.06	A	10	T111A603K050AS	0.3	2	1197	1267	1337	1407	3100	4100	5100	T213A603K050(1)S
0.075	A	10	T111A753K050AS	0.3	2	1198	1268	1338	1408	3101	4101	5101	T213A753K050(1)S
0.075	A	20	T111A753M050AS	0.3	2	1199	1269	1339	1409	3102	4102	5102	T213A753M050(1)S
0.09	A	10	T111A903K050AS	0.3	2	1200	1270	1340	1410	3103	4103	5103	T213A903K050(1)S
0.11	A	10	T111A114K050AS	0.3	2	1201	1271	1341	1411	3104	4104	5104	T213A114K050(1)S
0.11	A	20	T111A114M050AS	0.3	2	1202	1272	1342	1412	3105	4105	5105	T213A114M050(1)S
0.13	A	10	T111A134K050AS	0.3	2	1203	1273	1343	1413	3106	4106	5106	T213A134K050(1)S
0.16	A	10	T111A164K050AS	0.3	2	1204	1274	1344	1414	3107	4107	5107	T213A164K050(1)S
0.16	A	20	T111A164M050AS	0.3	2	1205	1275	1345	1415	3108	4108	5108	T213A164M050(1)S
0.19	A	10	T111A194K050AS	0.3	2	1206	1276	1346	1416	3109	4109	5109	T213A194K050(1)S
0.23	A	10	T111A234K050AS	0.3	2	1207	1277	1347	1417	3110	4110	5110	T213A234K050(1)S
0.23	A	20	T111A234M050AS	0.3	2	1208	1278	1348	1418	3111	4111	5111	T213A234M050(1)S
0.28	A	10	T111A284K050AS	0.3	2	1209	1279	1349	1419	3112	4112	5112	T213A284K050(1)S
0.34	A	10	T111A344K050AS	0.3	2	1210	1280	1350	1420	3113	4113	5113	T213A344K050(1)S
0.34	A	20	T111A344M050AS	0.3	2	1211	1281	1351	1421	3114	4114	5114	T213A344M050(1)S
0.41	A	10	T111A414K050AS	0.3	2	0300	0520	0740	0960	3115	4115	5115	T213A414K050(1)S
0.5	A	10	T111A504K050AS	0.4	2	0301	0521	0741	0961	3116	4116	5116	T213A504K050(1)S
0.5	A	20	T111A504M050AS	0.4	2	0302	0522	0742	0962	3117	4117	5117	T213A504M050(1)S
0.6	B	10	T111B604K050AS	0.4	4	1212	1282	1352	1422	3118	4118	5118	T213B604K050(1)S
0.6	B	20	T111B604M050AS	0.4	4								
0.75	B	10	T111B754K050AS	0.5	4	2001	2101	2201	2301	3119	4119	5119	T213B754K050(1)S
0.75	B	20	T111B754M050AS	0.5	4	2002	2102	2202	2302	3120	4120	5120	T213B754M050(1)S
0.9	B	10	T111B904K050AS	0.5	4	1215	1285	1355	1425	3121	4121	5121	T213B904K050(1)S
0.9	B	20	T111B904M050AS	0.5	4								
1.1	B	10	T111B115K050AS	0.8	4	1216	1286	1356	1426	3122	4122	5122	T213B115K050(1)S
1.1	B	20	T111B115M050AS	0.8	4	1217	1287	1357	1427	3123	4123	5123	T213B115M050(1)S
1.3	B	10	T111B135K050AS	1.0	4	1218	1288	1358	1428	3124	4124	5124	T213B135K050(1)S
1.3	B	20	T111B135M050AS	1.0	4								
1.6	B	10	T111B165K050AS	1.2	4	1219	1289	1359	1429	3125	4125	5125	T213B165K050(1)S
1.6	B	20	T111B165M050AS	1.2	4	1220	1290	1360	1430	3126	4126	5126	T213B165M050(1)S
1.9	B	10	T111B195K050AS	1.5	4	1221	1291	1361	1431	3127	4127	5127	T213B195K050(1)S
1.9	B	20	T111B195M050AS	1.5	4								
2.3	B	10	T111B235K050AS	1.7	4	1222	1292	1362	1432	3128	4128	5128	T213B235K050(1)S
2.3	B	20	T111B235M050AS	1.7	4	1223	1293	1363	1433	3129	4129	5129	T213B235M050(1)S
2.8	C	10	T111C285K050AS	2.2	4	1224	1294	1364	1434	3130	4130	5130	T213C285K050(1)S
2.8	C	20	T111C285M050AS	2.2	4								
3.4	C	10	T111C345K050AS	2.2	4	1225	1295	1365	1435	3131	4131	5131	T213C345K050(1)S
3.4	C	20	T111C345M050AS	2.2	4	1226	1296	1366	1436	3132	4132	5132	T213C345M050(1)S
4.1	C	10	T111C415K050AS	2.5	4	1227	1297	1367	1437	3133	4133	5133	T213C415K050(1)S
4.1	C	20	T111C415M050AS	2.5	4								
5.0	C	10	T111C505K050AS	2.5	4	1228	1298	1368	1438	3134	4134	5134	T213C505K050(1)S
5.0	C	20	T111C505M050AS	2.5	4	1229	1299	1369	1439	3135	4135	5135	T213C505M050(1)S
6.0	C	10	T111C605K050AS	3.0	4	0303	0523	0743	0963	3136	4136	5136	T213C605K050(1)S
6.0	C	20	T111C605M050AS	3.0	4								
7.5	C	10	T111C755K050AS	4.1	4	0304	0524	0744	0964	3137	4137	5137	T213C755K050(1)S
7.5	C	20	T111C755M050AS	4.1	4	0305	0525	0745	0965	3138	4138	5138	T213C755M050(1)S
9.0	C	10	T111C905K050AS	4.5	4	0306	0526	0746	0966	3139	4139	5139	T213C905K050(1)S
9.0	C	20	T111C905M050AS	4.5	4								
11.0	D	10	T111D116K050AS	5.5	4	0307	0527	0747	0967	3140	4140	5140	T213D116K050(1)S
11.0	D	20	T111D116M050AS	5.5	4	0308	0528	0748	0968	3141	4141	5141	T213D116M050(1)S
75 VOLT RATING AT 85°C — 50 VOLT RATING AT 125°C													
0.34	A	10	T111A344K075AS	0.3	2	0309	0529	0749	0969	3142	4142	5142	T213A344K075(1)S
0.34	A	20	T111A344M075AS	0.3	2	0310	0530	0750	0970	3143	4143	5143	T213A344M075(1)S
0.41	B	10	T111B414K075AS	0.3	2	2008	2108	2208	2308	3144	4144	5144	T213B414K075(1)S
0.5	B	10	T111B504K075AS	0.4	2	2009	2109	2209	2309	3145	4145	5145	T213B504K075(1)S
0.5	B	20	T111B504M075AS	0.4	2	2010	2110	2210	2310	3146	4146	5146	T213B504M075(1)S
0.6	B	10	T111B604K075AS	0.4	4	2011	2111	2211	2311	3147	4147	5147	T213B604K075(1)S
0.75	B	10	T111B754K075AS	0.6	4	2012	2112	2212	2312	3148	4148	5148	T213B754K075(1)S
0.75	B	20	T111B754M075AS	0.6	4	2013	2113	2213	2313	3149	4149	5149	T213B754M075(1)S

(1) To complete T213 Series Part Number, insert Failure Rate Symbol in the 13th Character as shown on Page 6.

RATINGS & PART NUMBER REFERENCE

CAPACITANCE µF	CASE SIZE	CAPACITANCE TOLERANCE ±%	KEMET T111 SERIES: KEMET PART NUMBER	D.C. LEAKAGE µA@25°C MAX.	MAX. DISSIPATION FACTOR %@25°C, 120Hz	MIL-PRF-39003 (CSR91) CAPACITORS — DASH NUMBER REFERENCE FAILURE RATE LEVEL (%/1000 HRS.) — MIL-PRF-39003/4C EXPONENTIAL: M (1.0)	P (0.1)	R (0.01)	S (0.001)	MIL-PRF-39003/4C GRADED: B (0.1)	C (0.01)	D (0.001)	KEMET EQUIVALENT MILITARY PART NUMBER
75 VOLT RATING AT 85°C — 50 VOLT RATING AT 125°C (Cont'd)													
0.9	B	10	T111B904K075AS	0.7	4	2014	2114	2214	2314	3150	4150	5150	T213B904K075(1)S
1.1	B	10	T111B115K075AS	0.8	4	2015	2115	2215	2315	3151	4151	5151	T213B115K075(1)S
1.1	B	20	T111B115M075AS	0.8	4	2016	2116	2216	2316	3152	4152	5152	T213B115M075(1)S
1.3	B	10	T111B135K075AS	1.0	4	2017	2117	2217	2317	3153	4153	5153	T213B135K075(1)S
1.6	B	10	T111B165K075AS	1.2	4	0311	0531	0751	0971	3154	4154	5154	T213B165K075(1)S
1.6	B	20	T111B165M075AS	1.2	4	0312	0532	0752	0972	3155	4155	5155	T213B165M075(1)S
1.9	B	10	T111B195K075AS	1.5	4	0313	0533	0753	0973	3156	4156	5156	T213B195K075(1)S
2.3	C	10	T111C235K075AS	3.0	4	2003	2103	2203	2303	3157	4157	5157	T213C235K075(1)S
2.3	C	20	T111C235M075AS	3.0	4	2004	2104	2204	2304	3158	4158	5158	T213C235M075(1)S
2.8	C	10	T111C285K075AS	3.0	4	2005	2105	2205	2305	3159	4159	5159	T213C285K075(1)S
3.4	C	10	T111C345K075AS	5.0	4	2006	2106	2206	2306	3160	4160	5160	T213C345K075(1)S
3.4	C	20	T111C345M075AS	5.0	4	2007	2107	2207	2307	3161	4161	5161	T213C345M075(1)S
4.1	C	10	T111C415K075AS	5.0	4	0314	0534	0754	0974	3162	4162	5162	T213C415K075(1)S
5.0	C	10	T111C505K075AS	5.0	4	0315	0535	0755	0975	3163	4163	5163	T213C505K075(1)S
5.0	C	20	T111C505M075AS	5.0	4	0316	0536	0756	0976	3164	4164	5164	T213C505M075(1)S
6.0	D	10	T111D605K075AS	5.0	4	0317	0537	0757	0977	3165	4165	5165	T213D605K075(1)S
7.5	D	10	T111D755K075AS	7.0	4	0318	0538	0758	0978	3166	4166	5166	T213D755K075(1)S
7.5	D	20	T111D755M075AS	7.0	4	0319	0539	0759	0979	3167	4167	5167	T213D755M075(1)S
100 VOLT RATING AT 85°C — 67 VOLT RATING AT 125°C													
0.0023	A	10	T111A232K100AS	0.3	2	0320	0540	0760	0980	3168	4168	*	T213A232K100(1)S
0.0023	A	20	T111A232M100AS	0.3	2	0321	0541	0761	0981	3169	4169	*	T213A232M100(1)S
0.0028	A	10	T111A282K100AS	0.3	2	0322	0542	0762	0982	3170	4170	*	T213A282K100(1)S
0.0034	A	10	T111A342K100AS	0.3	2	0323	0543	0763	0983	3171	4171	*	T213A342K100(1)S
0.0034	A	20	T111A342M100AS	0.3	2	0324	0544	0764	0984	3172	4172	*	T213A342M100(1)S
0.0041	A	10	T111A412K100AS	0.3	2	0325	0545	0765	0985	3173	4173	*	T213A412K100(1)S
0.005	A	10	T111A502K100AS	0.3	2	0326	0546	0766	0986	3174	4174	*	T213A502K100(1)S
0.005	A	20	T111A502M100AS	0.3	2	0327	0547	0767	0987	3175	4175	*	T213A502M100(1)S
0.006	A	10	T111A602K100AS	0.3	2	0328	0548	0768	0988	3176	4176	*	T213A602K100(1)S
0.0075	A	10	T111A752K100AS	0.3	2	0329	0549	0769	0989	3177	4177	*	T213A752K100(1)S
0.0075	A	20	T111A752M100AS	0.3	2	0330	0550	0770	0990	3178	4178	*	T213A752M100(1)S
0.009	A	10	T111A902K100AS	0.3	2	0331	0551	0771	0991	3179	4179	*	T213A902K100(1)S
0.011	A	10	T111A113K100AS	0.3	2	0332	0552	0772	0992	3180	4180	*	T213A113K100(1)S
0.011	A	20	T111A113M100AS	0.3	2	0333	0553	0773	0993	3181	4181	*	T213A113M100(1)S
0.013	A	10	T111A133K100AS	0.3	2	0334	0554	0774	0994	3182	4182	*	T213A133K100(1)S
0.016	A	10	T111A163K100AS	0.3	2	0335	0555	0775	0995	3183	4183	*	T213A163K100(1)S
0.016	A	20	T111A163M100AS	0.3	2	0336	0556	0776	0996	3184	4184	*	T213A163M100(1)S
0.019	A	10	T111A193K100AS	0.3	2	0337	0557	0777	0997	3185	4185	*	T213A193K100(1)S
0.023	A	10	T111A233K100AS	0.3	2	0338	0558	0778	0998	3186	4186	*	T213A233K100(1)S
0.023	A	20	T111A233M100AS	0.3	2	0339	0559	0779	0999	3187	4187	*	T213A233M100(1)S
0.028	A	10	T111A283K100AS	0.3	2	0340	0560	0780	1000	3188	4188	*	T213A283K100(1)S
0.034	A	10	T111A343K100AS	0.3	2	0341	0561	0781	1001	3189	4189	*	T213A343K100(1)S
0.034	A	20	T111A343M100AS	0.3	2	0342	0562	0782	1002	3190	4190	*	T213A343M100(1)S
0.041	A	10	T111A413K100AS	0.3	2	0343	0563	0783	1003	3191	4191	*	T213A413K100(1)S
0.05	A	10	T111A503K100AS	0.3	2	0344	0564	0784	1004	3192	4192	*	T213A503K100(1)S
0.05	A	20	T111A503M100AS	0.3	2	0345	0565	0785	1005	3193	4193	*	T213A503M100(1)S
0.06	A	10	T111A603K100AS	0.3	2	0346	0566	0786	1006	3194	4194	*	T213A603K100(1)S
0.075	A	10	T111A753K100AS	0.3	2	0347	0567	0787	1007	3195	4195	*	T213A753K100(1)S
0.075	A	20	T111A753M100AS	0.3	2	0348	0568	0788	1008	3196	4196	*	T213A753M100(1)S
0.09	A	10	T111A903K100AS	0.3	2	0349	0569	0789	1009	3197	4197	*	T213A903K100(1)S
0.11	A	10	T111A114K100AS	0.3	2	0350	0570	0790	1010	3198	4198	*	T213A114K100(1)S
0.11	A	20	T111A114M100AS	0.3	2	0351	0571	0791	1011	3199	4199	*	T213A114M100(1)S
0.13	A	10	T111A134K100AS	0.3	2	0352	0572	0792	1012	3200	4200	*	T213A134K100(1)S
0.16	A	10	T111A164K100AS	0.3	2	0353	0573	0793	1013	3201	4201	*	T213A164K100(1)S
0.16	A	20	T111A164M100AS	0.3	2	0354	0574	0794	1014	3202	4202	*	T213A164M100(1)S
0.19	A	10	T111A194K100AS	0.3	2	0355	0575	0795	1015	3203	4203	*	T213A194K100(1)S
0.23	A	10	T111A234K100AS	0.3	2	0356	0576	0796	1016	3204	4204	*	T213A234K100(1)S
0.23	A	20	T111A234M100AS	0.3	2	0357	0577	0797	1017	3205	4205	*	T213A234M100(1)S
0.28	A	10	T111A284K100AS	0.3	2	0358	0578	0798	1018	3206	4206	*	T213A284K100(1)S
0.34	B	10	T111B344K100AS	0.3	2	0359	0579	0799	1019	3207	4207	*	T213B344K100(1)S
0.34	B	20	T111B344M100AS	0.3	2	0360	0580	0800	1020	3208	4208	*	T213B344M100(1)S
0.41	B	10	T111B414K100AS	0.4	2	0361	0581	0801	1021	3209	4209	*	T213B414K100(1)S
0.5	B	10	T111B504K100AS	0.5	2	0362	0582	0802	1022	3210	4210	*	T213B504K100(1)S
0.5	B	20	T111B504M100AS	0.5	2	0363	0583	0803	1023	3211	4211	*	T213B504M100(1)S
0.6	B	10	T111B604K100AS	0.5	3	0364	0584	0804	1024	3212	4212	*	T213B604K100(1)S
0.75	B	10	T111B754K100AS	0.7	3	0365	0585	0805	1025	3213	4213	*	T213B754K100(1)S
0.75	B	20	T111B754M100AS	0.7	3	0366	0586	0806	1026	3214	4214	*	T213B754M100(1)S
0.9	B	10	T111B904K100AS	0.7	3	0367	0587	0807	1027	3215	4215	*	T213B904K100(1)S
1.1	B	10	T111B115K100AS	0.9	3	0368	0588	0808	1028	3216	4216	*	T213B115K100(1)S
1.1	B	20	T111B115M100AS	0.9	3	0369	0589	0809	1029	3217	4217	*	T213B115M100(1)S
1.3	B	10	T111B135K100AS	1.1	3	0370	0590	0810	1030	3218	4218	*	T213B135K100(1)S

(1) To complete T213 Series Part Number, insert Failure Rate Symbol in the 13th Character as shown on Page 6. ***Note: D failure rate — Not QPL for 5168 thru 5218**

TANTALUM HERMETICALLY SEALED / AXIAL — MIL-PRF-39003

T222 SERIES — POLAR MINIATURE (CSR09)

KEMET ultra-miniature T222 Series solid tantalum capacitors are designed especially for miniaturization.

The T222 Series capacitors employ a unique glass-to-metal compression end seal which has no protruding eyelet. This flush end seal construction makes T222 Series capacitors ideally suited for all miniature high density packaging applications. The capacitors consist of a dry porous tantalum pellet hermetically sealed in a solder coated metal case with solder coated alloy 52 and solder coated nickel leads.

The T222 series is approved to MIL-PRF-39003/2, all ratings and failure rates.

CAPACITOR OUTLINE DRAWINGS

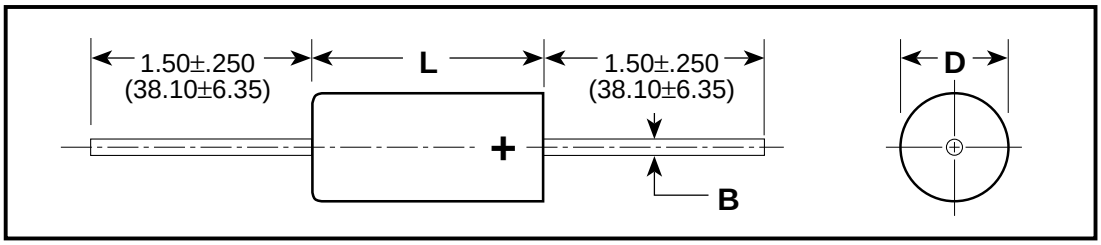

DIMENSIONS — INCHES & (MILLIMETERS)

CASE SIZE	UNINSULATED D ±0.005 (±.13)	UNINSULATED L	INSULATED D	INSULATED L	B WIRE DIAMETER
A	.085 (2.16)	.245 + .015 (6.22 + .38) - .010 (-.25)	.090 ± .009 (2.29 ± .23)	.250 + .031 (6.35 + .79) - .015 (-.38)	.016 + .005 (.41 + .13) - .001 (-.03)
B	.127 (3.23)	.375 ± .015 (.53 ± .38)	.138 ± .010 (3.51 ± .25)	.390 ± .015 (9.91 ± .38)	.016 + .005 (.41 + .13) -.001 (-.03)

ORDERING INFORMATION

T 222 A 225 K 010 B S C*

TANTALUM — T

SERIES (CSR09) — 222

CASE SIZE
A / B — A

PICOFARAD CODE
First two digits represent significant figures.
3rd digit specifies no. of zeros to follow. — 225

CAPACITANCE TOLERANCE
M — ±20 K — ±10 J — ±5 — K

VOLTAGE
at 85°C — 010

FAILURE RATE LEVEL**

GRADED	EXPONENTIAL
B — 0.1%/k hrs.	M — 1%/k hrs.
C — 0.01%/k hrs.	P — 0.1%/k hrs.
D — 0.001%/k hrs.	R — 001%/k hrs.
.	S — 0.001%k hrs.

LEAD MATERIAL
S — Standard
Positive: Alloy 52 (solder coated)
Negative: Solder coated nickel — S

SPECIFICATION
All capacitors are sleeved unless specified. — C*

***Part Number Example: T222A225K010BS (14 digits - no spaces)**

****Failure Rates apply only to military products**

For Military Ordering, see page 4.

CSR09 CAPACITOR MARKINGS PER MIL-PRF-39003

39003	Military specification number
02 - K	Specification sheet number and trademark
2961J	Nonsignificant dash number and “J” for JAN
+333	Polarity, date code (1st digit indicates year and the next two digits indicate the week)
XX	and lot symbol

RATINGS & PART NUMBER REFERENCE

CAPACITANCE µF	CASE SIZE	CAPACITANCE TOLERANCE ±%	KEMET T222 SERIES: KEMET PART NUMBER	D.C. LEAKAGE µA@25°C MAX.	MAX. DISSIPATION FACTOR %@25°C, 120Hz	MIL-PRF-39003 (CSR09) CAPACITORS — DASH NUMBER REFERENCE FAILURE RATE LEVEL (%/1000 HRS.): MIL-PRF-39003/2D EXPONENTIAL: M (1.0)	P (0.1)	R (0.01)	S (0.001)	MIL-PRF-39003/2D GRADED: B (0.1)	C (0.01)	D (0.001)
6 VOLT RATING AT 85°C — 4 VOLT RATING AT 125°C												
2.7	A	5	T222A275J006(1)S	0.6	6	1001	1061	1121	1181	2001	3001	4001
2.7	**A**	**10**	**T222A275K006(1)S**	**0.6**	**6**	**0001**	**0061**	**0121**	**0181**	**2002**	**3002**	**4002**
18.0	B	5	T222B186J006(1)S	1.4	6	1002	1062	1122	1182	2003	3003	4003
18.0	B	10	T222B186K006(1)S	1.4	6	0002	0062	0122	0182	2004	3004	4004
10 VOLT RATING AT 85°C — 7 VOLT RATING AT 125°C												
1.8	A	5	T222A185J010(1)S	0.6	6	1007	1067	1127	1187	2005	3005	4005
1.8	A	10	T222A185K010(1)S	0.6	6	0007	0067	0127	0187	2006	3006	4006
2.2	A	5	T222A225J010(1)S	0.6	6	1008	1068	1128	1188	2007	3007	4007
2.2	**A**	**10**	**T222A225K010(1)S**	**0.6**	**6**	**0008**	**0068**	**0128**	**0188**	**2008**	**3008**	**4008**
10.0	B	5	T222B106J010(1)S	2.0	6	1009	1069	1129	1189	2009	3009	4009
10.0	B	10	T222B106K010(1)S	2.0	6	0009	0069	0129	0189	2010	3010	4010
12.0	B	5	T222B126J010(1)S	2.0	6	1010	1070	1130	1190	2011	3011	4011
12.0	B	10	T222B126K010(1)S	2.0	6	0010	0070	0130	0190	2012	3012	4012
15.0	B	5	T222B156J010(1)S	2.0	6	1011	1071	1131	1191	2013	3013	4013
15.0	B	10	T222B156K010(1)S	2.0	6	0011	0071	0131	0191	2014	3014	4014
15 VOLT RATING AT 85°C — 10 VOLT RATING AT 125°C												
1.0	A	5	T222A105J015(1)S	0.6	6	1012	1072	1132	1192	2015	3015	4015
1.0	A	10	T222A105K015(1)S	0.6	6	0012	0072	0132	0192	2016	3016	4016
1.2	A	5	T222A125J015(1)S	0.6	6	1013	1073	1133	1193	2017	3017	4017
1.2	A	10	T222A125K015(1)S	0.6	6	0013	0073	0133	0193	2018	3018	4018
1.5	A	5	T222A155J015(1)S	0.6	6	1014	1074	1134	1194	2019	3019	4019
1.5	**A**	**10**	**T222A155K015(1)S**	**0.6**	**6**	**0014**	**0074**	**0134**	**0194**	**2020**	**3020**	**4020**
8.2	B	5	T222B825J015(1)S	1.8	6	1015	1075	1135	1195	2021	3021	4021
8.2	B	10	T222B825K015(1)S	1.8	6	0015	0075	0135	0195	2022	3022	4022
20 VOLT RATING AT 85°C — 13 VOLT RATING AT 125°C												
0.56	A	5	T222A564J020(1)S	0.6	3	1016	1076	1136	1196	2023	3023	4023
0.56	A	10	T222A564K020(1)S	0.6	3	0016	0076	0136	0196	2024	3024	4024
0.68	A	5	T222A684J020(1)S	0.6	3	1017	1077	1137	1197	2025	3025	4025
0.68	A	10	T222A684K020(1)S	0.6	3	0017	0077	0137	0197	2026	3026	4026
0.82	A	5	T222A824J020(1)S	0.6	3	1018	1078	1138	1198	2027	3027	4027
0.82	A	10	T222A824K020(1)S	0.6	3	0018	0078	0138	0198	2028	3028	4028
1.0	A	5	T222A105J020(1)S	0.6	3	1019	1079	1139	1199	2029	3029	4029
1.0	**A**	**10**	**T222A105K020(1)S**	**0.6**	**3**	**0019**	**0079**	**0139**	**0199**	**2030**	**3030**	**4030**
3.3	B	5	T222B335J020(1)S	1.0	3	1020	1080	1140	1200	2031	3031	4031
3.3	B	10	T222B335K020(1)S	1.0	3	0020	0080	0140	0200	2032	3032	4032
3.9	B	5	T222B395J020(1)S	2.0	3	1021	1081	1141	1201	2033	3033	4033
3.9	B	10	T222B395K020(1)S	2.0	3	0021	0081	0141	0201	2034	3034	4034
4.7	B	5	T222B475J020(1)S	2.0	3	1022	1082	1142	1202	2035	3035	4035
4.7	**B**	**10**	**T222B475K020(1)S**	**2.0**	**3**	**0022**	**0082**	**0142**	**0202**	**2036**	**3036**	**4036**
5.6	B	5	T222B565J020(1)S	2.0	3	1023	1083	1143	1203	2037	3037	4037
5.6	B	10	T222B565K020(1)S	2.0	3	0023	0083	0143	0203	2038	3038	4038
6.8	B	5	T222B685J020(1)S	2.0	3	1024	1084	1144	1204	2039	3039	4039
6.8	B	10	T222B685K020(1)S	2.0	3	0024	0084	0144	0204	2040	3040	4040
35 VOLT RATING AT 85°C — 23 VOLT RATING AT 125°C												
0.33	A	5	T222A334J035(1)S	0.6	3	1025	1085	1145	1205	2041	3041	4041
0.33	A	10	T222A334K035(1)S	0.6	3	0025	0085	0145	0205	2042	3042	4042
0.39	A	5	T222A394J035(1)S	0.6	3	1026	1086	1146	1206	2043	3043	4043
0.39	A	10	T222A394K035(1)S	0.6	3	0026	0086	0146	0206	2044	3044	4044
0.47	A	5	T222A474J035(1)S	0.6	3	1027	1087	1147	1207	2045	3045	4045
0.47	**A**	**10**	**T222A474K035(1)S**	**0.6**	**3**	**0027**	**0087**	**0147**	**0207**	**2046**	**3046**	**4046**
2.2	B	5	T222B225J035(1)S	1.4	3	1028	1088	1148	1208	2047	3047	4047
2.2	**B**	**10**	**T222B225K035(1)S**	**1.4**	**3**	**0028**	**0088**	**0148**	**0208**	**2048**	**3048**	**4048**
2.7	B	5	T222B275J035(1)S	1.4	3	1029	1089	1149	1209	2049	3049	4049
2.7	B	10	T222B275K035(1)S	1.4	3	0029	0089	0149	0209	2050	3050	4050

(1) To complete Part Number, insert Failure Rate Symbol in the 13th Character as shown on Page 24.
Bold Face lines indicate popular part types and values

RATINGS & PART NUMBER REFERENCE

CAPACITANCE µF	CASE SIZE	CAPACITANCE TOLERANCE ±%	KEMET T222 SERIES: KEMET PART NUMBER	D.C. LEAKAGE µA@25°C MAX.	MAX. DISSIPATION FACTOR %@25°C, 120Hz	MIL-PRF-39003 (CSR09) CAPACITORS — DASH NUMBER REFERENCE FAILURE RATE LEVEL (%/1000 HRS.): MIL-PRF-39003/2D EXPONENTIAL: M (1.0)	P (0.1)	R (0.01)	S (0.001)	MIL-PRF-39003/2D GRADED: B (0.1)	C (0.01)	D (0.001)
50 VOLT RATING AT 85°C — 33 VOLT RATING AT 125°C												
0.22	A	5	T222A224J050(1)S	0.6	3	1030	1090	1150	1210	2051	3051	4051
0.22	A	10	T222A224K050(1)S	0.6	3	0030	0090	0150	0210	2052	3052	4052
0.27	A	5	T222A274J050(1)S	0.6	3	1031	1091	1151	1211	2053	3053	4053
0.27	**A**	**10**	**T222A274K050(1)S**	**0.6**	**3**	**0031**	**0091**	**0151**	**0211**	**2054**	**3054**	**4054**
1.5	B	5	T222B155J050(1)S	1.4	3	1032	1092	1152	1212	2055	3055	4055
1.5	B	10	T222B155K050(1)S	1.4	3	0032	0092	0152	0212	2056	3056	4056
1.8	B	5	T222B185J050(1)S	1.4	3	1033	1093	1153	1213	2057	3057	4057
1.8	**B**	**10**	**T222B185K050(1)S**	**1.4**	**3**	**0033**	**0093**	**0153**	**0213**	**2058**	**3058**	**4058**
75 VOLT RATING AT 85°C — 50 VOLT RATING AT 125°C												
0.047	A	5	T222A473J075(1)S	0.6	3	1034	1094	1154	1214	2059	3059	4059
0.047	A	10	T222A473K075(1)S	0.6	3	0034	0094	0154	0214	2060	3060	4060
0.056	A	5	T222A563J075(1)S	0.6	3	1035	1095	1155	1215	2061	3061	4061
0.056	A	10	T222A563K075(1)S	0.6	3	0035	0095	0155	0215	2062	3062	4062
0.068	A	5	T222A683J075(1)S	0.6	3	1036	1096	1156	1216	2063	3063	4063
0.068	A	10	T222A683K075(1)S	0.6	3	0036	0096	0156	0216	2064	3064	4064
0.082	A	5	T222A823J075(1)S	0.6	3	1037	1097	1157	1217	2065	3065	4065
0.082	A	10	T222A823K075(1)S	0.6	3	0037	0097	0157	0217	2066	3066	4066
0.10	A	5	T222A104J075(1)S	0.6	3	1038	1098	1158	1218	2067	3067	4067
0.10	**A**	**10**	**T222A104K075(1)S**	**0.6**	**3**	**0038**	**0098**	**0158**	**0218**	**2068**	**3068**	**4068**
0.12	A	5	T222A124J075(1)S	0.6	3	1039	1099	1159	1219	2069	3069	4069
0.12	A	10	T222A124K075(1)S	0.6	3	0039	0099	0159	0219	2070	3070	4070
0.15	A	5	T222A154J075(1)S	0.6	3	1040	1100	1160	1220	2071	3071	4071
0.15	A	10	T222A154K075(1)S	0.6	3	0040	0100	0160	0220	2072	3072	4072
0.18	A	5	T222A184J075(1)S	0.6	3	1041	1101	1161	1221	2073	3073	4073
0.18	A	10	T222A184K075(1)S	0.6	3	0041	0101	0161	0221	2074	3074	4074
0.22	B	5	T222B224J075(1)S	0.6	3	1042	1102	1162	1222	2075	3075	4075
0.22	B	10	T222B224K075(1)S	0.6	3	0042	0102	0162	0222	2076	3076	4076
0.27	B	5	T222B274J075(1)S	0.6	3	1043	1103	1163	1223	2077	3077	4077
0.27	B	10	T222B274K075(1)S	0.6	3	0043	0103	0163	0223	2078	3078	4078
0.33	B	5	T222B334J075(1)S	0.6	3	1044	1104	1164	1224	2079	3079	4079
0.33	B	10	T222B334K075(1)S	0.6	3	0044	0104	0164	0224	2080	3080	4080
0.39	B	5	T222B394J075(1)S	0.6	3	1045	1105	1165	1225	2081	3081	4081
0.39	B	10	T222B394K075(1)S	0.6	3	0045	0105	0165	0225	2082	3082	4082
0.47	B	5	T222B474J075(1)S	0.6	3	1046	1106	1166	1226	2083	3083	4083
0.47	B	10	T222B474K075(1)S	0.6	3	0046	0106	0166	0226	2084	3084	4084
0.56	B	5	T222B564J075(1)S	0.6	3	1047	1107	1167	1227	2085	3085	4085
0.56	B	10	T222B564K075(1)S	0.6	3	0047	0107	0167	0227	2086	3086	4086
0.68	B	5	T222B684J075(1)S	0.6	3	1048	1108	1168	1228	2087	3087	4087
0.68	B	10	T222B684K075(1)S	0.6	3	0048	0108	0168	0228	2088	3088	4088
0.82	B	5	T222B824J075(1)S	0.7	3	1049	1109	1169	1229	2089	3089	4089
0.82	B	10	T222B824K075(1)S	0.7	3	0049	0109	0169	0229	2090	3090	4090
1.0	B	5	T222B105J075(1)S	0.9	3	1050	1110	1170	1230	2091	3091	4091
1.0	B	10	T222B105K075(1)S	0.9	3	0050	0110	0170	0230	2092	3092	4092
1.2	B	5	T222B125J075(1)S	0.9	3	1051	1111	1171	1231	2093	3093	4093
1.2	B	10	T222B125K075(1)S	0.9	3	0051	0111	0171	0231	2094	3094	4094

(1) To complete Part Number, insert Failure Rate Symbol in the 13th Character as shown on Page 24.
Bold Face lines indicate popular part types and values

TANTALUM HERMETICALLY SEALED / AXIAL — MIL-PRF-39003

T140 SERIES — POLAR TYPE & T242 (CSR23)

KEMET standard MIL case hermetically sealed T140 Series (Extended Capacitance Range) are compact, ruggedly built, designed for miniturized circuitry, and are especially suited for coupling, bypass, filtering and R-C timing circuits. They exhibit excellent stability, low DC leakage current, dissipation factor, and ESR/impedance over a wide temperature and frequency range.

Available in standard EIA capacitance values from .82-1200 µF in ±20%, ±10%, and ±5% tolerances and working voltages from 6-60 VDC.

Included in the following Series table is a complete listing of CSR23 qualified MIL-C-39003/3 capacitors.

DIMENSIONS — INCHES & (MILLIMETERS)

CASE SIZE	UNINSULATED D ±0.005 ±(.13)	UNINSULATED L ±0.031 ±(.79)	INSULATED D ±0.010 ±(.25)	INSULATED L ±0.031 ±(.79)	B ±0.002 ±(.05)	C MAX.
A	0.125 (3.18)	0.250 (6.35)	0.135 (3.43)	0.286 (7.26)	0.020 (.51)	0.422 (10.72)
B	0.175 (4.45)	0.438 (11.13)	0.185 (4.70)	0.474 (12.04)	0.020 (.51)	0.610 (15.49)
C	0.279 (7.09)	0.650 (16.51)	0.289 (7.34)	0.686 (17.42)	0.025 (.64)	0.822 (20.88)
D	0.341 (8.66)	0.750 (19.05)	0.351 (8.92)	0.786 (19.96)	0.025 (.64)	0.922 (23.42)

MARKING INFORMATION*

A, B, C & D CASES

+K 10%	Polarity, Manufacturer's Identification and Capacitance Tol.
5R6 µF	Normal Capacitance — (µF) ("R" indicates decimal)
10V	Voltage
0312	Date Code (e.g.: 0312)

*** For Military Marking, see page 4.**

CAPACITOR OUTLINE DRAWINGS

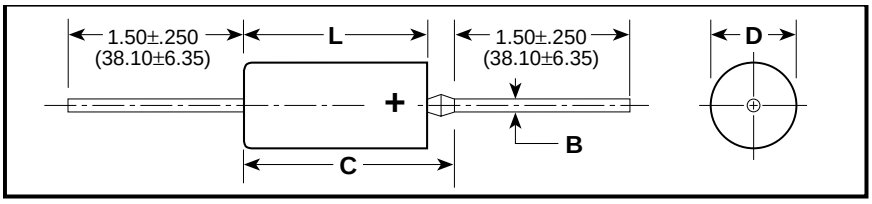

Effective September 30, 2005, the KEMET T140 Series is RoHS compliant by ordering the "T" (100% tin) end termination in the 14th position of the part number.

RATINGS & PART NUMBER REFERENCE

CAPACITANCE µF	CASE SIZE	CAPACITANCE TOLERANCE ±%	KEMET T140 PART NUMBER	D.C. LEAKAGE µA@25°C MAX.	MAX. DISSIPATION FACTOR %@25°C, 120Hz	MIL-PRF-39003 (CSR23) CAPACITORS — DASH NUMBER REFERENCE FAILURE RATE LEVEL (%/1000 HRS.) — MIL-PRF-39003/3F EXPONENTIAL: M (1.0)	P (0.1)	R (0.01)	S (0.001)	MIL-PRF-39003/3F GRADED: B (0.1)	C (0.01)	D (0.001)	KEMET EQUIVALENT MILITARY PART NUMBER
6 VOLT RATING AT 85°C — 4 VOLT RATING AT 125°C													
8.2	A	10, 20	T140A825(1)006AS	0.9	6								
10.0	**A**	**10**	**T140A106K006AS**	**0.9**	**6**	**0101**	**0201**	**0301**	**0401**	**2001**	**3001**	**4001**	**T242A106K006(2)S**
10.0	**A**	**20**	**T140A106M006AS**	**0.9**	**6**	**0102**	**0202**	**0302**	**0402**	**2002**	**3002**	**4002**	**T242A106M006(2)S**
12.0	A	10	T140A126K006AS	1.0	6	0103	0203	0303	0403	2003	3003	4003	T242A126K006(2)S
12.0	A	20	T140A126M006AS	1.0	6								
68.0	B	10, 20	T140B686(1)006AS	3.0	6								
82.0	B	10, 20	T140B826(1)006AS	3.0	6								
100.0	**B**	**10**	**T140B107K006AS**	**6.0**	**6**	**0104**	**0204**	**0304**	**0404**	**2004**	**3004**	**4004**	**T242B107K006(2)S**
100.0	**B**	**20**	**T140B107M006AS**	**6.0**	**6**	**0105**	**0205**	**0305**	**0405**	**2005**	**3005**	**4005**	**T242B107M006(2)S**
220.0	C	10, 20	T140C227(1)006AS	10.0	8								
270.0	C	10, 20	T140C277(1)006AS	10.0	8								
330.0	C	10	T140C337K006AS	10.0	8	0106	0206	0306	0406	2006	3006	4006	T242C337K006(2)S
330.0	C	20	T140C337M006AS	10.0	8	0107	0207	0307	0407	2007	3007	4007	T242C337M006(2)S
390.0	C	10	T140C397K006AS	10.0	10	0108	0208	0308	0408	2008	3008	4008	T242C397K006(2)S
390.0	C	20	T140C397M006AS	10.0	10								
470.0	**C**	**10**	**T140C477K006AS**	**10.0**	**10**	**0109**	**0209**	**0309**	**0409**	**2009**	**3009**	**4009**	**T242C477K006(2)S**
470.0	**C**	**20**	**T140C477M006AS**	**10.0**	**10**	**0110**	**0210**	**0310**	**0410**	**2010**	**3010**	**4010**	**T242C477M006(2)S**
560.0	D	10, 20	T140D567(1)006AS	20.0	10								
680.0	D	10	T140D687K006AS	20.0	10	0111	0211	0311	0411	2011	3011	4011	T242D687K006(2)S
680.0	D	20	T140D687M006AS	20.0	10	0112	0212	0312	0412	2012	3012	4012	T242D687M006(2)S
820.0	D	10	T140D827K006AS	20.0	10	0113	0213	0313	0413	2013	3013	4013	T242D827K006(2)S
820.0	D	20	T140D827M006AS	20.0	10								
1000.0	**D**	**10**	**T140D108K006AS**	**20.0**	**10**	**0114**	**0214**	**0314**	**0414**	**2014**	**3014**	**4014**	**T242D108K006(2)S**
1000.0	**D**	**20**	**T140D108M006AS**	**20.0**	**10**	**0115**	**0215**	**0315**	**0415**	**2015**	**3015**	**4015**	**T242D108M006(2)S**
1200.0	D	20	T140D128M006AS	20.0	10								

(1) To complete T140 Series Part Number, insert Capacitance Tolerance Symbol in the 9th Character as shown on Page 6.
(2) To complete the T242 Series Part Number, insert Failure Rate Symbol in the 13th Character.
Bold Face lines indicate popular part types and values.
For ordering information, see page 4 (Military) and Page 6.

RATINGS & PART NUMBER REFERENCE

CAPACITANCE µF	CASE SIZE	CAPACITANCE TOLERANCE ±%	KEMET T140 PART NUMBER	D.C. LEAKAGE µA@25°C MAX.	MAX. DISSIPATION FACTOR %@25°C, 120Hz	MIL-PRF-39003 (CSR23) CAPACITORS — DASH NUMBER REFERENCE FAILURE RATE LEVEL (%/1000 HRS.) — MIL-PRF-39003/3F EXPONENTIAL: M (1.0)	P (0.1)	R (0.01)	S (0.001)	MIL-PRF-39003/3F GRADED: B (0.1)	C (0.01)	D (0.001)	KEMET EQUIVALENT MILITARY PART NUMBER
10 VOLT RATING AT 85°C — 7 VOLT RATING AT 125°C													
5.6	A	10, 20	T140A565(1)010AS	1.0	4								
6.8	A	10	T140A685K010AS	1.0	6	0116	0216	0316	0416	2016	3016	4016	T242A685K010(2)S
6.8	A	20	T140A685M010AS	1.0	6	0117	0217	0317	0417	2017	3017	4017	T242A685M010(2)S
8.2	**A**	**10**	**T140A825K010AS**	**1.2**	**6**	**0118**	**0218**	**0318**	**0418**	**2018**	**3018**	**4018**	**T242A825K010(2)S**
8.2	**A**	**20**	**T140A825M010AS**	**1.2**	**6**								
47.0	B	10	T140B476K010AS	4.0	6	0119	0219	0319	0419	2019	3019	4019	T242B476K010(2)S
47.0	B	20	T140B476M010AS	4.0	6	0120	0220	0320	0420	2020	3020	4020	T242B476M010(2)S
56.0	B	10	T140B566K010AS	5.0	6	0121	0221	0321	0421	2021	3021	4021	T242B566K010(2)S
56.0	B	20	T140B566M010AS	5.0	6								
68.0	**B**	**10**	**T140B686K010AS**	**6.0**	**6**	**0122**	**0222**	**0322**	**0422**	**2022**	**3022**	**4022**	**T242B686K010(2)S**
68.0	**B**	**20**	**T140B686M010AS**	**6.0**	**6**	**0123**	**0223**	**0323**	**0423**	**2023**	**3023**	**4023**	**T242B686M010(2)S**
82.0	**B**	**10**	**T140B826K010AS**	**7.0**	**6**	**0124**	**0224**	**0324**	**0424**	**2024**	**3024**	**4024**	**T242B826K010(2)S**
82.0	**B**	**20**	**T140B826M010AS**	**7.0**	**6**								
150.0	C	10, 20	T140C157(1)010AS	8.0	8								
180.0	C	10, 20	T140C187(1)010AS	8.0	8								
220.0	**C**	**10**	**T140C227K010AS**	**12.0**	**8**	**0125**	**0225**	**0325**	**0425**	**2025**	**3025**	**4025**	**T242C227K010(2)S**
220.0	**C**	**20**	**T140C227M010AS**	**12.0**	**8**	**0126**	**0226**	**0326**	**0426**	**2026**	**3026**	**4026**	**T242C227M010(2)S**
270.0	C	10	T140C277K010AS	13.0	8	0127	0227	0327	0427	2027	3027	4027	T242C277K010(2)S
270.0	C	20	T140C277M010AS	13.0	8								
330.0	D	10, 20	T140D337(1)010AS	16.0	8								
390.0	D	10	T140D397K010AS	16.0	10	0128	0228	0328	0428	2028	3028	4028	T242D397K010(2)S
390.0	D	20	T140D397M010AS	16.0	10								
470.0	D	10	T140D477K010AS	16.0	10	0129	0229	0329	0429	2029	3029	4029	T242D477K010(2)S
470.0	D	20	T140D477M010AS	16.0	10	0130	0230	0330	0430	2030	3030	4030	T242D477M010(2)S
560.0	**D**	**10**	**T140D567K010AS**	**20.0**	**10**	**0131**	**0231**	**0331**	**0431**	**2031**	**3031**	**4031**	**T242D567K010(2)S**
560.0	**D**	**20**	**T140D567M010AS**	**20.0**	**10**								
15 VOLT RATING AT 85°C — 10 VOLT RATING AT 125°C													
3.9	A	10, 20	T140A395(1)015AS	1.0	4								
4.7	A	10	T140A475K015AS	1.0	4	0132	0232	0332	0432	2032	3032	4032	T242A475K015(2)S
4.7	A	20	T140A475M015AS	1.0	4	0133	0233	0333	0433	2033	3033	4033	T242A475M015(2)S
5.6	A	10	T140A565K015AS	1.3	4	0134	0234	0334	0434	2034	3034	4034	T242A565K015(2)S
5.6	A	20	T140A565M015AS	1.3	4								
27.0	B	10, 20	T140B276(1)015AS	3.0	6								
33.0	B	10	T140B336K015AS	5.0	6	0135	0235	0335	0435	2035	3035	4035	T242B336K015(2)S
33.0	B	20	T140B336M015AS	5.0	6	0136	0236	0336	0436	2036	3036	4036	T242B336M015(2)S
39.0	**B**	**10**	**T140B396K015AS**	**5.3**	**6**	**0137**	**0237**	**0337**	**0437**	**2037**	**3037**	**4037**	**T242B396K015(2)S**
39.0	**B**	**20**	**T140B396M015AS**	**5.3**	**6**								
82.0	C	10, 20	T140C826(1)015AS	8.0	6								
100.0	C	10, 20	T140C107(1)015AS	10.0	6								
120.0	C	10, 20	T140C127(1)015AS	10.0	6								
150.0	C	10	T140C157K015AS	15.0	8	0138	0238	0338	0438	2038	3038	4038	T242C157K015(2)S
150.0	C	20	T140C157M015AS	15.0	8	0139	0239	0339	0439	2039	3039	4039	T242C157M015(2)S
180.0	**C**	**10**	**T140C187K015AS**	**15.0**	**8**	**0140**	**0240**	**0340**	**0440**	**2040**	**3040**	**4040**	**T242C187K015(2)S**
180.0	**C**	**20**	**T140C187M015AS**	**15.0**	**8**								
220.0	D	10	T140D227K015AS	20.0	8	0141	0241	0341	0441	2041	3041	4041	T242D227K015(2)S
220.0	D	20	T140D227M015AS	20.0	8	0142	0242	0342	0442	2042	3042	4042	T242D227M015(2)S
270.0	D	10	T140D277K015AS	20.0	8	0143	0243	0343	0443	2043	3043	4043	T242D277K015(2)S
270.0	D	20	T140D277M015AS	20.0	8								
330.0	**D**	**10**	**T140D337K015AS**	**20.0**	**8**	**0144**	**0244**	**0344**	**0444**	**2044**	**3044**	**4044**	**T242D337K015(2)S**
330.0	**D**	**20**	**T140D337M015AS**	**20.0**	**8**	**0145**	**0245**	**0345**	**0445**	**2045**	**3045**	**4045**	**T242D337M015(2)S**

(1) To complete T140 Series Part Number, insert Capacitance Tolerance Symbol in the 9th Character as shown on Page 6.
(2) To complete the T242 Series Part Number, insert Failure Rate Symbol in the 13th Character.

RATINGS & PART NUMBER REFERENCE

CAPACITANCE µF	CASE SIZE	CAPACITANCE TOLERANCE ±%	KEMET T140 KEMET PART NUMBER	D.C. LEAKAGE µA@25°C MAX.	MAX. DISSIPATION FACTOR %@25°C, 120Hz	MIL-PRF-39003 (CSR23) CAPACITORS — DASH NUMBER REFERENCE FAILURE RATE LEVEL (%/1000 HRS.) — MIL-PRF-39003/3F EXPONENTIAL: M (1.0)	P (0.1)	R (0.01)	S (0.001)	MIL-PRF-39003/3F GRADED: B (0.1)	C (0.01)	D (0.001)	KEMET EQUIVALENT MILITARY PART NUMBER
20 VOLT RATING AT 85°C — 13 VOLT RATING AT 125°C													
2.7	A	10	T140A275K020AS	0.8	4	0146	0246	0346	0446	2046	3046	4046	T242A275K020(2)S
2.7	A	20	T140A275M020AS	0.8	4								
3.3	A	10	T140A335K020AS	1.0	4	0147	0247	0347	0447	2047	3047	4047	T242A335K020(2)S
3.3	A	20	T140A335M020AS	1.0	4	0148	0248	0348	0448	2048	3048	4048	T242A335M020(2)S
3.9	A	10	T140A395K020AS	1.2	4	0149	0249	0349	0449	2049	3049	4049	T242A395K020(2)S
3.9	A	20	T140A395M020AS	1.2	4								
18.0	B	10	T140B186K020AS	3.0	6	0150	0250	0350	0450	2050	3050	4050	T242B186K020(2)S
18.0	B	20	T140B186M020AS	3.0	6								
22.0	**B**	**10**	**T140B226K020AS**	**3.0**	**6**	**0151**	**0251**	**0351**	**0451**	**2051**	**3051**	**4051**	**T242B226K020(2)S**
22.0	**B**	**20**	**T140B226M020AS**	**3.0**	**6**	**0152**	**0252**	**0352**	**0452**	**2052**	**3052**	**4052**	**T242B226M020(2)S**
27.0	**B**	**10**	**T140B276K020AS**	**4.0**	**6**	**0153**	**0253**	**0353**	**0453**	**2053**	**3053**	**4053**	**T242B276K020(2)S**
27.0	**B**	**20**	**T140B276M020AS**	**4.0**	**6**								
56.0	C	10	T140C566K020AS	7.0	6	0154	0254	0354	0454	2054	3054	4054	T242C566K020(2)S
56.0	C	20	T140C566M020AS	7.0	6								
68.0	C	10	T140C686K020AS	8.0	6	0155	0255	0355	0455	2055	3055	4055	T242C686K020(2)S
68.0	C	20	T140C686M020AS	8.0	6	0156	0256	0356	0456	2056	3056	4056	T242C686M020(2)S
82.0	C	10	T140C826K020AS	10.0	6	0157	0257	0357	0457	2057	3057	4057	T242C826K020(2)S
82.0	C	20	T140C826M020AS	10.0	6								
100.0	**C**	**10**	**T140C107K020AS**	**12.0**	**6**	**0158**	**0258**	**0358**	**0458**	**2058**	**3058**	**4058**	**T242C107K020(2)S**
100.0	**C**	**20**	**T140C107M020AS**	**12.0**	**6**	**0159**	**0259**	**0359**	**0459**	**2059**	**3059**	**4059**	**T242C107M020(2)S**
120.0	C	10	T140C127K020AS	12.0	6	0160	0260	0360	0460	2060	3060	4060	T242C127K020(2)S
120.0	C	20	T140C127M020AS	12.0	6								
150.0	D	10	T140D157K020AS	15.0	8	0161	0261	0361	0461	2061	3061	4061	T242D157K020(2)S
150.0	D	20	T140D157M020AS	15.0	8	0162	0262	0362	0462	2062	3062	4062	T242D157M020(2)S
180.0	**D**	**10**	**T140D187K020AS**	**15.0**	**8**	**0163**	**0263**	**0363**	**0463**	**2063**	**3063**	**4063**	**T242D187K020(2)S**
180.0	**D**	**20**	**T140D187M020AS**	**15.0**	**8**								
30 VOLT RATING AT 85°C — 20 VOLT RATING AT 125°C													
1.2	A	10, 20	T140A125(1)030AS	1.0	4								
1.5	A	10, 20	T140A155(1)030AS	1.0	4								
1.8	A	10, 20	T140A185(1)030AS	1.0	4								
2.2	**A**	**10, 20**	**T140A225(1)030AS**	**1.0**	**4**								
2.7	**A**	**10, 20**	**T140A275(1)030AS**	**1.0**	**4**								
12.0	B	10, 20	T140B126(1)030AS	3.0	4								
15.0	B	10, 20	T140B156(1)030AS	3.0	4								
18.0	**B**	**10, 20**	**T140B186(1)030AS**	**3.0**	**4**								
33.0	**C**	**10, 20**	**T140C336(1)030AS**	**6.0**	**6**								
39.0	**C**	**10, 20**	**T140C396(1)030AS**	**6.0**	**6**								
47.0	**C**	**10, 20**	**T140C476(1)030AS**	**7.0**	**6**								
56.0	**C**	**10, 20**	**T140C566(1)030AS**	**7.0**	**6**								
68.0	**C**	**10, 20**	**T140C686(1)030AS**	**7.0**	**6**								
82.0	D	10, 20	T140D826(1)030AS	10.0	6								
100.0	**D**	**10, 20**	**T140D107(1)030AS**	**10.0**	**8**								

(1) To complete T140 Series Part Number, insert Capacitance Tolerance Symbol in the 9th Character as shown on Page 6.
(2) To complete the T242 Series Part Number, insert Failure Rate Symbol in the 13th Character.
Bold Face lines indicate popular part types and values.

RATINGS & PART NUMBER REFERENCE

CAPACITANCE µF	CASE SIZE	CAPACITANCE TOLERANCE ±%	KEMET T140 PART NUMBER	D.C. LEAKAGE µA@25°C MAX.	MAX. DISSIPATION FACTOR %@25°C, 120Hz	MIL-PRF-39003 (CSR23) CAPACITORS — DASH NUMBER REFERENCE FAILURE RATE LEVEL (%/1000 HRS.) — MIL-PRF-39003/3F EXPONENTIAL: M (1.0)	P (0.1)	R (0.01)	S (0.001)	MIL-PRF-39003/3F GRADED: B (0.1)	C (0.01)	D (0.001)	KEMET EQUIVALENT MILITARY PART NUMBER
35 VOLT RATING AT 85°C — 23 VOLT RATING AT 125°C													
1.2	A	10, 20	T140A125(1)035AS	0.6	4								
1.5	A	10, 20	T140A155(1)035AS	0.8	4								
1.8	A	10	T140A185K035AS	1.0	4	0164	0264	0364	0464	2064	3064	4064	T242A185K035(2)S
1.8	A	20	T140A185M035AS	1.0	4								
8.2	B	10	T140B825K035AS	3.0	4	0165	0265	0365	0465	2065	3065	4065	T242B825K035(2)S
8.2	B	20	T140B825M035AS	3.0	4								
10.0	**B**	**10**	**T140B106K035AS**	**3.0**	**4**	**0166**	**0266**	**0366**	**0466**	**2066**	**3066**	**4066**	**T242B106K035(2)S**
10.0	**B**	**20**	**T140B106M035AS**	**3.0**	**4**	**0167**	**0267**	**0367**	**0467**	**2067**	**3067**	**4067**	**T242B106M035(2)S**
27.0	C	10, 20	T140C276(1)035AS	7.0	6								
33.0	C	10	T140C336K035AS	8.0	6	0168	0268	0368	0468	2068	3068	4068	T242C336K035(2)S
33.0	C	20	T140C336M035AS	8.0	6	0169	0269	0369	0469	2069	3069	4069	T242C336M035(2)S
39.0	C	10	T140C396K035AS	10.0	6	0170	0270	0370	0470	2070	3070	4070	T242C396K035(2)S
39.0	C	20	T140C396M035AS	10.0	6								
47.0	**C**	**10**	**T140C476K035AS**	**10.0**	**6**	**0171**	**0271**	**0371**	**0471**	**2071**	**3071**	**4071**	**T242C476K035(2)S**
47.0	**C**	**20**	**T140C476M035AS**	**10.0**	**6**	**0172**	**0272**	**0372**	**0472**	**2072**	**3072**	**4072**	**T242C476M035(2)S**
56.0	D	10	T140D566K035AS	12.0	6	0173	0273	0373	0473	2073	3073	4073	T242D566K035(2)S
56.0	D	20	T140D566M035AS	12.0	6								
68.0	**D**	**10**	**T140D686K035AS**	**12.0**	**6**	**0174**	**0274**	**0374**	**0474**	**2074**	**3074**	**4074**	**T242D686K035(2)S**
68.0	**D**	**20**	**T140D686M035AS**	**12.0**	**6**	**0175**	**0275**	**0375**	**0475**	**2075**	**3075**	**4075**	**T242D686M035(2)S**
82.0	D	10, 20	T140D826(1)035AS	20.0	8								
100.0	D	10, 20	T140D107(1)035AS	20.0	8								
50 VOLT RATING AT 85°C — 33 VOLT RATING AT 125°C													
1.2	A	10	T140A125K050AS	0.6	4	0176	0276	0376	0476	2076	3076	4076	T242A125K050(2)S
1.2	A	20	T140A125M050AS	0.6	4								
1.5	A	10	T140A155K050AS	0.8	4	0177	0277	0377	0477	2077	3077	4077	T242A155K050(2)S
1.5	A	20	T140A155M050AS	0.8	4	0178	0278	0378	0478	2078	3078	4078	T242A155M050(2)S
5.6	B	10	T140B565K050AS	2.5	4	0179	0279	0379	0479	2079	3079	4079	T242B565K050(2)S
5.6	B	20	T140B565M050AS	2.5	4								
6.8	**B**	**10**	**T140B685K050AS**	**2.5**	**4**	**0180**	**0280**	**0380**	**0480**	**2080**	**3080**	**4080**	**T242B685K050(2)S**
6.8	**B**	**20**	**T140B685M050AS**	**2.5**	**4**	**0181**	**0281**	**0381**	**0481**	**2081**	**3081**	**4081**	**T242B685M050(2)S**
22.0	**C**	**10**	**T140C226K050AS**	**7.0**	**6**	**0182**	**0282**	**0382**	**0482**	**2082**	**3082**	**4082**	**T242C226K050(2)S**
22.0	**C**	**20**	**T140C226M050AS**	**7.0**	**6**	**0183**	**0283**	**0383**	**0483**	**2083**	**3083**	**4083**	**T242C226M050(2)S**
27.0	**C**	**10**	**T140C276K050AS**	**8.0**	**6**	**0184**	**0284**	**0384**	**0484**	**2084**	**3084**	**4084**	**T242C276K050(2)S**
27.0	**C**	**20**	**T140C276M050AS**	**8.0**	**6**								
33.0	D	10	T140D336K050AS	10.0	6	0185	0285	0385	0485	2085	*	*	T242D336K050(2)S
33.0	D	20	T140D336M050AS	10.0	6	0186	0286	0386	0486	2086	*	*	T242D336M050(2)S
39.0	**D**	**10**	**T140D396K050AS**	**10.0**	**6**	**0187**	**0287**	**0387**	**0487**	**2087**	*	*	**T242D396K050(2)S**
39.0	**D**	**20**	**T140D396M050AS**	**10.0**	**6**								
47.0	D	20	T140D476M050AS	10.0	6								
60 VOLT RATING AT 85°C — 40 VOLT RATING AT 125°C													
0.82	A	10, 20	T140A824(1)060AS	0.5	4								
1.0	A	10, 20	T140A105(1)060AS	0.5	4								
4.7	B	10, 20	T140B475(1)060AS	3.0	4								
5.6	B	10, 20	T140B565(1)060AS	3.0	4								
15.0	C	10, 20	T140C156(1)060AS	5.0	6								
18.0	C	10, 20	T140C186(1)060AS	6.0	6								
22.0	**C**	**10, 20**	**T140C226(1)060AS**	**7.0**	**6**								
27.0	D	10, 20	T140D276(1)060AS	10.0	6								
33.0	**D**	**10, 20**	**T140D336(1)060AS**	**10.0**	**6**								

(1) To complete T140 Series Part Number, insert Capacitance Tolerance Symbol in the 9th Character as shown on Page 6.
(2) To complete the T242 Series Part Number, insert Failure Rate Symbol in the 13th Character.
*Note: C Failure Rate not QPL for -3085 thru 3087
D Failure Rate not QPL for -4085 thru 4087
Bold Face lines indicate popular part types and values.

TANTALUM HERMETICALLY SEALED / AXIAL — MIL-PRF-39003

T252 (CSR33) SERIES

Available from 1.2 µF to 1000 µF, 6VDC to 50 VDC, these high capacitance-to-volume ratio, hermetically sealed solid tantalum capacitors are offered in standard MIL style A, B, C, and D cases. They meet or exceed the environmental and mechanical requirements of MIL-C-39003. Designed to operate from -55°C to +125°C, they exhibit exceptionally low DC leakage, dissipation factor and impedance characteristics. They are ideal for coupling, bypass, filtering and timing circuits, and are excellent substitutes for wet tantalums in low voltage applications. They are available in style CSR33 (T252 Series) per MIL-PRF-39003/06.

CAPACITOR OUTLINE DRAWINGS

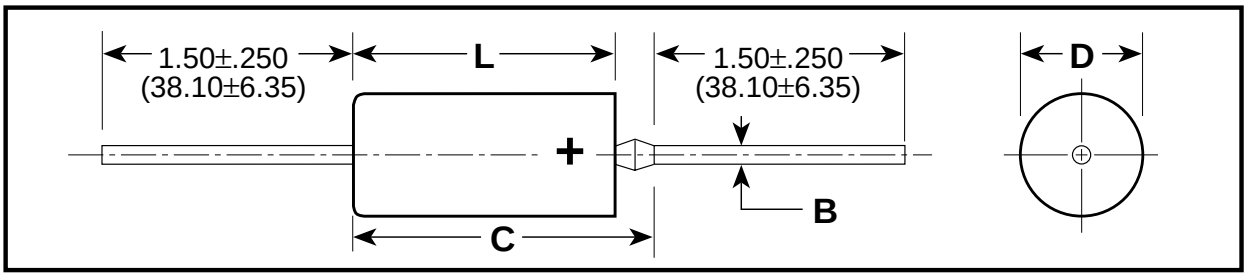

DIMENSIONS — INCHES & (MILLIMETERS)

CASE SIZE	UNINSULATED D ±0.005 (±.13)	UNINSULATED L ±0.031 (±.79)	INSULATED D ±0.010 (±.25)	INSULATED L ±0.031 (±.79)	B ±0.002 (±.05)	C MAX.
A	0.125 (3.18)	0.250 (6.35)	0.135 (3.43)	0.286 (7.26)	0.020 (.51)	0.422 (10.72)
B	0.175 (4.45)	0.438 (11.13)	0.185 (4.70)	0.474 (12.04)	0.020 (.51)	0.610 (15.49)
C	0.279 (7.09)	0.650 (16.51)	0.289 (7.34)	0.686 (17.42)	0.025 (.64)	0.822 (20.88)
D	0.341 (8.66)	0.750 (19.05)	0.351 (8.92)	0.786 (19.96)	0.025 (.64)	0.922 (23.42)

ORDERING INFORMATION

T 252 A 125 K 050 M S C*

TANTALUM — T

SERIES
252 — CSR33

CASE SIZE
A / B / C / D

PICOFARAD CODE
First two digits represent significant figures.
3rd digit specifies no. of zeros to follow.

CAP. TOLERANCE
M — ±20%
K — ±10%
J — ±5%

VOLTAGE RATING
At 85°C

FAILURE RATE**

GRADED	EXPONENTIAL
B — 0.1%/k hrs.	M — 1%/k hrs.
C — 0.01%/k hrs.	P — 0.1%/k hrs.
D — 0.001%/k hrs.	R — 0.01%/k hrs.
	S — 0.001%/k hrs.

LEAD MATERIAL
S — Standard

SPECIFICATION
All capacitors are sleeved unless specified.

***Part Number Example: T252A125K050MS (14 digits - no spaces)**

For Military Marking Information, see page 4.

RATINGS & PART NUMBER REFERENCE

CAPACITANCE µF	CASE SIZE	CAPACITANCE TOLERANCE ±%	KEMET T252 SERIES: D.C. LEAKAGE µA@25°C MAX.	MAX. DISSIPATION FACTOR %@25°C, 120Hz	DASH NUMBER REFERENCE FAILURE RATE LEVEL (%/1000 HRS.) MIL-PRF-39003/6C EXPONENTIAL: M (1.0)	P (0.1)	R (0.01)	S (0.001)	MIL-PRF-39003/6C GRADED: B (0.1)	C (0.01)	D (0.001)	MIL-PRF-39003 (CSR33) CAPACITORS: KEMET EQUIVALENT MILITARY PART NUMBER
6 VOLT RATING AT 85°C												
10.0	A	10	0.5	6	0001	0101	0201	0301	2001	3001	4001	T252A106K006(1)S
10.0	A	20	0.5	6	0002	0102	0202	0302	2002	3002	4002	T252A106M006(1)S
12.0	A	10	0.5	6	0003	0103	0203	0303	2003	3003	4003	T252A126K006(1)S
100.0	B	10	1.0	8	0004	0104	0204	0304	2004	3004	4004	T252B107K006(1)S
100.0	B	20	1.0	8	0005	0105	0205	0305	2005	3005	4005	T252B107M006(1)S
330.0	C	10	2.0	8	0006	0106	0206	0306	2006	3006	4006	T252C337K006(1)S
330.0	C	20	2.0	8	0007	0107	0207	0307	2007	3007	4007	T252C337M006(1)S
390.0	C	10	2.0	10	0008	0108	0208	0308	2008	3008	4008	T252C397K006(1)S
470.0	C	10	2.0	10	0009	0109	0209	0309	2009	3009	4009	T252C477K006(1)S
470.0	C	20	2.0	10	0010	0110	0210	0310	2010	3010	4010	T252C477M006(1)S
680.0	D	10	5.0	10	0011	0111	0211	0311	2011	3011	4011	T252D687K006(1)S
680.0	D	20	5.0	10	0012	0112	0212	0312	2012	3012	4012	T252D687M006(1)S
820.0	D	10	5.0	10	0013	0113	0213	0313	2013	3013	4013	T252D827K006(1)S
1000.0	D	10	5.0	10	0014	0114	0214	0314	2014	3014	4014	T252D108K006(1)S
1000.0	D	20	5.0	10	0015	0115	0215	0315	2015	3015	4015	T252D108M006(1)S
10 VOLT RATING AT 85°C												
6.8	A	10	.5	6	0016	0116	0216	0316	2016	3016	4016	T252A685K010(1)S
6.8	A	20	.5	6	0017	0117	0217	0317	2017	3017	4017	T252A685M010(1)S
8.2	A	10	.5	6	0018	0118	0218	0318	2018	3018	4018	T252A825K010(1)S
47.0	B	10	1.0	6	0019	0119	0219	0319	2019	3019	4019	T252B476K010(1)S
47.0	B	20	1.0	6	0020	0120	0220	0320	2020	3020	4020	T252B476M010(1)S
56.0	B	10	1.0	6	0021	0121	0221	0321	2021	3021	4021	T252B566K010(1)S
68.0	B	10	1.0	6	0022	0122	0222	0322	2022	3022	4022	T252B686K010(1)S
68.0	B	20	1.0	6	0023	0123	0223	0323	2023	3023	4023	T252B686M010(1)S
82.0	B	10	1.0	6	0024	0124	0224	0324	2024	3024	4024	T252B826K010(1)S
220.0	C	10	1.0	8	0025	0125	0225	0325	2025	3025	4025	T252C227K010(1)S
220.0	C	20	1.0	8	0026	0126	0226	0326	2026	3026	4026	T252C227M010(1)S
270.0	C	10	2.0	8	0027	0127	0227	0327	2027	3027	4027	T252C277K010(1)S
390.0	D	10	2.0	10	0028	0128	0228	0328	2028	3028	4028	T252D397K010(1)S
470.0	D	10	4.0	10	0029	0129	0229	0329	2029	3029	4029	T252D477K010(1)S
470.0	D	20	4.0	10	0030	0130	0230	0330	2030	3030	4030	T252D477M010(1)S
560.0	D	10	4.0	10	0031	0131	0231	0331	2031	3031	4031	T252D567K010(1)S
15 VOLT RATING AT 85°C												
4.7	A	10	.5	4	0032	0132	0232	0332	2032	3032	4032	T252A475K015(1)S
4.7	A	20	.5	4	0033	0133	0233	0333	2033	3033	4033	T252A475M015(1)S
5.6	A	10	.5	4	0034	0134	0234	0334	2034	3034	4034	T252A565K015(1)S
33.0	B	10	1.0	6	0035	0135	0235	0335	2035	3035	4035	T252B336K015(1)S
33.0	B	20	1.0	6	0036	0136	0236	0336	2036	3036	4036	T252B336M015(1)S
39.0	B	10	1.0	6	0037	0137	0237	0337	2037	3037	4037	T252B396K015(1)S
150.0	C	10	1.0	8	0038	0138	0238	0338	2038	3038	4038	T252C157K015(1)S
150.0	C	20	1.0	8	0039	0139	0239	0339	2039	3039	4039	T252C157M015(1)S
180.0	C	10	2.0	8	0040	0140	0240	0340	2040	3040	4040	T252C187K015(1)S
220.0	D	10	2.0	8	0041	0141	0241	0341	2041	3041	4041	T252D227K015(1)S
220.0	D	20	2.0	8	0042	0142	0242	0342	2042	3042	4042	T252D227M015(1)S
270.0	D	10	2.0	8	0043	0143	0243	0343	2043	3043	4043	T252D277K015(1)S
330.0	D	10	2.0	8	0044	0144	0244	0344	2044	3044	4044	T252D337K015(1)S
330.0	D	20	2.0	8	0045	0145	0245	0345	2045	3045	4045	T252D337M015(1)S

(1) To complete Part Number, insert Failure Rate Symbol in the 13th Character as shown on Page 31.

RATINGS & PART NUMBER REFERENCE

CAPACITANCE µF	CASE SIZE	CAPACITANCE TOLERANCE ±%	KEMET T252 SERIES						MIL-PRF-39003 (CSR33) CAPACITORS			
			D.C. LEAKAGE µA@25°C MAX.	MAX. DISSI-PATION FACTOR %@25°C, 120Hz	DASH NUMBER REFERENCE FAILURE RATE LEVEL (%/1000 HRS.) MIL-PRF-39003/6C EXPONENTIAL				MIL-PRF-39003/6C GRADED			KEMET EQUIVALENT MILITARY PART NUMBER
					M (1.0)	P (0.1)	R (0.01)	S (0.001)	B (0.1)	C (0.01)	D (0.001)	
20 VOLT RATING AT 85°C												
2.7	A	10	.5	4	0046	0146	0246	0346	2046	3046	4046	T252A275K020(1)S
3.3	A	10	.5	4	0047	0147	0247	0347	2047	3047	4047	T252A335K020(1)S
3.3	A	20	.5	4	0048	0148	0248	0348	2048	3048	4048	T252A335M020(1)S
3.9	A	10	.5	4	0049	0149	0249	0349	2049	3049	4049	T252A395K020(1)S
18.0	B	10	1.0	6	0050	0150	0250	0350	2050	3050	4050	T252B186K020(1)S
22.0	B	10	1.0	6	0051	0151	0251	0351	2051	3051	4051	T252B226K020(1)S
22.0	B	20	1.0	6	0052	0152	0252	0352	2052	3052	4052	T252B226M020(1)S
27.0	B	10	1.0	6	0053	0153	0253	0353	2053	3053	4053	T252B276K020(1)S
56.0	C	10	1.0	6	0054	0154	0254	0354	2054	3054	4054	T252C566K020(1)S
68.0	C	10	1.0	6	0055	0155	0255	0355	2055	3055	4055	T252C686K020(1)S
68.0	C	20	1.0	6	0056	0156	0256	0356	2056	3056	4056	T252C686M020(1)S
82.0	C	10	1.0	6	0057	0157	0257	0357	2057	3057	4057	T252C826K020(1)S
100.0	C	10	1.0	6	0058	0158	0258	0358	2058	3058	4058	T252C107K020(1)S
100.0	C	20	1.0	6	0059	0159	0259	0359	2059	3059	4059	T252C107M020(1)S
120.0	C	10	1.0	6	0060	0160	0260	0360	2060	3060	4060	T252C127K020(1)S
150.0	D	10	2.0	8	0061	0161	0261	0361	2061	3061	4061	T252D157K020(1)S
150.0	D	20	2.0	8	0062	0162	0262	0362	2062	3062	4062	T252D157M020(1)S
180.0	D	10	2.0	8	0063	0163	0263	0363	2063	3063	4063	T252D187K020(1)S
35 VOLT RATING AT 85°C												
1.8	A	10	.5	4	0064	0164	0264	0364	2064	3064	4064	T252A185K035(1)S
8.2	B	10	1.0	6	0065	0165	0265	0365	2065	3065	4065	T252B825K035(1)S
10.0	B	10	1.0	6	0066	0166	0266	0366	2066	3066	4066	T252B106K035(1)S
10.0	B	20	1.0	6	0067	0167	0267	0367	2067	3067	4067	T252B106M035(1)S
33.0	C	10	1.0	6	0068	0168	0268	0368	2068	3068	4068	T252C336K035(1)S
33.0	C	20	1.0	6	0069	0169	0269	0369	2069	3069	4069	T252C336M035(1)S
39.0	C	10	1.0	6	0070	0170	0270	0370	2070	3070	4070	T252C396K035(1)S
47.0	C	10	1.0	6	0071	0171	0271	0371	2071	3071	4071	T252C476K035(1)S
47.0	C	20	1.0	6	0072	0172	0272	0372	2072	3072	4072	T252C476M035(1)S
56.0	D	10	2.0	6	0073	0173	0273	0373	2073	3073	4073	T252D566K035(1)S
68.0	D	10	2.0	6	0074	0174	0274	0374	2074	3074	4074	T252D686K035(1)S
68.0	D	20	2.0	6	0075	0175	0275	0375	2075	3075	4075	T252D686M035(1)S
50 VOLT RATING AT 85°C												
1.2	A	10	.5	4	0076	0176	0276	0376	2076	3076	4076	T252A125K050(1)S
1.5	A	10	.5	4	0077	0177	0277	0377	2077	3077	4077	T252A155K050(1)S
1.5	A	20	.5	4	0078	0178	0278	0378	2078	3078	4078	T252A155M050(1)S
5.6	B	10	1.0	4	0079	0179	0279	0379	2079	3079	4079	T252B565K050(1)S
6.8	B	10	1.0	6	0080	0180	0280	0380	2080	3080	4080	T252B685K050(1)S
6.8	B	20	1.0	6	0081	0181	0281	0381	2081	3081	4081	T252B685M050(1)S
22.0	C	10	1.0	6	0082	0182	0282	0382	2082	3082	4082	T252C226K050(1)S
22.0	C	20	1.0	6	0083	0183	0283	0383	2083	3083	4083	T252C226M050(1)S
27.0	C	10	1.0	6	0084	0184	0284	0384	2084	3084	4084	T252C276K050(1)S
33.0	D	10	1.0	6	0085	0185	0285	0385	2085	*	*	T252D336K050(1)S
33.0	D	20	1.0	6	0086	0186	0286	0386	2086	*	*	T252D336M050(1)S
39.0	D	10	1.0	6	0087	0187	0287	0387	2087	*	*	T252D396K050(1)S

(1) To complete Part Number, insert Failure Rate Symbol in the 13th Character as shown on Page 31.
*NOTE: C Failure rate not QPL for -3085 thru 3087.
D Failure rate not QPL for -4085 thru 4087.

TANTALUM HERMETICALLY SEALED / AXIAL — MIL-PRF-39003

T262 (CSR21) SERIES

KEMET's T262 (CSR21) per MIL-C-39003/09 hermetically sealed solid tantalum capacitors are similar to KEMET's popular T212 (CSR13 per MIL-PRF-39003/01) capacitors shown on page 6, but offer higher ripple current handling capability and exhibit exceptionally low Equivalent Series Resistance (ESR).

The T262 Series is ideal for filtering applications and in military power supplies where low ESR is essential. T262s are 100% surge current tested and their dissipation factor is screened at 1kHz. Available in C & D case sizes only, 5.6 to 330 µF, 6 to 50 VDC.

CAPACITOR OUTLINE DRAWINGS

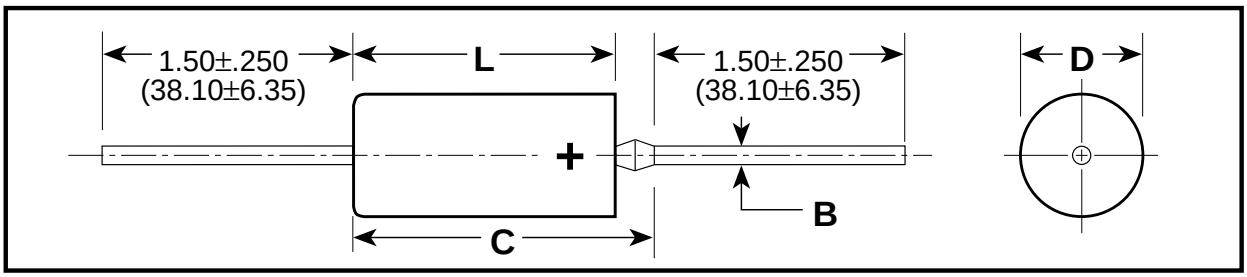

DIMENSIONS — INCHES & (MILLIMETERS)

CASE SIZE	UNINSULATED D ±0.005 (±.13)	UNINSULATED L ±0.031 (±.79)	INSULATED D ±0.010 (±.25)	INSULATED L ±0.031 (±.79)	B ±0.002 (±.05)	C MAX.
C	0.279 (7.09)	0.650 (16.51)	0.289 (7.34)	0.686 (17.42)	0.025 (.64)	0.822 (20.88)
D	0.341 (8.66)	0.750 (19.05)	0.351 (8.92)	0.786 (19.96)	0.025 (.64)	0.922 (23.42)

ORDERING INFORMATION

T 262 C 106 K 050 C S*

TANTALUM

SERIES
T262 — (CSR21)

CASE SIZE
C / D

PICOFARAD CODE
First two digits represent significant figures.
3rd digit specifies no. of zeros to follow.

CAP. TOLERANCE
M — ±20%
K — ±10%
J — ±5%

LEAD MATERIAL
S — Standard (Solder-coated nickel)

FAILURE RATE

GRADED	EXPONENTIAL
B — 0.1%/k hrs.	M — 1%/k hrs.
C — 0.01%/k hrs.	P — 0.1%/k hrs.
D — 0.001%/k hrs.	R — 0.01%/k hrs.
	S — 0.001%/k hrs.

VOLTAGE RATING
At 85°C

***Part Number Example: T262C106K050CS (14 digits – no spaces)**

For Military Marking Information, see page 4.

KEMET Electronics Corporation, P.O. Box 5928, Greenville, S.C. 29606 (864) 963-6300

RATINGS & PART NUMBER REFERENCE

CAPACITANCE µF	CASE SIZE	CAPACITANCE TOLERANCE ±%	KEMET T262 SERIES: D.C. LEAKAGE µA@25°C MAX.	MAX. DISSIPATION FACTOR %@25°C, 1 kHz	MAX. ESR Ω@25°C, 100 kHz	MAX. RIPPLE CURRENT Arms@25°C 40 kHz	MIL-PRF-39003/09 (CSR21) CAPACITORS — DASH NUMBER REFERENCE FAILURE RATE LEVEL (%/1000 HRS.): MIL-PRF-39003/9D EXPONENTIAL: M (1.0)	P (0.1)	R (0.01)	S (0.001)	MIL-PRF-39003/9D GRADED: B (0.1)	C (0.01)	D (0.001)	KEMET EQUIVALENT MILITARY PART NUMBER
6 VOLT RATING AT 85°C — 4 VOLT RATING AT 125°C														
150.0	C	5	4.5	10	.065	3.3	0001	0101	0201	0301	2001	3001	4001	T262C157J006(1)S
150.0	C	10	4.5	10	.065	3.3	0002	0102	0202	0302	2002	3002	4002	T262C157K006(1)S
150.0	C	20	4.5	10	.065	3.3	0003	0103	0203	0303	2003	3003	4003	T262C157M006(1)S
180.0	C	5	5.5	10	.060	3.4	0004	0104	0204	0304	2004	3004	4004	T262C187J006(1)S
180.0	C	10	5.5	10	.060	3.4	0005	0105	0205	0305	2005	3005	4005	T262C187K006(1)S
270.0	D	5	6.5	10	.050	4.1	0006	0106	0206	0306	2006	3006	4006	T262D277J006(1)S
270.0	D	10	6.5	10	.050	4.1	0007	0107	0207	0307	2007	3007	4007	T262D277K006(1)S
330.0	D	5	7.5	12	.045	4.3	0008	0108	0208	0308	2008	3008	4008	T262D337J006(1)S
330.0	D	10	7.5	12	.045	4.3	0009	0109	0209	0309	2009	3009	4009	T262D337K006(1)S
330.0	D	20	7.5	12	.045	4.3	0010	0110	0210	0310	2010	3010	4010	T262D337M006(1)S
10 VOLT RATING AT 85°C — 7 VOLT RATING AT 125°C														
82.0	C	5	4.0	8	.085	2.9	0011	0111	0211	0311	2011	3011	4011	T262C826J010(1)S
82.0	C	10	4.0	8	.085	2.9	0012	0112	0212	0312	2012	3012	4012	T262C826K010(1)S
100.0	C	5	5.0	8	.075	3.0	0013	0113	0213	0313	2013	3013	4013	T262C107J010(1)S
100.0	C	10	5.0	8	.075	3.0	0014	0114	0214	0314	2014	3014	4014	T262C107K010(1)S
100.0	C	20	5.0	8	.075	3.0	0015	0115	0215	0315	2015	3015	4015	T262C107M010(1)S
120.0	C	5	6.0	8	.070	3.2	0016	0116	0216	0316	2016	3016	4016	T262C127J010(1)S
120.0	C	10	6.0	8	.070	3.2	0017	0117	0217	0317	2017	3017	4017	T262C127K010(1)S
180.0	D	5	9.0	8	.060	3.7	0018	0118	0218	0318	2018	3018	4018	T262D187J010(1)S
180.0	D	10	9.0	8	.060	3.7	0019	0119	0219	0319	2019	3019	4019	T262D187K010(1)S
220.0	D	5	10.0	10	.055	3.9	0020	0120	0220	0320	2020	3020	4020	T262D227J010(1)S
220.0	D	10	10.0	10	.055	3.9	0021	0121	0221	0321	2021	3021	4021	T262D227K010(1)S
220.0	D	20	10.0	10	.055	3.9	0022	0122	0222	0322	2022	3022	4022	T262D227M010(1)S
15 VOLT RATING AT 85°C — 10 VOLT RATING AT 125°C														
56.0	C	5	4.0	6	.100	2.6	0023	0123	0223	0323	2023	3023	4023	T262C566J015(1)S
56.0	C	10	4.0	6	.100	2.6	0024	0124	0224	0324	2024	3024	4024	T262C566K015(1)S
68.0	C	5	5.0	6	.095	2.7	0025	0125	0225	0325	2025	3025	4025	T262C686J015(1)S
68.0	C	10	5.0	6	.095	2.7	0026	0126	0226	0326	2026	3026	4026	T262C686K015(1)S
68.0	C	20	5.0	6	.095	2.7	0027	0127	0227	0327	2027	3027	4027	T262C686M015(1)S
120.0	D	5	9.0	8	.070	3.5	0028	0128	0228	0328	2028	3028	4028	T262D127J015(1)S
120.0	D	10	9.0	8	.070	3.5	0029	0129	0229	0329	2029	3029	4029	T262D127K015(1)S
150.0	D	5	10.0	8	.065	3.6	0030	0130	0230	0330	2030	3030	4030	T262D157J015(1)S
150.0	D	10	10.0	8	.065	3.6	0031	0131	0231	0331	2031	3031	4031	T262D157K015(1)S
150.0	D	20	10.0	8	.065	3.6	0032	0132	0232	0332	2032	3032	4032	T262D157M015(1)S
20 VOLT RATING AT 85°C — 13 VOLT RATING AT 125°C														
27.0	C	5	2.5	5	.145	2.2	0033	0133	0233	0333	2033	3033	4033	T262C276J020(1)S
27.0	C	10	2.5	5	.145	2.2	0034	0134	0234	0334	2034	3034	4034	T262C276K020(1)S
33.0	C	5	3.5	5	.130	2.3	0035	0135	0235	0335	2035	3035	4035	T262C336J020(1)S
33.0	C	10	3.5	5	.130	2.3	0036	0136	0236	0336	2036	3036	4036	T262C336K020(1)S
33.0	C	20	3.5	5	.130	2.3	0037	0137	0237	0337	2037	3037	4037	T262C336M020(1)S
39.0	C	5	4.0	5	.120	2.4	0038	0138	0238	0338	2038	3038	4038	T262C396J020(1)S
39.0	C	10	4.0	5	.120	2.4	0039	0139	0239	0339	2039	3039	4039	T262C396K020(1)S
47.0	C	5	4.5	6	.110	2.5	0040	0140	0240	0340	2040	3040	4040	T262C476J020(1)S
47.0	C	10	4.5	6	.110	2.5	0041	0141	0241	0341	2041	3041	4041	T262C476K020(1)S
47.0	C	20	4.5	6	.110	2.5	0042	0142	0242	0342	2042	3042	4042	T262C476M020(1)S
56.0	D	5	5.5	6	.100	2.9	0043	0143	0243	0343	2043	3043	4043	T262D566J020(1)S
56.0	D	10	5.5	6	.100	2.9	0044	0144	0244	0344	2044	3044	4044	T262D566K020(1)S
68.0	D	5	7.0	6	.095	3.0	0045	0145	0245	0345	2045	3045	4045	T262D686J020(1)S
68.0	D	10	7.0	6	.095	3.0	0046	0146	0246	0346	2046	3046	4046	T262D686K020(1)S
68.0	D	20	7.0	6	.095	3.0	0047	0147	0247	0347	2047	3047	4047	T262D686M020(1)S
82.0	D	5	8.0	6	.085	3.1	0048	0148	0248	0348	2048	3048	4048	T262D826J020(1)S
82.0	D	10	8.0	6	.085	3.1	0049	0149	0249	0349	2049	3049	4049	T262D826K020(1)S
100.0	D	5	10.0	8	.075	3.3	0050	0150	0250	0350	2050	3050	4050	T262D107J020(1)S
100.0	D	10	10.0	8	.075	3.3	0051	0151	0251	0351	2051	3051	4051	T262D107K020(1)S
100.0	D	20	10.0	8	.075	3.3	0052	0152	0252	0352	2052	3052	4052	T262D107M020(1)S

(1) To complete the T262 Series Part Number, insert Failure Rate Symbol in the 13th Character as shown on Page 34.

RATINGS & PART NUMBER REFERENCE

CAPACITANCE µF	CASE SIZE	CAPACITANCE TOLERANCE ±%	KEMET T262 SERIES D.C. LEAKAGE µA@25°C MAX.	MAX. DISSI-PATION FACTOR %@25°C, 1 kHz	MAX. ESR Ω@25°C, 100 kHz	MAX. RIPPLE CURRENT Arms@25°C 40 kHz	MIL-PRF-39003/09 (CSR21) CAPACITORS — DASH NUMBER REFERENCE FAILURE RATE LEVEL (%/1000 HRS.) — MIL-PRF-39003/9D EXPONENTIAL M (1.0)	P (0.1)	R (0.01)	S (0.001)	MIL-PRF-39003/9D GRADED B (0.1)	C (0.01)	D (0.001)	KEMET EQUIVALENT MILITARY PART NUMBER
35 VOLT RATING AT 85°C — 23 VOLT RATING AT 125°C														
22.0	C	5	4.0	4	.160	2.1	0053	0153	0253	0353	2053	3053	4053	T262C226J035(1)S
22.0	C	10	4.0	4	.160	2.1	0054	0154	0254	0354	2054	3054	4054	T262C226K035(1)S
22.0	C	20	4.0	4	.160	2.1	0055	0155	0255	0355	2055	3055	4055	T262C226M035(1)S
27.0	D	5	4.5	4	.145	2.4	0056	0156	0256	0356	2056	3056	4056	T262D276J035(1)S
27.0	D	10	4.5	4	.145	2.4	0057	0157	0257	0357	2057	3057	4057	T262D276K035(1)S
33.0	D	5	5.5	5	.130	2.5	0058	0158	0258	0358	2058	3058	4058	T262D336J035(1)S
33.0	D	10	5.5	5	.130	2.5	0059	0159	0259	0359	2059	3059	4059	T262D336K035(1)S
33.0	D	20	5.5	5	.130	2.5	0060	0160	0260	0360	2060	3060	4060	T262D336M035(1)S
39.0	D	5	7.0	5	.120	2.6	0061	0161	0261	0361	2061	3061	4061	T262D396J035(1)S
39.0	D	10	7.0	5	.120	2.6	0062	0162	0262	0362	2062	3062	4062	T262D396K035(1)S
47.0	D	5	8.0	5	.110	2.7	0063	0163	0263	0363	2063	3063	4063	T262D476J035(1)S
47.0	D	10	8.0	5	.110	2.7	0064	0164	0264	0364	2064	3064	4064	T262D476K035(1)S
47.0	D	20	8.0	5	.110	2.7	0065	0165	0265	0365	2065	3065	4065	T262D476M035(1)S
50 VOLT RATING AT 85°C — 33 VOLT RATING AT 125°C														
5.6	C	5	2.2	3	.300	1.5	0066	0166	0266	0366	2066	3066	4066	T262C565J050(1)S
5.6	C	10	2.2	3	.300	1.5	0067	0167	0267	0367	2067	3067	4067	T262C565K050(1)S
6.8	C	5	2.2	3	.275	1.6	0068	0168	0268	0368	2068	3068	4068	T262C685J050(1)S
6.8	C	10	2.2	3	.275	1.6	0069	0169	0269	0369	2069	3069	4069	T262C685K050(1)S
6.8	C	20	2.2	3	.275	1.6	0070	0170	0270	0370	2070	3070	4070	T262C685M050(1)S
8.2	C	5	2.5	3	.250	1.6	0071	0171	0271	0371	2071	3071	4071	T262C825J050(1)S
8.2	C	10	2.5	3	.250	1.6	0072	0172	0272	0372	2072	3072	4072	T262C825K050(1)S
10.0	C	5	2.5	3	.230	1.7	0073	0173	0273	0373	2073	3073	4073	T262C106J050(1)S
10.0	C	10	2.5	3	.230	1.7	0074	0174	0274	0374	2074	3074	4074	T262C106K050(1)S
10.0	C	20	2.5	3	.230	1.7	0075	0175	0275	0375	2075	3075	4075	T262C106M050(1)S
12.0	C	5	3.0	3	.210	1.8	0076	0176	0276	0376	2076	3076	4076	T262C126J050(1)S
12.0	C	10	3.0	3	.210	1.8	0077	0177	0277	0377	2077	3077	4077	T262C126K050(1)S
15.0	C	5	4.0	3	.190	1.9	0078	0178	0278	0378	2078	3078	4078	T262C156J050(1)S
15.0	C	10	4.0	3	.190	1.9	0079	0179	0279	0379	2079	3079	4079	T262C156K050(1)S
15.0	C	20	4.0	3	.190	1.9	0080	0180	0280	0380	2080	3080	4080	T262C156M050(1)S
18.0	C	5	4.5	4	.175	2.0	0081	0181	0281	0381	2081	3081	4081	T262C186J050(1)S
18.0	C	10	4.5	4	.175	2.0	0082	0182	0282	0382	2082	3082	4082	T262C186K050(1)S
22.0	D	5	5.5	4	.160	2.3	0083	0183	0283	0383	2083	3083	4083	T262D226J050(1)S
22.0	D	10	5.5	4	.160	2.3	0084	0184	0284	0384	2084	3084	4084	T262D226K050(1)S
22.0	D	20	5.5	4	.160	2.3	0085	0185	0285	0385	2085	3085	4085	T262D226M050(1)S

(1) To complete the T262 Series Part Number, insert Failure Rate Symbol in the 13th Character as shown on Page 34.

T216 and T256 are KEMET's new designation for MIL-Style CSS13 and CSS33 capacitors. The T216/T256 Series is qualified to all failure rates per MIL-PRF-39003/10. Products meeting this specification have passed rigorous test requirements and are used in space applications or other equally demanding environments.

These capacitors provide circuit designers an excellent choice for blocking, bypass, decoupling, filtering and timing applications.

The T216 is available in capacitance ratings from .15 µF to 330 µF; voltage ratings from 6 VDC to 75 VDC. The T256 is available in capacitance ratings from 1.2 µF to 1000 µF with voltage ratings of 6 VDC to 50 VDC.

CAPACITOR OUTLINE DRAWINGS

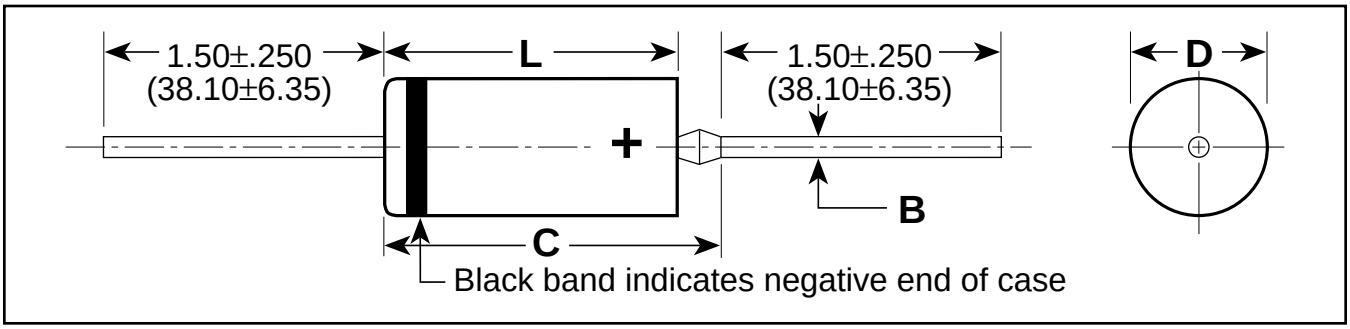

DIMENSIONS — INCHES & (MILLIMETERS)

CASE SIZE	UNINSULATED D ±0.005 (±.13)	UNINSULATED L ±0.031 (±.79)	INSULATED D ±0.010 (±.25)	INSULATED L ±0.031 (±.79)	B ±0.002 (±.05)	C MAX.
A	0.125 (3.18)	0.250 (6.35)	0.135 (3.43)	0.286 (7.26)	0.020 (.51)	0.422 (10.72)
B	0.175 (4.45)	0.438 (11.13)	0.185 (4.70)	0.474 (12.04)	0.020 (.51)	0.610 (15.49)
C	0.279 (7.09)	0.650 (16.51)	0.289 (7.34)	0.686 (17.42)	0.025 (.64)	0.822 (20.88)
D	0.341 (8.66)	0.750 (19.05)	0.351 (8.92)	0.786 (19.96)	0.025 (.64)	0.922 (23.42)

ORDERING INFORMATION

T 2XX A 105 K 050 C S*

TANTALUM — T

SERIES — 2XX
216 — MIL-C-39003/10-CSS13
256 — MIL-C-39003/10-CSS33

CASE SIZE — A
A / B / C / D

PICOFARAD CODE — 105
First two digits represent significant figures.
3rd digit specifies no. of zeros to follow.

CAP. TOLERANCE — K
K — ±10%

VOLTAGE RATING — 050
At 85°C

FAILURE RATE GRADED — C
B — 0.1%/k hrs.
C — 0.01%/k hrs.

LEAD MATERIAL — S*
S — Standard (Solder-coated nickel)

***Part Number Example: T216A105K050CS (14 digits – no spaces)**

MIL-PRF-39003/10 ORDERING INFORMATION

M39003/10 — 3078S

Military Specification Document Number

Slash Sheet Number

S — designates sleeved
U — designates unsleeved

MIL dash number signifies capacitance, voltage and failure rate (see ratings and part number tables).

MARKING INFORMATION

A CASE

39003	Military specification number
10 - K	Specification sheet number and trademark
3078S	Military dash number and "S" for sleeved
+J310	Polarity, "J" for JAN date code (1st digit indicates year and the next two digits indicate the week
XYA	Lot, unique lot code

C & D CASE

M39003	Military specification number
10-2049SJ	Specification sheet number, military dash number and "J" for Jan.
+6.8 µF	Positive terminal identifier and capacitance value
10% 35V	Capacitance tolerance and voltage rating
31433	Source code
0310 NAB K	Date code, lot code, unique lot code, and trademark

B CASE

M39003	Military specification number
10 -	Specification sheet number
3082SJ	Military dash number and "J" for JAN
31433	Source code
+310	Polarity, date code (1st digit indicates year and the next two digits indicate the week
NABK	Lot code, unique lot code and trademark.

NOTE: Marking will include S or U after the MIL dash number, a third letter following lot symbol or lot code designates a unique lot identifier, and a black band on negative end of case.

▌ Black band on negative end.

T216/(CSS13) RATINGS & PART NUMBER REFERENCE

CAPACITANCE µF	CASE SIZE	KEMET EQUIVALENT PART NUMBER FOR CSS13 CAPACITORS	KEMET T216 DC LEAKAGE µA @ +25° MAX.	µA @ +85° MAX.	µA @ +125° MAX.	MAX. DISSIPATION FACTOR % @ -55°C +25°C MAX.	% @ -85°C +125°C MAX.	MAX. ESR Ω @ 25°C 100kHz	MIL-PRF-39003 (CSS13) CAPACITORS DASH NUMBER REFERENCE FAILURE RATE LEVEL (%/1000 HRS) MIL-PRF-39003/10 GRADED B (0.1)	C (0.01)
6 VOLT RATING AT 85°C										
5.6	A	T216A565K006CS	.3	6.0	7.5	4	4	.90		3001(1)
6.8	A	T216A685K006CS	.3	6.0	7..5	6	6	.80		3002(1)
47.0	B	T216B476K006CS	1.5	24.0	30.0	6	6	.24		3003(1)
56.0	B	T216B566K006CS	1.5	24.0	30.0	6	6	.24		3004(1)
150.0	C	T216C157K006CS	4.5	90.0	113.0	8	8	.09		3005(1)
180.0	C	T216C187K006CS	5.5	110.0	138.0	8	8	.08		3006(1)
270.0	D	T216D277K006CS	6.5	130.0	163.0	8	8	.07		3007(1)
330.0	D	T216D337K006CS	7.5	150.0	188.0	8	8	.06		3008(1)
10 VOLT RATING AT 85°C										
3.9	A	T216A395K010CS	.3	6.0	7.5	4	4	1.00		3009(1)
4.7	A	T216A475K010CS	.4	7.0	8.8	4	4	.90		3010(1)
27.0	B	T216B276K010CS	2.0	40.0	50.0	6	6	.25		3011(1)
33.0	B	T216B336K010CS	2.5	50.0	63.0	6	6	.24		3012(1)
39.0	B	T216B396K010CS	2.5	50.0	63.0	6	6	.24		3013(1)
82.0	C	T216C826K010CS	4.0	80.0	100.0	6	6	.12		3014(1)
100.0	C	T216C107K010CS	5.0	100.0	125.0	8	8	.11		3015(1)
120.0	C	T216C127K010CS	6.0	120.0	150.0	8	8	.10		3016(1)
180.0	D	T216D187K010CS	9.0	180.0	226.0	8	8	.08		3017(1)
220.0	D	T216D227K010CS	10.0	200.0	250.0	8	8	.07		3018(1)

(1) To complete, insert S for sleeved or U for unsleeved, **if "U" ordered also use C-0100**.

RATINGS & PART NUMBER REFERENCE T216/(CSS13) (Cont'd)

CAPACITANCE µF	CASE SIZE	KEMET EQUIVALENT PART NUMBER FOR CSS13 CAPACITORS	KEMET T216 DC LEAKAGE µA @ +25° MAX.	DC LEAKAGE µA @ +85° MAX.	DC LEAKAGE µA @ +125° MAX.	MAX. DISSIPATION FACTOR % @ -55°C +25°C MAX.	MAX. DISSIPATION FACTOR % @ -85°C +125°C MAX.	MAX. ESR Ω @ 25°C 100kHz	MIL-PRF-39003 (CSS13) CAPACITORS DASH NUMBER REFERENCE FAILURE RATE LEVEL (%/1000 HRS) MIL-PRF-39003/10 GRADED B (0.1)	C (0.01)
15 VOLT RATING AT 85°C										
2.7	A	T216A275K015CS	.3	6.0	7.5	4	4	1.20		3019(1)
3.3	A	T216A335K015CS	.4	8.0	10.0	4	4	1.00		3020(1)
18.0	B	T216B186K015CS	2.0	35.0	44.0	6	6	.27		3021(1)
22.0	B	T216B226K015CS	2.0	40.0	50.0	6	6	.26		3022(1)
56.0	C	T216C566K015CS	4.0	80.0	100.0	6	6	.15		3023(1)
68.0	C	T216C686K015CS	5.0	100.0	125.0	6	6	.13		3024(1)
120.0	D	T216D127K015CS	9.0	180.0	226.0	8	8	.09		3025(1)
150.0	D	T216D157K015CS	10.0	220.0	250.0	8	8	.09		3026(1)
20 VOLT RATING AT 85°C										
1.2	A	T216A125K020CS	.3	6.0	7.5	4	4	1.40		3027(1)
1.5	A	T216A155K020CS	.3	6.0	7.5	4	4	1.30		3028(1)
1.8	A	T216A185K020CS	.3	6.0	7.5	4	4	1.25		3029(1)
2.2	A	T216A225K020CS	.4	8.0	10.0	4	4	1.20		3030(1)
8.2	B	T216B825K020CS	1.0	20.0	25.0	6	6	.39		3031(1)
10.0	B	T216B106K020CS	1.5	30.0	38.0	6	6	.35		3032(1)
12.0	B	T216B126K020CS	1.8	35.0	44.0	6	6	.32		3033(1)
15.0	B	T216B156K020CS	2.0	40.0	50.0	6	6	.29		3034(1)
27.0	C	T216C276K020CS	2.5	50.0	63.0	6	6	.21		3035(1)
33.0	C	T216C336K020CS	3.5	70.0	88.0	6	6	.19		3036(1)
39.0	C	T216C396K020CS	4.0	80.0	100.0	6	6	.17		3037(1)
47.0	C	T216C476K020CS	4.5	90.0	113.0	6	6	.16		3038(1)
56.0	D	T216D566K020BS	5.5	110.0	138.0	6	6	.13	2039(1)	
68.0	D	T216D686K020BS	7.0	140.0	175.0	6	6	.12	2040(1)	
82.0	D	T216D826K020BS	8.0	160.0	200.0	6	6	.11	2041(1)	
100.0	D	T216D107K020BS	10.0	200.0	250.0	8	8	.10	2042(1)	
35 VOLT RATING AT 85°C										
5.6	B	T216B565K035BS	1.3	25.0	32.0	4	4	.47	2043(1)	
6.8	B	T216B685K035BS	1.5	30.0	38.0	6	6	.43	2044(1)	
22.0	C	T216C226K035BS	4.0	40.0	100.0	6	6	.25	2045(1)	
27.0	D	T216D276K035BS	4.5	90.0	113.0	6	6	.18	2046(1)	
33.0	D	T216D336K035BS	5.5	110.0	138.0	6	6	.17	2047(1)	
39.0	D	T216D396K035BS	7.0	140.0	175.0	6	6	.15	2048(1)	
47.0	D	T216D476K035BS	8.0	160.0	200.0	6	6	.14	2049(1)	
50 VOLT RATING AT 85°C										
.12	A	T216A124K050CS	.3	5.0	6.3	2	4	6.50		3067(1)
.15	A	T216A154K050CS	.3	5.0	6.3	2	4	5.50		3068(1)
.18	A	T216A184K050CS	.3	5.0	6.3	2	4	5.00		3069(1)
.22	A	T216A224K050CS	.3	5.0	6.3	2	4	4.00		3070(1)
.27	A	T216A274K050CS	.3	5.0	6.3	2	4	3.50		3071(1)
.33	A	T216A334K050CS	.3	5.0	6.3	2	4	3.30		3072(1)
.39	A	T216A394K050CS	.3	5.0	6.3	2	4	3.20		3073(1)
.47	A	T216A474K050CS	.3	5.0	6.3	2	4	3.00		3074(1)
.56	A	T216A564K050CS	.3	5.0	6.3	2	4	2.50		3075(1)
.68	A	T216A684K050CS	.3	5.0	6.3	2	4	1.80		3076(1)
.82	A	T216A824K050CS	.3	5.0	6.3	2	4	1.60		3077(1)
1.0	A	T216A105K050CS	.4	8.0	10.0	2	4	1.40		3078(1)
1.2	B	T216B125K050CS	.4	9.0	11.0	4	4	1.20		3079(1)
1.5	B	T216B155K050CS	.6	12.0	15.0	4	4	1.10		3080(1)
1.8	B	T216B185K050CS	.7	14.0	18.0	4	4	.92		3081(1)
2.2	B	T216B225K050CS	.8	17.0	22.0	4	4	.80		3082(1)
2.7	B	T216B275K050CS	1.0	20.0	25.0	4	4	.68		3083(1)
3.3	B	T216B335K050CS	1.2	25.0	32.0	4	4	.62		3084(1)
3.9	B	T216B395K050CS	1.5	30.0	38.0	4	4	.56		3085(1)
4.7	B	T216B475K050BS	1.7	35.0	44.0	4	4	.51	2086(1)	
5.6	C	T216C565K050CS	2.2	45.0	56.0	4	4	.44		3087(1)
6.8	C	T216C685K050CS	2.2	45.0	56.0	6	6	.40		3088(1)
8.2	C	T216C825K050CS	2.5	50.0	63.0	6	6	.36		3089(1)
10.0	C	T216C106K050CS	2.5	50.0	63.0	6	6	.33		3090((1)
12.0	C	T216C126K050BS	3.0	60.0	75.0	6	6	.30	2091(1)	
15.0	C	T216C156K020BS	4.0	80.0	100.0	6	6	.27	2092(1)	
18.0	C	T216C186K050BS	4.5	90.0	113.0	6	6	.25	2093(1)	
22.0	D	T216D226K050BS	5.5	100.0	138.0	6	6	.20	2094(1)	

(1) To complete, insert S for sleeved or U for unsleeved, **if "U" ordered also use C-0100**.

RATINGS & PART NUMBER REFERENCE T216/(CSS13) (Cont'd)

CAPACITANCE µF	CASE SIZE	KEMET EQUIVALENT PART NUMBER FOR CSS13 CAPACITORS	KEMET T216 SERIES: DC LEAKAGE µA @ +25° MAX.	DC LEAKAGE µA @ +85° MAX.	DC LEAKAGE µA @ +125° MAX.	MAX. DISSIPATION FACTOR % @ -55°C +25°C MAX.	MAX. DISSIPATION FACTOR % @ -85°C +125°C MAX.	MAX. ESR Ω @ 25°C 100kHz	MIL-PRF-39003 (CSS13) CAPACITORS DASH NUMBER REFERENCE FAILURE RATE LEVEL (%/1000 HRS) MIL-PRF-39003/10 GRADED: B (0.1)	C (0.01)
75 VOLT RATING AT 85°C										
.15	A	T216A154K075CS	.3	5.0	6.3	2	4	4.4		3097(1)
.18	A	T216A184K075CS	.3	5.0	6.3	2	4	4.0		3098(1)
.22	A	T216A224K075CS	.3	5.0	6.3	2	4	3.5		3099(1)
.27	A	T216A274K075CS	.3	5.0	6.3	2	4	3.1		3100(1)
.33	A	T216A334K075CS	.3	5.0	6.3	2	4	2.8		3101(1)
.39	A	T216A394K075CS	.3	5.0	6.3	2	4	2.6		3102(1)
.47	A	T216A474K075CS	.3	5.0	6.3	2	4	2.4		3103(1)
.56	A	T216A564K075CS	.3	5.0	6.3	2	4	2.25		3104(1)
.68	A	T216A684K075CS	.3	5.0	6.3	2	4	2.10		3105(1)
.82	B	T216B824K075CS	.3	5.0	6.3	2	4	1.47		3106(1)
1.0	B	T216B105K075CS	.4	5.0	6.3	2	4	1.40		3107(1)
1.2	B	T216B125K075CS	.4	5.0	6.3	4	4	1.33		3108(1)
1.5	B	T216B155K075CS	.6	10.0	13.0	4	4	1.06		3109(1)
1.8	B	T216B185K075CS	.7	10.0	13.0	4	4	.92		3110(1)
2.2	B	T216B225K075CS	.8	15.0	19.0	4	4	.80		3111(1)
2.7	B	T216B275K075BS	1.0	15.0	19.0	4	4	.68	2112(1)	
3.3	B	T216B335K075BS	1.2	20.0	25.0	4	4	.62	2113(1)	
3.9	B	T216B395K075BS	1.5	20.0	25.0	4	4	.56	2114(1)	
4.7	C	T216C475K075BS	3.0	60.0	75.0	4	4	.47	2115(1)	
5.6	C	T216C565K075BS	3.0	60.0	75.0	4	4	.44	2116(1)	
6.8	C	T216C685K075BS	5.0	100.0	125.0	6	6	.44	2117(1)	
8.2	C	T216C825K075BS	5.0	100.0	125.0	6	6	.36	2118(1)	
10.0	C	T216C106K075BS	5.0	100.0	125.0	6	6	.33	2119(1)	
12.0	D	T216D126K075BS	5.0	100.0	125.0	6	6	.26	2120(1)	
15.0	D	T216D156K075BS	7.0	140.0	175.0	6	6	.23	2121(1)	

T256/(CSS33) RATINGS AND PART NUMBER REFERENCE

CAPACITANCE µF	CASE SIZE	KEMET EQUIVALENT PART NUMBER FOR CSS33 CAPACITORS	KEMET T256 SERIES: DC LEAKAGE µA @ +25° MAX.	DC LEAKAGE µA @ +85° MAX.	DC LEAKAGE µA @ +125° MAX.	MAX. DISSIPATION FACTOR % @ -55°C +25°C MAX.	MAX. DISSIPATION FACTOR % @ -85°C +125°C MAX.	MAX. ESR Ω @ 25°C 100kHz	MIL-PRF-39003 (CSS33) CAPACITORS DASH NUMBER REFERENCE FAILURE RATE LEVEL (%/1000 HRS) MIL-PRF-39003/10 GRADED: B (0.1)	C (0.01)
6 VOLT RATING AT 85°C										
10.0	A	T256A106K006CS	.5	2.0	2.0	6	6	.70		3500(1)
12.0	A	T256A126K006CS	.5	2.0	2.0	6	6	.60		3501(1)
100.0	B	T256B107K006CS	1.0	3.0	3.0	8	8	.20		3502(1)
330.0	C	T256C337K006BS	2.0	8.0	8.0	8	8	.065	2503(1)	
390.0	C	T256C397K006BS	2.0	8.0	8.0	10	10	.065	2504(1)	
470.0	C	T256C477K006BS	2.0	8.0	8.0	10	10	.060	2505(1)	
680.0	D	T256D687K006CS	5.0	10.0	10.0	10	10	.060		3506(1)
820.0	D	T256D827K006CS	5.0	10.0	10.0	10	10	.055		3507(1)
1000.0	D	T256D108K006CS	5.0	10.0	10.0	10	10	.050		3508(1)
10 VOLT RATING AT 85°C										
6.8	A	T256A685K010CS	.5	2.0	2.0	6	6	.80		3509(1)
8.2	A	T256A825K010CS	.5	2.0	2.0	6	6	.70		3510(1)
47.0	B	T256B476K010CS	1.0	2.0	2.0	6	6	.22		3511(1)
56.0	B	T256B566K010CS	1.0	4.0	4.0	6	6	.20		3512(1)
68.0	B	T256B686K010CS	1.0	4.0	4.0	6	6	.18		3513(1)
82.0	B	T256B826K010CS	1.0	4.0	4.0	6	6	.15		3514(1)
220.0	C	T256C227K010BS	1.0	7.0	7.0	8	8	.090	2515(1)	
270.0	C	T256C277K010BS	2.0	10.0	10.0	8	8	.075	2516(1)	
390.0	D	T256D397K010CS	2.0	16.0	16.0	10	10	.070		3517(1)
470.0	D	T256D477K010CS	4.0	16.0	16.0	10	10	.065		3518(1)
560.0	D	T256D567K010CS	4.0	16.0	16.0	10	10	.060		3519(1)

(1) To complete, insert S for sleeved or U for unsleeved, **if "U" ordered also use C-0100**.

RATINGS AND PART NUMBER REFERENCE T256/(CSS33) (Cont'd)

CAPACITANCE µF	KEMET T256 SERIES								MIL-PRF-39003 (CSS33) CAPACITORS	
	CASE SIZE	KEMET EQUIVALENT PART NUMBER FOR CSS33 CAPACITORS	DC LEAKAGE			MAX. DISSIPATION FACTOR		MAX. ESR Ω @ 25°C 100kHz	DASH NUMBER REFERENCE FAILURE RATE LEVEL (%/1000 HRS) MIL-PRF-39003/10 GRADED	
			µA @ +25° MAX.	µA @ +85° MAX.	µA @ +125° MAX.	% @ -55°C +25°C MAX.	% @ -85°C +125°C MAX.		B (0.1)	C (0.01)
15 VOLT RATING AT 85°C										
4.7	A	T256A475K015CS	.5	2.0	2.0	4	4	.90		3520(1)
5.6	A	T256A565K015CS	.5	2.0	2.0	4	4	.80		3521(1)
33.0	B	T256B336K015CS	1.0	2.0	2.0	6	6	.24		3522(1)
39.0	B	T256B396K015CS	1.0	2.0	2.0	6	6	.22		3523(1)
150.0	C	T256C157K015BS	1.0	7.0	7.0	8	8	.10	2524(1)	
180.0	C	T256C187K015BS	2.0	10.0	10.0	8	8	.09	2525(1)	
220.0	D	T256D227K015BS	2.0	10.0	10.0	8	8	.07	2526(1)	
270.0	D	T256D277K015BS	2.0	16.0	16.0	8	8	.065	2527(1)	
330.0	D	T256D337K015BS	2.0	16.0	16.0	8	8	.060	2528(1)	
20 VOLT RATING AT 85°C										
2.7	A	T256A275K020CS	.5	2.0	2.0	4	4	1.15		3529(1)
3.3	A	T256A335K020CS	.5	2.0	2.0	4	4	.95		3530(1)
3.9	A	T256A395K020CS	.5	2.0	2.0	4	4	.90		3531(1)
18.0	B	T256B186K020CS	1.0	2.0	2.0	6	6	.27		3532(1)
22.0	B	T256B226K020BS	1.0	2.0	2.0	6	6	.26	2533(1)	
27.0	B	T256B276K020BS	1.0	2.0	2.0	6	6	.24	2534(1)	
56.0	C	T256C566K020CS	1.0	10.0	10.0	6	6	.15		3535(1)
68.0	C	T256C686K020CS	1.0	10.0	10.0	6	6	.14		3536(1)
82.0	C	T256C826K020BS	1.0	10.0	10.0	6	6	.12	2537(1)	
100.0	C	T256C107K020BS	1.0	10.0	10.0	6	6	.10	2538(1)	
120.0	C	T256C127K020BS	1.0	10.0	10.0	6	6	.09	2539(1)	
150.0	D	T256D157K020BS	2.0	10.0	10.0	8	8	.08	2540(1)	
180.0	D	T256D187K020BS	2.0	10.0	10.0	8	8	.07	2541(1)	
35 VOLT RATING AT 85°C										
1.8	A	T256A185K035BS	.5	2.0	2.0	4	4	.20	2542(1)	
8.2	B	T256B825K035BS	1.0	2.0	2.0	6	6	.40	2543(1)	
10.0	B	T256B106K035BS	1.0	2.0	2.0	6	6	.35	2544(1)	
33.0	C	T256C336K035BS	1.0	5.0	5.0	6	6	.19	2545(1)	
39.0	C	T256C396K035BS	1.0	5.0	5.0	6	6	.17	2546(1)	
47.0	C	T256C476K035BS	1.0	5.0	5.0	6	6	.15	2547(1)	
56.0	D	T256D566K035BS	2.0	10.0	10.0	6	6	.13	2548(1)	
68.0	D	T256D686K035BS	2.0	10.0	10.0	6	6	.12	2549(1)	
50 VOLT RATING AT 85°C										
1.2	A	T256A125K050BS	.5	2.0	2.0	4	4	1.30	2550(1)	
1.5	A	T256A155K050BS	.5	2.0	2.0	4	4	1.20	2551(1)	
5.6	B	T256B565K050BS	1.0	2.0	2.0	4	4	.47	2552(1)	
6.8	B	T256B685K050BS	1.0	2.0	2.0	6	6	.43	2553(1)	
22.0	C	T256C226K050BS	1.0	5.0	5.0	6	6	.22	2554(1)	
27.0	C	T256C276K050BS	1.0	5.0	5.0	6	6	.20	2555(1)	
33.0	D	T256D336K050BS	1.0	9.0	9.0	6	6	.18	2556(1)	
39.0	D	T256D396K050BS	1.0	9.0	9.0	6	6	.16	2557(1)	

(1) To complete, insert S for sleeved or U for unsleeved, **if "U" ordered also use C-0100**.

The KEMET T322 AND T323 (CX01 & CX05) Series offers a complete line of extended range molded solid tantalum capacitors designed specifically for high speed automatic insertion applications. These capacitors offer an extremely high capacitance-to-volume ratio while still maintaining excellent performance characteristics.

Supplied in six axial lead tubular case sizes, these capacitors are ideally suited for use in printed wiring boards and all applications requiring a high degree of packaging density and can be supplied in bulk packaging or lead-taped on reels.

The T322/T323 Series dimensions and tight lead wire-to-body concentricity permit installation by the same automatic insertion equipment used for diodes and resistors. Available in working voltages of 2, 4, 6, 10, 15, 20, 25, 35, and 50 volts. Operating temperature range -55°C to +85°C at full rated voltage and with ⅔ 85°C rated voltage at 125°C.

The gold color epoxy utilized permits laser marking with outstanding permanency and legibility.

T323 Series capacitors are qualified under MIL-PRF-49137/1 & 5 as Military Style CX01 & CX05.

Typical applications include decoupling, blocking, bypassing and filtering in commercial computers, data processing, communications, and other electronic equipment. The low ESR/impedance at high frequencies offered by this capacitor is especially suitable for decoupling required by high speed computers.

PERFORMANCE CHARACTERISTICS

- CAPACITANCE/VOLTAGE RANGE: 0.1-330µF, 2-50 Volts.
- CAPACITANCE TOLERANCE: Available in standard EIA nominal values with ±20%, ±10% and ±5% tolerance.
- DISSIPATION FACTOR: Maximum DF limits are shown in corresponding series part number listings on pages 44-48. See Application Notes Section, page 76 for additional description.
- DC LEAKAGE CURRENT: Each corresponding part number table lists maximum leakage current for each capacitor on pages 44 through 48. See Application Notes Section, page 76 for additional description.
- RATED VOLTAGE; WORKING VOLTAGE; SURGE VOLTAGE; REVERSE VOLTAGE: See Application Notes Section, page 76 & 77 for description.
- AC RIPPLE VOLTAGE: Permissible AC ripple voltage is related to equivalent series resistance (ESR) and power dissipation capability. Maximum power dissipation for each case size is listed in Table below. For additional description see page 79.

Case Size	Power Dissipation (max.) @ 25°C (watts)
A	.060
B	.070
C	.080
D	.090
E	.100
F	.110

Maximum Power Dissipation Capability @ 25°C

- IMPEDANCE and ESR: See Application Notes Section, pages 77 & 78 for description. Reference ESR values are shown in adjoining column, this page.
- ENVIRONMENTAL CONSIDERATIONS:
  A. Shock Test: MIL-STD-202, Method 213.
  B. Thermal Shock, MIL-STD-202, Method 107.
  C. Moisture Resistance: MIL-STD-202, Method 106.
  D. Solderability: MIL-STD-202, Method 208.

T322 ESR (OHMS) at 100 kHz @ +25°C
(The ESR values provided below are for reference only. No warranty, as stated on page 3 and reincorporated here, is made as to the accuracy of these values for any particular T322 Series product.)

Cap. µF	6 Volt	10 Volt	15 Volt	20 Volt	25 Volt	35 Volt	50 Volt
0.10						26.0	26.0
0.12						26.0	26.0
0.15						21.0	21.0
0.18						21.0	21.0
0.22						17.0	17.0
0.27						17.0	17.0
0.33						15.0	15.0
0.39						15.0	15.0
0.47					16.0	13.0	13.0
0.56					14.0	13.0	13.0
0.68					12.0	10.0	10.0
0.82					12.0	10.0	10.0
1.00				10.0	10.0	8.0	8.0
1.20				10.0	10.0	8.0	8.0
1.50			10.0	9.0	8.0	6.0	5.0
1.80			10.0	9.0	8.0	6.0	5.0
2.20		13.0	8.0	7.0	6.0	5.0	3.5
2.70		13.0	8.0	7.0	6.0	5.0	3.5
3.30	13.0	10.0	6.0	5.5	5.0	4.0	3.0
3.90	13.0	10.0	6.0	5.5	5.0	4.0	3.0
4.70	10.0	8.0	5.0	4.5	4.0	3.0	2.5
5.60	10.0	8.0	5.0	4.5	4.0	3.0	2.5
6.80	8.0	6.0	4.0	3.6	3.1	2.5	2.0
8.20	8.0	6.0	4.0	3.6	3.1	2.5	2.0
10.0	6.0	5.0	3.2	2.9	2.5	2.0	1.6
12.0	6.0	5.0	3.2	2.9	2.5	2.0	1.6
15.0	5.0	3.7	2.5	2.3	2.0	1.6	1.2
18.0	5.0	3.7	2.5	2.3	2.0	1.6	1.2
22.0	3.7	2.7	2.0	1.8	1.5	1.3	1.0
27.0	3.7	2.7	2.0	1.8	1.5	1.3	1.0
33.0	3.0	2.1	1.6	1.4	1.2	1.0	
39.0	3.0	2.1	1.6	1.4	1.2	1.0	
47.0	2.0	1.7	1.3	1.2	1.0	0.8	
56.0	2.0	1.7	1.3	1.2	1.0		
68.0	1.8	1.3	1.0	0.9	0.8		
82.0	1.8	1.3	1.0	0.9			
100.0	1.6	1.0	0.8	0.6			
120.0	1.6	1.0	0.8				
150.0	0.9	0.8	0.6				
180.0	0.9	0.8					
220.0	0.9	0.6					
270.0	0.9						
330.0	0.7						

For additional Environmental Test Information see pages 80, 81 and 82.

- LEAD MATERIAL: Solder coated steel core with copper ply per MIL-STD-1276.
- LEAD TAPE and REEL: Reeling per specification RS-296. See pages 71 and 73 for additional information.

TANTALUM MOLDED / AXIAL — MIL-PRF-49137/1 & 5

T322 & T323 (CX01 & CX05) SERIES

Effective September 30, 2005, the KEMET T322 Series is RoHS compliant.

CAPACITOR OUTLINE DRAWINGS

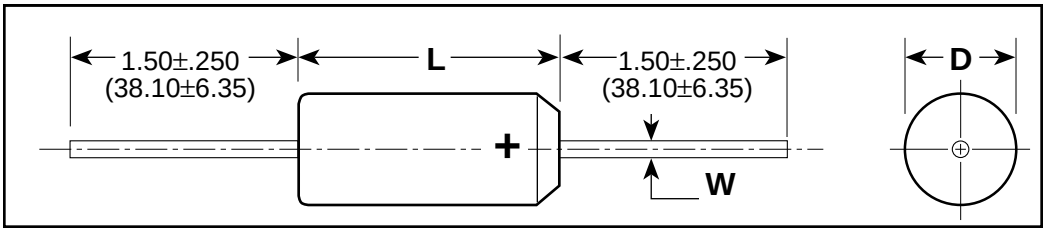

DIMENSIONS — INCHES & (MILLIMETERS)

CASE SIZE	D (MAX)	L (MAX)	W
A	.095 (2.41)	.260 (6.6)	.020 (.51)
B	.110 (2.79)	.290 (7.37)	.020 (.51)
C	.180 (4.57)	.345 (8.76)	.020 (.51)
D	.180 (4.57)	.420 (10.67)	.020 (.51)
E	.280 (7.11)	.530 (13.46)	.025 (.64)
F	.300 (7.62)	.710 (18.03)	.025 (.64)

T322 & T323 ORDERING INFORMATION

T 32X A 474 M 035 A S — C*

TANTALUM

SERIES
Sub-Miniature, Molded, Polar, Solid Tantalum, Insert appropriate number to replace letter "X" — 322 or 323 (CX01, CX05).

CASE SIZE
A, B, C, D, E, or F

CAPACITANCE IN PICOFARADS
First two digits are significant figures. Third digit is number of zeros following.

SPECIFICATION (when necessary
— Reeling Per EIA Specification RS-296

LEAD MATERIAL
S — Standard
T – 100% Tin

FAILURE RATE LEVEL
A — Not Applicable

VOLTAGE RATING

CAPACITANCE TOLERANCE
*M — ±20%
*K — ±10%
*J — ±5%

***Part Number Example: T322A474M035AS (14 digits – no spaces)**

* M & K only tolerances available for T323 Series.

MIL-PRF-49137/5 MILITARY ORDERING INFORMATION

CX 05 D 225 K

TYPE
Capacitor, Fixed, Solid Tantalum, Molded, Non-hermetically Sealed

STYLE
01, 05 (T323) A, B, C, and D

VOLTAGE

Symbol	Rated (85°C) Volts, DC	Surge (85°C) Volts, DC
D	6	8.0
F	10	13.0
H	15	20.0
J	20	26.0
K	25	32.0
M	35	46.0
N	50	65.0

CAPACITANCE TOLERANCE

Symbol	Capacitance Tolerance Percent (±)
K	10
M	20

CAPACITANCE TOLERANCE
The nominal capacitance value, expressed in picofarads (pF), is identified by a three-digit number; the first two digits represent significant figures and the last digit specifies the number of zeros to follow.

CAPACITOR MARKING

105M	Capacitance Value (pF), Capacitance Tolerance
+25 K	Polarity, Voltage, KEMET
0324	Date Code (Year, Week)

RATINGS & PART NUMBER REFERENCE

CAPACITANCE µF	CASE SIZE	CAPACITANCE TOLERANCE ±%	KEMET T322 SERIES KEMET PART NUMBER	D.C. LEAKAGE µA@25°C	MAX. DISSIPATION FACTOR %@25°C, 120 HZ	CX01 & CXO5 CAPACITORS PER MIL-PRF-49137/1 & 5 MILITARY PART NUMBER	KEMET PART NUMBER
2 VOLT RATING AT 85°C — 1.3 VOLT RATING AT 125°C							
6.8	**A**	**5,10,20**	**T322A685(1)002AS**	**0.5**	**10**		
8.2	A	5,10,20	T322A825(1)002AS	0.5	10		
10.0	A	5,10,20	T322A106(1)002AS	0.5	10		
12.0	B	5,10,20	T322B126(1)002AS	0.5	10		
15.0	**B**	**5,10,20**	**T322B156(1)002AS**	**0.5**	**10**		
18.0	B	5,10,20	T322B186(1)002AS	0.5	10		
22.0	**B**	**5,10,20**	**T322B226(1)002AS**	**0.5**	**10**		
27.0	B	5,10,20	T322B276(1)002AS	0.5	10		
33.0	**B**	**5,10,20**	**T322B336(1)002AS**	**0.5**	**10**		
39.0	C	5,10,20	T322C396(1)002AS	0.6	10		
47.0	**C**	**5,10,20**	**T322C476(1)002AS**	**0.8**	**10**		
56.0	C	5,10,20	T322C566(1)002AS	0.9	10		
68.0	**C**	**5,10,20**	**T322C686(1)002AS**	**1.1**	**10**		
4 VOLT RATING AT 85°C — 2.7 VOLT RATING AT 125°C							
4.7	**A**	**5,10,20**	**T322A475(1)004AS**	**0.5**	**8**		
5.6	A	5,10,20	T322A565(1)004AS	0.5	8		
6.8	**A**	**5,10,20**	**T322A685(1)004AS**	**0.5**	**8**		
8.2	B	5,10,20	T322B825(1)004AS	0.5	8		
10.0	**B**	**5,10,20**	**T322B106(1)004AS**	**0.5**	**8**		
12.0	B	5,10,20	T322B126(1)004AS	0.5	8		
15.0	**B**	**5,10,20**	**T322B156(1)004AS**	**0.5**	**8**		
18.0	B	5,10,20	T322B186(1)004AS	0.6	8		
22.0	**B**	**5,10,20**	**T322B226(1)004AS**	**0.7**	**8**		
27.0	C	5,10,20	T322C276(1)004AS	0.9	8		
33.0	**C**	**5,10,20**	**T322C336(1)004AS**	**1.1**	**8**		
39.0	C	5,10,20	T322C396(1)004AS	1.2	8		
47.0	**C**	**5,10,20**	**T322C476(1)004AS**	**1.5**	**8**		
56.0	D	5,10,20	T322D566(1)004AS	1.8	8		
68.0	**D**	**5,10,20**	**T322D686(1)004AS**	**2.2**	**8**		
6 VOLT RATING AT 85°C — 4 VOLT RATING AT 125°C							
3.3	**A**	**5,10,20**	**T322A335(1)006AS**	**0.5**	**4**		
3.9	A	5,10,20	T322A395(1)006AS	0.5	4		
4.7	**A**	**5**	**T322A475J006AS**	**0.5**	**4**		
4.7	**A**	**10**	**T322A475K006AS**	**0.5**	**4**	**CX05D475K**	**T323A475K006AS**
4.7	**A**	**20**	**T322A475M006AS**	**0.5**	**4**	**CX05D475M**	**T323A475M006AS**
5.6	B	5	T322B565J006AS	0.5	4		
5.6	B	10	T322B565K006AS	0.5	4	CX01D565K	T323B565K 006AS
5.6	B	20	T322B565M006AS	0.5	4	CX01D565M	T323B565M006AS
6.8	**B**	**5**	**T322B685J006AS**	**0.5**	**6**		
6.8	**B**	**10**	**T322B685K006AS**	**0.5**	**6**	**CX01D685K**	**T323B685K006AS**
6.8	**B**	**20**	**T322B685M006AS**	**0.5**	**6**	**CX01D685M**	**T323B685M006AS**
8.2	B	5	T322B825J006AS	0.5	6		
8.2	B	10	T322B825K006AS	0.5	6	CX01D825K	T323B825K 006AS
8.2	B	20	T322B825M006AS	0.5	6	CX01D825M	T323B825M006AS
10.0	**B**	**5**	**T322B106J006AS**	**0.5**	**6**		
10.0	**B**	**10**	**T322B106K006AS**	**0.5**	**6**	**CX01D106K**	**T323B106K006AS**
10.0	**B**	**20**	**T322B106M006AS**	**0.5**	**6**	**CX01D106M**	**T323B106M006AS**
12.0	B	5	T322B126J006AS	0.6	6		
12.0	B	10	T322B126K006AS	0.6	6	CX01D126K	T323B126K 006AS
12.0	B	20	T322B126M006AS	0.6	6	CX01D126M	T323B126M006AS
15.0	**B**	**5**	**T322B156J006AS**	**0.7**	**6**		
15.0	**B**	**10**	**T322B156K006AS**	**0.7**	**6**	**CX05D156K**	**T323B156K006AS**
15.0	**B**	**20**	**T322B156M006AS**	**0.7**	**6**	**CX05D156M**	**T323B156M006AS**
18.0	C	5,10,20	T322C186(1)006AS	0.9	6		
22.0	**C**	**5,10,20**	**T322C226(1)006AS**	**1.1**	**6**		
27.0	C	5,10,20	T322C276(1)006AS	1.3	6		
33.0	**C**	**5**	**T322C336J006AS**	**1.5**	**6**		
33.0	**C**	**10**	**T322C336K006AS**	**1.5**	**6**	**CX05D336K**	**T323C336K006AS**
33.0	**C**	**20**	**T322C336M006AS**	**1.5**	**6**	**CX05D336M**	**T323C336M006AS**
39.0	D	5,10,20	T322D396(1)006AS	1.9	6		
47.0	**D**	**5**	**T322D476J006AS**	**2.3**	**6**		
47.0	**D**	**10**	**T322D476K006AS**	**2.3**	**6**	**CX05D476K**	**T323D476K006AS**
47.0	**D**	**20**	**T322D476M006AS**	**2.3**	**6**	**CX05D476M**	**T323D476M006AS**
56.0	D	5,10,20	T322D566(1)006AS	2.7	6		
68.0	**D**	**5,10,20**	**T322D686(1)006AS**	**3.3**	**6**		

(1) To complete KEMET Part Number, insert Capacitance Tolerance Symbol as follows: M — ±20%, K — ±10%, J — ±5%
Bold Face lines indicate preferred part types and values.

RATINGS & PART NUMBER REFERENCE

CAPACITANCE µF	CASE SIZE	CAPACITANCE TOLERANCE ±%	KEMET T322 SERIES: KEMET PART NUMBER	KEMET T322 SERIES: D.C. LEAKAGE µA@25°C	KEMET T322 SERIES: MAX. DISSIPATION FACTOR %@25°C, 120 HZ	CX01 & CX05 CAPACITORS PER MIL-PRF-49137/1 & 5: MILITARY PART NUMBER	CX01 & CX05 CAPACITORS PER MIL-PRF-49137/1 & 5: KEMET PART NUMBER
6 VOLT RATING AT 85°C — 4 VOLT RATING AT 125°C (Cont'd)							
82.0	E	5,10,20	T322E826(1)006AS	3.9	8		
100.0	**E**	**5,10,20**	**T322E107(1)006AS**	**4.8**	**8**		
120.0	E	5,10,20	T322E127(1)006AS	5.0	8		
150.0	**E**	**5,10,20**	**T322E157(1)006AS**	**5.0**	**8**		
180.0	E	5,10,20	T322E187(1)006AS	8.6	8		
220.0	**E**	**5,10,20**	**T322E227(1)006AS**	**10.0**	**8**		
270.0	F	5,10,20	T322F277(1)006AS	10.0	8		
330.0	**F**	**5,10,20**	**T322F337(1)006AS**	**10.0**	**8**		
10 VOLT RATING AT 85°C — 7 VOLT RATING AT 125°C							
2.2	**A**	**5,10,20**	**T322A225(1)010AS**	**0.5**	**4**		
2.7	A	5,10,20	T322A275(1)010AS	0.5	4		
3.3	**A**	**5**	**T322A335J010AS**	**0.5**	**4**		
3.3	**A**	**10**	**T322A335K010AS**	**0.5**	**4**	**CX05F335K**	**T323A335K010AS**
3.3	**A**	**20**	**T322A335M010AS**	**0.5**	**4**	**CX05F335M**	**T323A335M010AS**
3.9	B	5,10,20	T322B395(1)010AS	0.5	4		
4.7	**B**	**5,10,20**	**T322B475(1)010AS**	**0.5**	**4**		
5.6	B	5,10,20	T322B565(1)010AS	0.5	4		
6.8	**B**	**5,10,20**	**T322B685(1)010AS**	**0.5**	**6**		
8.2	B	5,10,20	T322B825(1)010AS	0.7	6		
10.0	**B**	**5**	**T322B106J010AS**	**0.8**	**6**		
10.0	**B**	**10**	**T322B106K010AS**	**0.8**	**6**	**CX05F106K**	**T323B106K010AS**
10.0	**B**	**20**	**T322B106M010AS**	**0.8**	**6**	**CX05F106M**	**T323B106M010AS**
12.0	C	5,10,20	T322C126(1)010AS	1.0	6		
15.0	**C**	**5,10,20**	**T322C156(1)010AS**	**1.2**	**6**		
18.0	C	5,10,20	T322C186(1)010AS	1.4	6		
22.0	**C**	**5**	**T322C226J010AS**	**1.5**	**6**		
22.0	**C**	**10**	**T322C226K010AS**	**1.5**	**6**	**CX05F226K**	**T323C226K010AS**
22.0	**C**	**20**	**T322C226M010AS**	**1.5**	**6**	**CX05F226M**	**T323C226M010AS**
27.0	D	5	T322D276J010AS	2.2	6		
27.0	D	10	T322D276K010AS	2.2	6	CX05F276K	T323D276K010AS
27.0	D	20	T322D276M010AS	2.2	6	CX05F276M	T323D276M010AS
33.0	**D**	**5**	**T322D336J010AS**	**2.6**	**6**		
33.0	**D**	**10**	**T322D336K010AS**	**2.6**	**6**	**CX05F336K**	**T323D336K010AS**
33.0	**D**	**20**	**T322D336M010AS**	**2.6**	**6**	**CX05F336M**	**T323D336M010AS**
39.0	D	5	T322D396J010AS	3.1	6		
39.0	D	10	T322D396K010AS	3.1	6	CX05F396K	T323D396K010AS
39.0	D	20	T322D396M010AS	3.1	6	CX05F396M	T323D396M010AS
47.0	**D**	**5**	**T322D476J010AS**	**3.8**	**6**		
47.0	**D**	**10**	**T322D476K010AS**	**3.8**	**6**	**CX05F476K**	**T323D476K010AS**
47.0	**D**	**20**	**T322D476M010AS**	**3.8**	**6**	**CX05F476M**	**T323D476M010AS**
56.0	E	5,10,20	T322E566(1)010AS	4.4	6		
68.0	**E**	**5,10,20**	**T322E686(1)010AS**	**5.0**	**6**		
82.0	E	5,10,20	T322E826(1)010AS	5.0	8		
100.0	**E**	**5,10,20**	**T322E107(1)010AS**	**8.0**	**8**		
120.0	E	5,10,20	T322E127(1)010AS	9.6	8		
150.0	**E**	**5,10,20**	**T322E157(1)010AS**	**10.0**	**8**		
180.0	F	5,10,20	T322F187(1)010AS	10.0	8		
220.0	**F**	**5,10,20**	**T322F227(1)010AS**	**10.0**	**8**		
15 VOLT RATING AT 85°C — 10 VOLT RATING AT 125°C							
1.5	**A**	**5,10,20**	**T322A155(1)015AS**	**0.5**	**4**		
1.8	A	5,10,20	T322A185(1)015AS	0.5	4		
2.2	**A**	**5**	**T322A225J015AS**	**0.5**	**4**		
2.2	**A**	**10**	**T322A225K015AS**	**0.5**	**4**	**CX05H225K**	**T323A225K015AS**
2.2	**A**	**20**	**T322A225M015AS**	**0.5**	**4**	**CX05H225M**	**T323A225M015AS**
2.7	B	5,10,20	T322B275(1)015AS	0.5	4		
3.3	**B**	**5,10,20**	**T322B335(1)015AS**	**0.5**	**4**		
3.9	B	5,10,20	T322B395(1)015AS	0.5	4		
4.7	**B**	**5,10,20**	**T322B475(1)015AS**	**0.6**	**4**		
5.6	B	5,10,20	T322B565(1)015AS	0.7	4		
6.8	**B**	**5**	**T322B685J015AS**	**0.8**	**6**		
6.8	**B**	**10**	**T322B685K015AS**	**0.8**	**6**	**CX05H685K**	**T323B685K015AS**
6.8	**B**	**20**	**T322B685M015AS**	**0.8**	**6**	**CX05H685M**	**T323B685M015AS**
8.2	C	5,10,20	T322C825(1)015AS	1.0	6		
10.0	**C**	**5,10,20**	**T322C106(1)015AS**	**1.2**	**6**		
12.0	C	5,10,20	T322C126(1)015AS	1.4	6		
15.0	**C**	**5**	**T322C156J015AS**	**1.5**	**6**		
15.0	**C**	**10**	**T322C156K015AS**	**1.5**	**6**	**CX05H156K**	**T323C156K015AS**
15.0	**C**	**20**	**T322C156M015AS**	**1.5**	**6**	**CX05H156M**	**T323C156M015AS**

(1) To complete KEMET Part Number, insert Capacitance Tolerance Symbol as follows: M — ±20%, K — ±10%, J — ±5%
Bold Face lines indicate preferred part types and values.

RATINGS & PART NUMBER REFERENCE

CAPACITANCE µF	CASE SIZE	CAPACITANCE TOLERANCE ±%	KEMET T322 SERIES: KEMET PART NUMBER	KEMET T322 SERIES: D.C. LEAKAGE µA@25°C	KEMET T322 SERIES: MAX. DISSIPATION FACTOR %@25°C, 120 HZ	CX01 & CXO5 CAPACITORS PER MIL-PRF-49137/1 & 5: MILITARY PART NUMBER	CX01 & CXO5 CAPACITORS PER MIL-PRF-49137/1 & 5: KEMET PART NUMBER
15 VOLT RATING AT 85°C — 10 VOLT RATING AT 125°C (Cont'd)							
18.0	D	5,10,20	T322D186(1)015AS	2.2	6		
22.0	**D**	**5**	**T322D226J015AS**	**2.6**	**6**		
22.0	**D**	**10**	**T322D226K015AS**	**2.6**	**6**	**CX05H226K**	**T323D226K015AS**
22.0	**D**	**20**	**T322D226M015AS**	**2.6**	**6**	**CX05H226M**	**T323D226M015AS**
27.0	D	5,10,20	T322D276(1)015AS	3.2	6		
33.0	**D**	**5**	**T322D336J015AS**	**4.0**	**6**		
33.0	**D**	**10**	**T322D336K015AS**	**4.0**	**6**	**CX05H336K**	**T323D336K015AS**
33.0	**D**	**20**	**T322D336M015AS**	**4.0**	**6**	**CX05H336M**	**T323E336M015AS**
39.0	E	5,10,20	T322E396(1)015AS	4.7	6		
47.0	**E**	**5,10,20**	**T322E476(1)015AS**	**5.0**	**6**		
56.0	**E**	**5,10,20**	**T322E566(1)015AS**	**6.7**	**6**		
68.0	**E**	**5,10,20**	**T322E686(1)015AS**	**8.2**	**6**		
82.0	E	5,10,20	T322E826(1)015AS	9.8	8		
100.0	**E**	**5,10,20**	**T322E107(1)015AS**	**10.0**	**8**		
120.0	F	5,10,20	T322F127(1)015AS	10.0	8		
150.0	**F**	**5,10,20**	**T322F157(1)015AS**	**10.0**	**8**		
20 VOLT RATING AT 85°C — 13 VOLT RATING AT 125°C							
1.0	**A**	**5,10,20**	**T322A105(1)020AS**	**0.5**	**4**		
1.2	A	5,10,20	T322A125(1)020AS	0.5	4		
1.5	**A**	**5**	**T322A155J020AS**	**0.5**	**4**		
1.5	**A**	**10**	**T322A155K020AS**	**0.5**	**4**	**CX05J155K**	**T323A155K020AS**
1.5	**A**	**20**	**T322A155M020AS**	**0.5**	**4**	**CX05J155M**	**T323A155M020AS**
1.8	B	5,10,20	T322B185(1)020AS	0.5	4		
2.2	**B**	**5,10,20**	**T322B225(1)020AS**	**0.5**	**4**		
2.7	B	5,10,20	T322B275(1)020AS	0.5	4		
3.3	**B**	**5,10,20**	**T322B335(1)020AS**	**0.5**	**4**		
3.9	B	5,10,20	T322B395(1)020AS	0.6	4		
4.7	**B**	**5**	**T322B475J020AS**	**0.8**	**4**		
4.7	**B**	**10**	**T322B475K020AS**	**0.8**	**4**	**CX05J475K**	**T323B475K020AS**
4.7	**B**	**20**	**T322B475M020AS**	**0.8**	**4**	**CX05J475M**	**T323B475M020AS**
5.6	C	5,10,20	T322C565(1)020AS	0.9	4		
6.8	C	5,10,20	T322C685(1)020AS	1.1	6		
8.2	C	5,10,20	T322C825(1)020AS	1.3	6		
10.0	**C**	**5,10,20**	**T322C106(1)020AS**	**1.6**	**6**		
12.0	D	5	T322D126J020AS	1.9	6		
12.0	D	10	T322D126K020AS	1.9	6	CX05J126K	T323D126K020AS
12.0	D	20	T322D126M020AS	1.9	6	CX05J126M	T323D126M020AS
15.0	**D**	**5**	**T322D156J020AS**	**2.4**	**6**		
15.0	**D**	**10**	**T322D156K020AS**	**2.4**	**6**	**CX05J156K**	**T323D156K020AS**
15.0	**D**	**20**	**T322D156M020AS**	**2.4**	**6**	**CX05J156M**	**T323D156M020AS**
18.0	D	5,10,20	T322D186(1)020AS	2.9	6		
22.0	**D**	**5,10,20**	**T322D226(1)020AS**	**3.5**	**6**		
27.0	E	5,10,20	T322E276(1)020AS	4.3	6		
33.0	**E**	**5,10,20**	**T322E336(1)020AS**	**5.0**	**6**		
39.0	E	5,10,20	T322E396(1)020AS	6.2	6		
47.0	**E**	**5,10,20**	**T322E476(1)020AS**	**7.5**	**6**		
56.0	E	5,10,20	T322E566(1)020AS	8.9	6		
68.0	**E**	**5,10,20**	**T322E686(1)020AS**	**10.0**	**6**		
82.0	F	5,10,20	T322F826(1)020AS	10.0	8		
100.0	**F**	**5,10,20**	**T322F107(1)020AS**	**10.0**	**8**		
25 VOLT RATING AT 85°C — 17 VOLT RATING AT 125°C							
0.47	**A**	**5,10,20**	**T322A474(1)025AS**	**0.5**	**3**		
0.56	A	5,10,20	T322A564(1)025AS	0.5	3		
0.68	**A**	**5,10,20**	**T322A684(1)025AS**	**0.5**	**3**		
0.82	A	5,10,20	T322A824(1)025AS	0.5	3		
1.0	**A**	**5**	**T322A105J025AS**	**0.5**	**3**		
1.0	**A**	**10**	**T322A105K025AS**	**0.5**	**3**	**CX05K105K**	**T323A105K025AS**
1.0	**A**	**20**	**T322A105M025AS**	**0.5**	**3**	**CX05K105M**	**T323A105M025AS**
1.2	B	5,10,20	T322B125(1)025AS	0.5	3		
1.5	**B**	**5**	**T322B155J025AS**	**0.5**	**3**		
1.5	**B**	**10**	**T322B155K025AS**	**0.5**	**3**	**CX01K155K**	**T323B155K025AS**
1.5	**B**	**20**	**T322B155M025AS**	**0.5**	**3**	**CX01K155M**	**T323B155M020AS**
1.8	B	5	T322B185J025AS	0.5	3		
1.8	B	10	T322B185K025AS	0.5	3	CX01K185K	T323B185K025AS
1.8	B	20	T322B185M025AS	0.5	3	CX01K185M	T323B185M025AS
2.2	**B**	**5**	**T322B225J025AS**	**0.5**	**3**		
2.2	**B**	**10**	**T322B225K025AS**	**0.5**	**3**	**CX05K225K**	**T323B225K025AS**

(1) To complete KEMET Part Number, insert Capacitance Tolerance Symbol as follows: M — ±20%, K — ±10%, J — ±5%
Bold Face lines indicate preferred part types and values.

RATINGS & PART NUMBER REFERENCE

CAPACITANCE µF	CASE SIZE	CAPACITANCE TOLERANCE ±%	KEMET T322 SERIES: KEMET PART NUMBER	KEMET T322 SERIES: D.C. LEAKAGE µA@25°C	KEMET T322 SERIES: MAX. DISSIPATION FACTOR %@25°C, 120 HZ	CX01 & CX05 CAPACITORS PER MIL-PRF-49137/1 & 5: MILITARY PART NUMBER	CX01 & CX05 CAPACITORS PER MIL-PRF-49137/1 & 5: KEMET PART NUMBER
25 VOLT RATING AT 85°C — 17 VOLT RATING AT 125°C (Cont'd)							
2.2	**B**	**20**	**T322B225M025AS**	**0.5**	**3**	**CX01/5K225M**	**T323B225M025AS**
2.7	B	5,10,20	T322B275(1)025AS	0.5	3		
3.3	**B**	**5**	**T322B335J025AS**	**0.7**	**3**		
3.3	**B**	**10**	**T322B335K025AS**	**0.7**	**3**	**CX05K335K**	**T323B335K025AS**
3.3	**B**	**20**	**T322B335M025AS**	**0.7**	**3**	**CX05K335M**	**T323B335M025AS**
3.9	C	5,10,20	T322C395(1)025AS	0.8	3		
4.7	**C**	**5,10,20**	**T322C475(1)025AS**	**0.9**	**4**		
5.6	C	5,10,20	T322C565(1)025AS	1.1	4		
6.8	**C**	**5**	**T322C685J025AS**	**1.4**	**4**		
6.8	**C**	**10**	**T322C685K025AS**	**1.4**	**4**	**CX05K685K**	**T323C685K025AS**
6.8	**C**	**20**	**T322C685M025AS**	**1.4**	**4**	**CX05K685M**	**T323C685M025AS**
8.2	C	5,10,20	T322C825(1)025AS	1.5	4		
10.0	C	5	T322C106J025AS	1.5	4		
10.0	C	10	T322C106K025AS	1.5	4	CX05K106K	T323C106K025AS
10.0	C	20	T322C106M025AS	1.5	4	CX05K106M	T323C106M025AS
12.0	D	5,10,20	T322D126(1)025AS	2.4	4		
15.0	**D**	**5,10,20**	**T322D156(1)025AS**	**3.0**	**4**		
18.0	E	5,10,20	T322E186(1)025AS	3.6	6		
22.0	**E**	**5,10,20**	**T322E226(1)025AS**	**4.4**	**6**		
27.0	E	5,10,20	T322E276(1)025AS	5.4	6		
33.0	**E**	**5,10,20**	**T322E336(1)025AS**	**6.6**	**6**		
39.0	E	5,10,20	T322E396(1)025AS	7.8	6		
47.0	**E**	**5,10,20**	**T322E476(1)025AS**	**9.4**	**6**		
56.0	F	5,10,20	T322F566(1)025AS	10.0	6		
68.0	**F**	**5,10,20**	**T322F686(1)025AS**	**10.0**	**6**		
35 VOLT RATING AT 85°C — 23 VOLT RATING AT 125°C							
0.1	**A**	**5,10,20**	**T322A104(1)035AS**	**0.5**	**3**		
0.12	A	5,10,20	T322A124(1)035AS	0.5	3		
0.15	**A**	**5,10,20**	**T322A154(1)035AS**	**0.5**	**3**		
0.18	A	5,10,20	T322A184(1)035AS	0.5	3		
0.22	**A**	**5,10,20**	**T322A224(1)035AS**	**0.5**	**3**		
0.27	A	5,10,20	T322A274(1)035AS	0.5	3		
0.33	**A**	**5**	**T322A334J035AS**	**0.5**	**3**		
0.33	**A**	**10**	**T322A334K035AS**	**0.5**	**3**	**CX05M334K**	**T323A334K035AS**
0.33	**A**	**20**	**T322A334M035AS**	**0.5**	**3**	**CX05M334M**	**T323A334M035AS**
0.39	A	5,10,20	T322A394(1)035AS	0.5	3		
0.47	**A**	**5**	**T322A474J035AS**	**0.5**	**3**		
0.47	**A**	**10**	**T322A474K035AS**	**0.5**	**3**	**CX05M474K**	**T323A474K035AS**
0.47	**A**	**20**	**T322A474M035AS**	**0.5**	**3**	**CX05M474M**	**T323A474M035AS**
0.56	B	5	T322B564J035AS	0.5	3		
0.56	B	10	T322B564K035AS	0.5	3	CX01M564K	T323B564K035AS
0.56	B	20	T322B564M035AS	0.5	3	CX01M564M	T323B564M035AS
0.68	**B**	**5**	**T322B684J035AS**	**0.5**	**3**		
0.68	**B**	**10**	**T322B684K035AS**	**0.5**	**3**	**CX01M684K**	**T323B684K035AS**
0.68	**B**	**20**	**T322B684M035AS**	**0.5**	**3**	**CX01M684M**	**T323B684M035AS**
0.82	B	5	T322B824J035AS	0.5	3		
0.82	B	10	T322B824K035AS	0.5	3	CX01M824K	T323B824K035AS
0.82	B	20	T322B824M035AS	0.5	3	CX01M824M	T323B824M035AS
1.0	**B**	**5**	**T322B105J035AS**	**0.5**	**3**		
1.0	**B**	**10**	**T322B105K035AS**	**0.5**	**3**	**CX01M105K**	**T323B105K035AS**
1.0	**B**	**20**	**T322B105M035AS**	**0.5**	**3**	**CX01M105M**	**T323B105M035AS**
1.2	B	5	T322B125J035AS	0.5	3		
1.2	B	10	T322B125K035AS	0.5	3	CX01M125K	T323B125K035AS
1.2	B	20	T322B125M035AS	0.5	3	CX01M125M	T323B125M035AS
1.5	**B**	**5**	**T322B155J035AS**	**0.5**	**3**		
1.5	**B**	**10**	**T322B155K035AS**	**0.5**	**3**	**CX05M155K**	**T323B155K035AS**
1.5	**B**	**20**	**T322B155M035AS**	**0.5**	**3**	**CX05M155M**	**T323B155M035AS**
1.8	C	5,10,20	T322C185(1)035AS	0.5	3		
2.2	**C**	**5,10,20**	**T322C225(1)035AS**	**0.6**	**3**		
2.7	C	5,10,20	T322C275(1)035AS	0.8	3		
3.3	**C**	**5**	**T322C335J035AS**	**0.9**	**4**		
3.3	**C**	**10**	**T322C335K035AS**	**0.9**	**4**	**CX05M335K**	**T323C335K035AS**
3.3	**C**	**20**	**T322C335M035AS**	**0.9**	**4**	**CX05M335M**	**T323C335M035AS**
3.9	C	5	T322C395J035AS	1.1	4		
3.9	C	10	T322C395K035AS	1.1	4	CX05M395K	T323C395K035AS
3.9	C	20	T322C395M035AS	1.1	4	CX05M395M	T323C395M035AS
4.7	**C**	**5**	**T322C475J035AS**	**1.3**	**4**		
4.7	**C**	**10**	**T322C475K035AS**	**1.3**	**4**	**CX05M475K**	**T323C475K035AS**
4.7	**C**	**20**	**T322C475M035AS**	**1.3**	**4**	**CX05M475M**	**T323C475M035AS**

(1) To complete KEMET Part Number, insert Capacitance Tolerance Symbol as follows: M — ±20%, K — ±10%, J — ±5%
Bold Face lines indicate preferred part types and values.

RATINGS & PART NUMBER REFERENCE

CAPACITANCE µF	CASE SIZE	CAPACITANCE TOLERANCE ±%	KEMET T322 SERIES: KEMET PART NUMBER	KEMET T322 SERIES: D.C. LEAKAGE µA@25°C	KEMET T322 SERIES: MAX. DISSIPATION FACTOR %@25°C, 120 HZ	CX01 & CXO5 CAPACITORS PER MIL-PRF-49137/1 & 5: MILITARY PART NUMBER	CX01 & CXO5 CAPACITORS PER MIL-PRF-49137/1 & 5: KEMET PART NUMBER
35 VOLT RATING AT 85°C — 23 VOLT RATING AT 125°C							
5.6	D	5,10,20	T322D565(1)035AS	1.6	4		
6.8	**D**	**5**	**T322D685J035AS**	**1.9**	**4**		
6.8	**D**	**10**	**T322D685K035AS**	**1.9**	**4**	**CX05M685K**	**T323D685K035AS**
6.8	**D**	**20**	**T322D685M035AS**	**1.9**	**4**	**CX05M685M**	**T323D685M035AS**
8.2	D	5,10,20	T322D825(1)035AS	2.3	4		
10.0	**D**	**5**	**T322D106J035AS**	**2.8**	**4**		
10.0	**D**	**10**	**T322D106K035AS**	**2.8**	**4**	**CX05M106K**	**T323D106K035AS**
10.0	**D**	**20**	**T322D106M035AS**	**2.8**	**4**	**CX05M106M**	**T323D106M035AS**
12.0	E	5,10,20	T322E126(1)035AS	3.3	4		
15.0	**E**	**5,10,20**	**T322E156(1)035AS**	**4.2**	**6**		
18.0	E	5,10,20	T322E186(1)035AS	5.0	6		
22.0	**E**	**5,10,20**	**T322E226(1)035AS**	**6.2**	**6**		
27.0	E	5,10,20	T322E276(1)035AS	7.5	6		
33.0	**E**	**5,10,20**	**T322E336(1)035AS**	**9.2**	**6**		
39.0	F	5,10,20	T322F396(1)035AS	10.0	6		
47.0	**F**	**5,10,20**	**T322F476(1)035AS**	**10.0**	**6**		
50 VOLT RATING AT 85°C — 33 VOLT RATING AT 125°C							
0.1	**A**	**5**	**T322A104J050AS**	**0.5**	**3**		
0.1	**A**	**10**	**T322A104K050AS**	**0.5**	**3**	**CX05N104K**	**T323A104K050AS**
0.1	**A**	**20**	**T322A104M050AS**	**0.5**	**3**	**CX05N104M**	**T323A104M050AS**
0.12	A	5,10,20	T322A124(1)050AS	0.5	3		
0.15	**A**	**5**	**T322A154J050AS**	**0.5**	**3**		
0.15	**A**	**10**	**T322A154K050AS**	**0.5**	**3**	**CX05N154K**	**T323A154K050AS**
0.15	**A**	**20**	**T322A154M050AS**	**0.5**	**3**	**CX05N154M**	**T323A154M050AS**
0.18	A	5,10,20	T322A184(1)050AS	0.5	3		
0.22	**A**	**5**	**T322A224J050AS**	**0.5**	**3**		
0.22	**A**	**10**	**T322A224K050AS**	**0.5**	**3**	**CX05N224K**	**T323A224K050AS**
0.22	**A**	**20**	**T322A224M050AS**	**0.5**	**3**	**CX05N224M**	**T323A224M050AS**
0.27	A	5,10,20	T322A274(1)050AS	0.5	3		
0.33	**B**	**5**	**T322B334J050AS**	**0.5**	**3**		
0.33	**B**	**10**	**T322B334K050AS**	**0.5**	**3**	**CX05N334K**	**T323B334K050AS**
0.33	**B**	**20**	**T322B334M050AS**	**0.5**	**3**	**CX05N334M**	**T323B334M050AS**
0.39	B	5	T322B394J050AS	0.5	3		
0.39	B	10	T322B394K050AS	0.5	3	CX05N394K	T323B394K050AS
0.39	B	20	T322B394M050AS	0.5	3	CX05N394M	T323B394M050AS
0.47	**B**	**5**	**T322B474J050AS**	**0.5**	**3**		
0.47	**B**	**10**	**T322B474K050AS**	**0.5**	**3**	**CX05N474K**	**T323B474K050AS**
0.47	**B**	**20**	**T322B474M050AS**	**0.5**	**3**	**CX05N474M**	**T323B474M050AS**
0.56	B	5,10,20	T322B564(1)050AS	0.5	3		
0.68	**B**	**5**	**T322B684J050AS**	**0.5**	**3**		
0.68	**B**	**10**	**T322B684K050AS**	**0.5**	**3**	**CX05N684K**	**T323B684K050AS**
0.68	**B**	**20**	**T322B684M050AS**	**0.5**	**3**	**CX05N684M**	**T323B684M050AS**
0.82	B	5,10,20	T322B824(1)050AS	0.5	3		
1.0	**B**	**5**	**T322B105J050AS**	**0.5**	**3**		
1.0	**B**	**10**	**T322B105K050AS**	**0.5**	**3**	**CX05N105K**	**T323B105K050AS**
1.0	**B**	**20**	**T322B105M050AS**	**0.5**	**3**	**CX05N105M**	**T323B105M050AS**
1.2	C	5,10,20	T322C125(1)050AS	0.5	3		
1.5	**C**	**5**	**T322C155J050AS**	**0.6**	**4**		
1.5	**C**	**10**	**T322C155K050AS**	**0.6**	**4**	**CX05N155K**	**T323C155K050AS**
1.5	**C**	**20**	**T322C155M050AS**	**0.6**	**4**	**CX05N155M**	**T323C155M050AS**
1.8	C	5,10,20	T322C185(1)050AS	0.7	4		
2.2	**C**	**5**	**T322C225J050AS**	**0.9**	**4**		
2.2	**C**	**10**	**T322C225K050AS**	**0.9**	**4**	**CX05N225K**	**T323C225K050AS**
2.2	**C**	**20**	**T322C225M050AS**	**0.9**	**4**	**CX05N225M**	**T323C225M050AS**
2.7	D	5,10,20	T322D275(1)050AS	1.1	4		
3.3	**D**	**5**	**T322D335J050AS**	**1.3**	**4**		
3.3	**D**	**10**	**T322D335K050AS**	**1.3**	**4**	**CX05N335K**	**T323D335K050AS**
3.3	**D**	**20**	**T322D335M050AS**	**1.3**	**4**	**CX05N335M**	**T323D335M050AS**
3.9	D	5,10,20	T322D395(1)050AS	1.6	4		
4.7	**D**	**5**	**T322D475J050AS**	**1.9**	**4**		
4.7	**D**	**10**	**T322D475K050AS**	**1.9**	**4**	**CX05N475K**	**T323D475K050AS**
4.7	**D**	**20**	**T322D475M050AS**	**1.9**	**4**	**CX05N475M**	**T323D475M050AS**
5.6	E	5,10,20	T322E565(1)050AS	2.2	4		
6.8	**E**	**5,10,20**	**T322E685(1)050AS**	**2.7**	**4**		
8.2	E	5,10,20	T322E825(1)050AS	3.2	4		
10.0	**E**	**5,10,20**	**T322E106(1)050AS**	**4.0**	**6**		
12.0	F	5,10,20	T322F126(1)050AS	4.8	6		
15.0	**F**	**5,10,20**	**T322F156(1)050AS**	**6.0**	**6**		
18.0	F	5,10,20	T322F186(1)050AS	7.2	6		
22.0	**F**	**5,10,20**	**T322F226(1)050AS**	**8.8**	**6**		

(1) To complete KEMET Part Number, insert Capacitance Tolerance Symbol as follows: M — ±20%, K — ±10%, J — ±5%
Bold Face lines indicate preferred part types and values.

T330 Series

KEMET T330 Series, polar-type, radial lead rectangular Precision Molded Tantalum (PMT) capacitors are primarily designed for applications that demand full use of the premium space available in printed circuitry and high density packaging. Compact, space saving T330 Series capacitors provide superior packing factor and space utilization compared with tubular units of the same microcoulomb (CV) rating.

T330 Series capacitors employ a rectangular sintered, dry tantalum anode, transfer molded in precision dies with a high impact resistant plastic having excellent electrical, physical, and moisture resistant properties. All cases utilize gold color plastic which permits laser marking with outstanding permanency and legibility. The polarity is indicated by a + sign permanently marked on the case. The radius on the two vertical edges at the positive end of B, C, and D Cases can be used as a sensing dimension for automatic insertion processes.

The location of the standoffs may serve a similar sensing function for the A Case. These standoffs, located in the base of all case sizes, provide vents for air circulation and also allow easy removal of flux residues from leadwire and circuit board solder joints.

T330 Series capacitors are highly reliable and exhibit performance characteristics typical of military test standards. They are available in capacitance values ranging from 0.1 to 220 microfarads in ±20, ±10, ±5% tolerance levels, and in working voltages from 6 to 50 volts. At 85°C the capacitors will operate continuously at full rated voltage. They are rated to 125°C when operated at 2/3 of nameplate voltage. In addition, they feature exceptionally low DC leakage and Dissipation Factor characteristics.

They are ideal for bypass, coupling, and timing applications in computers, military ordinance, industrial, entertainment, and consumer electronic equipment.

T340 Series

The compact space saving T340 Series is transfer molded in precision dies with a high impact resistant plastic having excellent electrical, physical, and moisture resistant properties. The gold color plastic case utilized permits laser marking with outstanding permanency and legibility.

Marking is provided on the top of the case to allow visual inspection for proper polarity and placement after insertion. In addition, positive polarity identification is achieved by an easily recognized molded radius on the positive end of the case. This physical polarity identification is readily observed after capacitor placement as a further aid to the top marking in prevention of possible reverse insertion.

Standoffs, located in the base of all case sizes, provide vents for air circulation and also allow easy removal of flux residues from leadwire and circuit board solder joints. With very low impedance and ESR values, the T340 Series features exceptionally low DC leakage and DF characteristics. The T340 Series is available in standard ±20%; ±10%; ±5% (special order) capacitance tolerance.

T340 Series capacitors are highly reliable and exhibit performance characteristics typical of military test standards.

PERFORMANCE CHARACTERISTICS

- CAPACITANCE/VOLTAGE RANGE:
  T330: 0.1-220µF, 6-50 Volts.
  T340: 0.1-330µF, 6-50 Volts.
- CAPACITANCE TOLERANCE: Available in standard EIA nominal values with ±20% tolerance standard, ±10% and ±5% available on special order.
- DISSIPATION FACTOR: Maximum DF limits are shown in corresponding series part number listing. See Application Notes Section, page 78.
- DC LEAKAGE CURRENT: Maximum leakage values at 25°C are shown in part number listings, pages 51, 52, 55, 56 and 57. See Application Notes Section, page 76.

T330/T340 ESR (OHMS) at 100 kHz @ +25°C
(The ESR values provided below are for reference only.
No warranty, as stated on page 3 and reincorporated here,is made as to
the accuracy of these values for any particular T330/T340 Series product.)

Cap. µF	6 Volt	10 Volt	15 Volt	20 Volt	25 Volt	35 Volt	50 Volt
0.10						26.0	26.0
0.15						21.0	21.0
0.22						17.0	17.0
0.33						15.0	15.0
0.47						13.0	13.0
0.68						10.0	10.0
1.00						8.0	8.0
1.50					8.0	6.0	5.0
2.20				7.0	6.0	5.0	3.5
3.30			6.0	5.5	5.0	4.0	3.0
4.70		8.0	5.0	4.5	4.0	3.0	2.5
6.80	8.0	6.0	4.0	3.6	3.1	2.5	2.0
10.0	6.0	5.0	3.2	2.9	2.5	2.0	1.6
15.0	5.0	3.7	2.5	2.3	2.0	1.6	1.2
22.0	3.7	2.7	2.0	1.8	1.5	1.3	1.0
33.0	3.0	2.1	1.6	1.4	1.2	1.0	
47.0	2.0	1.7	1.3	1.2	1.0	0.8	
68.0	1.8	1.3	1.0	0.9	0.8		
100.0	1.6	1.0	0.8	0.6			
150.0	0.9	0.8	0.6				
220.0	0.9	0.6					
330.0	0.7						

- RATED VOLTAGE; WORKING VOLTAGE; SURGE VOLTAGE; REVERSE VOLTAGE: See Application Notes Section, pages 76 & 77 for description.
- IMPEDANCE and ESR: See Application Notes Section, page 77 & 78 for additional information. Reference ESR values are shown in table below.
- AC RIPPLE VOLTAGE: Permissible AC ripple voltage is related to ESR of the capacitor and the power dissipation capabilities of a particular case size. Thermal capacities for the various case sizes have been determined and are listed in Table below. For additional description see page 78.

Series	Case Size	Watts
T330/T340	A	.09
	B	.09
	C	.100
T330	D	.125
T340 only	D/F	.125
	E	.180

Maximum Power Dissipation: 25°C Ambient

- ENVIRONMENTAL CONSIDERATIONS:
  A. Shock Test: MIL-STD-202, Method 213.
  B. Thermal Shock, MIL-STD-202, Method 107.
  C. Moisture Resistance: MIL-STD-202, Method 106.
  D. Solderability: MIL-STD-202, Method 208.
  For additional Environmental Test Information see pages 80, 81 and 82.
- LEAD MATERIAL: Solder coated steel core with copper ply per MIL-STD-1276.
- LEAD TAPE and REEL: Reeling per specification RS-468. See pages 71 and 73 for additional information.

CAPACITOR OUTLINE DRAWINGS

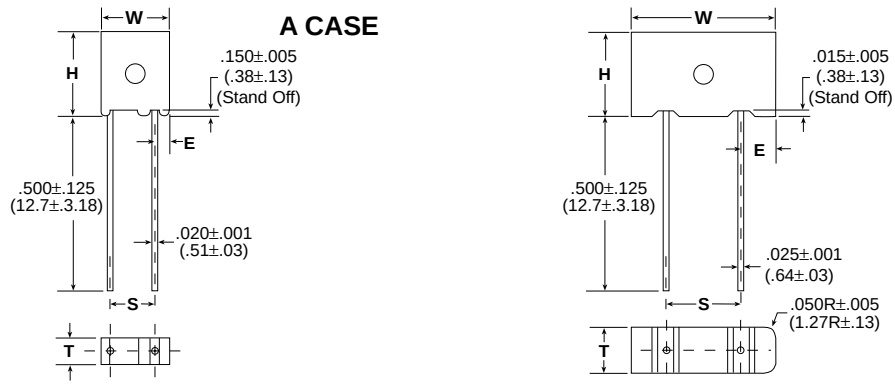

Note:
On the "B" case size the stand off appears only between the two leadss

DIMENSIONS — INCHES & (MILLIMETERS)

CASE SIZE	H CASE HEIGHT	W CASE WIDTH	T CASE THICKNESS	E CASE TO WIRE	S LEAD SPACING
A	.345 ± .008 (8.76 ± .203)	.230 ± .005 (5.84 ± .127)	.105 ± .005 (2.67 ± .127)	.050 ± .010 (1.27 ± .25)	.125 ± .005 (3.18 ± .127)
B	.225 ± .015 (5.71 ± 0.38)	.285 ± .015 (7.24 ± 0.38)	.170 ± .015 (4.32 ± 0.38)	.042 ± .010 (1.07 ± .25)	.200 ± .005 (5.08 ± .127)
C	.325 ± .015 (8.26 ± 0.38)	.325 ± .015 (8.26 ± 0.38)	.170 ± .015 (4.32 ± 0.38)	.062 ± .010 (1.57 ± 0.25)	.200 ± .005 (5.08 ± .127)
D	.375 ± .015 (9.53 ± 0.38)	.600 ± .015 (15.24 ± 0.38)	.195 ± .015 (4.95 ± 0.38)	.200 ± .010 (5.08 ± 0.25)	.200 ± .005 (5.08 ± .127)

ORDERING INFORMATION

T 330 B 104 M 035 A S*

TANTALUM

SERIES
Radial Lead
Precision Molded Polar
Solid Tantalum

CASE SIZE
A / B / C / D

PICOFARAD CODE
First two digits are significant figures.
Third digit is the number of zeros following.

LEAD MATERIAL
S — Standard (Solder-Coated Nickel)

FAILURE RATE LEVEL
A — Not Applicable

VOLTAGE RATING

CAP. TOLERANCE
M — ±20% — Std.
K — ±10% — Std.
J — ±5% — Available on request

***Part Number Example: T330B104M035AS (14 digits – no spaces)**

MARKING INFORMATION

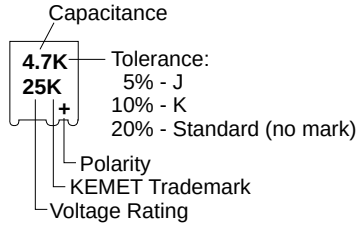

RATINGS & PART NUMBER REFERENCE

A CASE

CAPACITANCE µF	CASE SIZE	KEMET PART NUMBER	D.C. LEAKAGE µA@25°C	MAX. DISSIPATION FACTOR %@25°C, 120Hz
6 VOLT RATING AT 85°C — 4 VOLT RATING AT 125°C				
18.0	A	T330A186(1)006AS	1	6
22.0	**A**	**T330A226(1)006AS**	**1**	**6**
10 VOLT RATING AT 85°C — 7 VOLT RATING AT 125°C				
10.0	**A**	**T330A106(1)010AS**	**1**	**6**
12.0	A	T330A126(1)010AS	1	6
15.0	A	T330A156(1)010AS	1	6
15 VOLT RATING AT 85°C — 10 VOLT RATING AT 125°C				
8.2	A	T330A825(1)015AS	1	6
20 VOLT RATING AT 85°C — 13 VOLT RATING AT 125°C				
5.6	A	T330A565(1)020AS	1	6
6.8	**A**	**T330A685(1)020AS**	**1**	**6**
25 VOLT RATING AT 85°C — 17 VOLT RATING AT 125°C				
3.3	A	T330A335(1)025AS	1	4
3.9	A	T330A395(1)025AS	1	4
4.7	**A**	**T330A475(1)025AS**	**1**	
35 VOLT RATING AT 85°C — 23 VOLT RATING AT 125°C				
0.10	A	T330A104(1)035AS	1	3
0.12	A	T330A124(1)035AS	1	3
0.15	A	T330A154(1)035AS	1	3
0.18	A	T330A184(1)035AS	1	3
0.22	A	T330A224(1)035AS	1	3
0.27	A	T330A274(1)035AS	1	3
0.33	A	T330A334(1)035AS	1	3

CAPACITANCE µF	CASE SIZE	KEMET PART NUMBER	D.C. LEAKAGE µA@25°C	MAX. DISSIPATION FACTOR %@25°C, 120Hz
35 VOLT RATING AT 85°C — 23 VOLT RATING AT 125°C				
0.39	A	T330A394(1)035AS	1	3
0.47	A	T330A474(1)035AS	1	3
0.56	A	T330A564(1)035AS	1	3
0.68	A	T330A684(1)035AS	1	3
0.82	A	T330A824(1)035AS	1	3
1.0	**A**	**T330A105(1)035AS**	**1**	**3**
1.2	A	T330A125(1)035AS	1	4
1.5	A	T330A155(1)035AS	1	4
1.8	A	T330A185(1)035AS	1	4
2.2	A	T330A225(1)035AS	1	4
2.7	**A**	**T330A275(1)035AS**	**1**	**4**
50 VOLT RATING AT 85°C — 33 VOLT RATING AT 125°C				
0.10	A	T330A104(1)050AS	1	3
0.12	A	T330A124(1)050AS	1	3
0.15	A	T330A154(1)050AS	1	3
0.18	A	T330A184(1)050AS	1	3
0.22	A	T330A224(1)050AS	1	3
0.27	A	T330A274(1)050AS	1	3
0.33	A	T330A334(1)050AS	1	3
0.39	A	T330A394(1)050AS	1	3
0.47	A	T330A474(1)050AS	1	3
0.56	A	T330A564(1)050AS	1	3
0.68	A	T330A684(1)050AS	1	3
0.82	A	T330A824(1)050AS	1	4
1.0	A	T330A105(1)050AS	1	4
1.2	A	T330A125(1)050AS	1	4
1.5	A	T330A155(1)050AS	1	4

B, C & D CASES

CAPACITANCE µF	CASE SIZE	KEMET PART NUMBER	D.C. LEAKAGE µA@25°C	MAX. DISSIPATION FACTOR %@25°C, 120Hz
6 VOLT RATING AT 85°C — 4 VOLT RATING AT 125°C				
10.0	B	T330B106(1)006AS	1	6
12.0	B	T330B126(1)006AS	1	6
15.0	B	T330B156(1)006AS	1	6
18.0	B	T330B186(1)006AS	1	6
22.0	B	T330B226(1)006AS	1	6
27.0	C	T330C276(1)006AS	1	6
33.0	C	T330C336(1)006AS	1	6
39.0	C	T330C396(1)006AS	1	6
47.0	C	T330C476(1)006AS	2	6
56.0	C	T330C566(1)006AS	5	6
68.0	C	T330C686(1)006AS	5	6
82.0	D	T330D826(1)006AS	5	6
100.0	D	T330D107(1)006AS	5	6
120.0	D	T330D127(1)006AS	5	6
150.0	D	T330D157(1)006AS	5	6
180.0	D	T330D187(1)006AS	10	6
220.0	D	T330D227(1)006AS	10	8
10 VOLT RATING AT 85°C — 7 VOLT RATING AT 125°C				
5.6	B	T330B565(1)010AS	1	6
6.8	B	T330B685(1)010AS	1	6
8.2	B	T330B825(1)010AS	1	6
10.0	B	T330B106(1)010AS	1	6
12.0	B	T330B126(1)010AS	1	6
15.0	B	T330B156(1)010AS	1	6
18.0	C	T330C186(1)010AS	1	6
22.0	C	T330C226(1)010AS	2	6
27.0	C	T330C276(1)010AS	2	6

CAPACITANCE µF	CASE SIZE	KEMET PART NUMBER	D.C. LEAKAGE µA@25°C	MAX. DISSIPATION FACTOR %@25°C, 120Hz
10 VOLT RATING AT 85°C — 7 VOLT RATING AT 125°C				
33.0	C	T330C336(1)010AS	2	6
39.0	C	T330C396(1)010AS	5	6
47.0	D	T330D476(1)010AS	5	6
56.0	D	T330D566(1)010AS	5	6
68.0	D	T330D686(1)010AS	5	6
82.0	D	T330D826(1)010AS	5	6
100.0	D	T330D107(1)010AS	10	6
120.0	D	T330D127(1)010AS	10	6
150.0	D	T330D157(1)010AS	10	6
15 VOLT RATING AT 85°C — 10 VOLT RATING AT 125°C				
3.9	B	T330B395(1)015AS	1	6
4.7	B	T330B475(1)015AS	1	6
5.6	B	T330B565(1)015AS	1	6
6.8	B	T330B685(1)015AS	1	6
8.2	B	T330B825(1)015AS	1	6
10.0	C	T330C106(1)015AS	1	6
12.0	C	T330C126(1)015AS	1	6
15.0	C	T330C156(1)015AS	2	6
18.0	C	T330C186(1)015AS	5	6
22.0	C	T330C226(1)015AS	5	6
27.0	C	T330C276(1)015AS	5	6
33.0	C	T330C336(1)015AS	5	6
39.0	D	T330D396(1)015AS	10	6
47.0	D	T330D476(1)015AS	10	6
56.0	D	T330D566(1)015AS	10	6
68.0	D	T330D686(1)015AS	10	6
82.0	D	T330D826(1)015AS	10	6

(1) To complete Part Number insert Capacitance Tolerance Symbol in the 9th character, M — ±20%, K — ±10%, J — ±5%.
Bold face lines indicate popular part types and values.
Higher voltage and better capacitance tolerance product may be substituted for an order within the same case size at KEMET'S option.

B, C & D CASES (Cont'd)

CAPAC-ITANCE µF	CASE SIZE	KEMET PART NUMBER	D.C. LEAKAGE µA@25°C	MAX. DISSIPATION FACTOR %@25°C, 120Hz
25 VOLT RATING AT 85°C — 17 VOLT RATING AT 125°C				
2.7	B	T330B275(1)025AS	1	6
3.3	B	T330B335(1)025AS	1	6
3.9	B	T330B395(1)025AS	1	6
4.7	B	T330B475(1)025AS	1	6
5.6	C	T330C565(1)025AS	1	6
6.8	C	T330C685(1)025AS	1	6
8.2	C	T330C825(1)025AS	1	6
10.0	C	T330C106(1)025AS	1	6
12.0	C	T330C126(1)025AS	1	6
15.0	C	T330C156(1)025AS	2	6
18.0	D	T330D186(1)025AS	5	6
22.0	D	T330D226(1)025AS	5	6
27.0	D	T330D276(1)025AS	5	6
33.0	D	T330D336(1)025AS	5	6
39.0	D	T330D396(1)025AS	10	6
47.0	**D**	**T330D476(1)025AS**	**10**	**6**
35 VOLT RATING AT 85°C—23 VOLT RATING AT 125°C				
0.10	B	T330B104(1)035AS	1	6
0.12	B	T330B124(1)035AS	1	6
0.15	B	T330B154(1)035AS	1	6
0.18	B	T330B184(1)035AS	1	6
0.22	B	T330B224(1)035AS	1	6
0.27	B	T330B274(1)035AS	1	6
0.33	B	T330B334(1)035AS	1	6
0.39	B	T330B394(1)035AS	1	6
0.47	B	T330B474(1)035AS	1	6
0.56	B	T330B564(1)035AS	1	6
0.68	B	T330B684(1)035AS	1	6
0.82	B	T330B824(1)035AS	1	6
1.0	B	T330B105(1)035AS	1	6
1.2	B	T330B125(1)035AS	1	6
1.5	B	T330B155(1)035AS	1	6
1.8	B	T330B185(1)035AS	1	6
2.2	B	T330B225(1)035AS	1	6
2.7	B	T330B275(1)035AS	1	6
3.3	B	T330B335(1)035AS	1	6
3.9	C	T330C395(1)035AS	1	6
4.7	C	T330C475(1)035AS	1	6
5.6	C	T330C565(1)035AS	1	6

CAPAC-ITANCE µF	CASE SIZE	KEMET PART NUMBER	D.C. LEAKAGE µA@25°C	MAX. DISSIPATION FACTOR %@25°C, 120Hz
35 VOLT RATING AT 85°C — 23 VOLT RATING AT 125°C				
6.8	C	T330C685(1)035AS	2	6
8.2	C	T330C825(1)035AS	5	6
10.0	**C**	**T330C106(1)035AS**	**5**	**6**
12.0	D	T330D126(1)035AS	5	6
15.0	D	T330D156(1)035AS	5	6
18.0	D	T330D186(1)035AS	10	6
22.0	D	T330D226(1)035AS	10	6
27.0	D	T330D276(1)035AS	10	6
33.0	D	T330D336(1)035AS	10	6
50 VOLT RATING AT 85°C—33 VOLT RATING AT 125°C				
0.10	B	T330B104(1)050AS	1	6
0.12	B	T330B124(1)050AS	1	6
0.15	B	T330B154(1)050AS	1	6
0.18	B	T330B184(1)050AS	1	6
0.22	B	T330B224(1)050AS	1	6
0.27	B	T330B274(1)050AS	1	6
0.33	B	T330B334(1)050AS	1	6
0.39	B	T330B394(1)050AS	1	6
0.47	B	T330B474(1)050AS	1	6
0.56	B	T330B564(1)050AS	1	6
0.68	B	T330B684(1)050AS	1	6
0.82	B	T330B824(1)050AS	1	6
1.0	B	T330B105(1)050AS	1	6
1.2	B	T330B125(1)050AS	1	6
1.5	B	T330B155(1)050AS	1	6
1.8	B	T330B185(1)050AS	1	6
2.2	B	T330B225(1)050AS	1	6
2.7	C	T330C275(1)050AS	1	6
3.3	C	T330C335(1)050AS	2	6
3.9	C	T330C395(1)050AS	5	6
4.7	C	T330C475(1)050AS	5	6
5.6	C	T330C565(1)050AS	5	6
6.8	D	T330D685(1)050AS	5	6
8.2	D	T330D825(1)050AS	5	6
10.0	D	T330D106(1)050AS	5	6
12.0	D	T330D126(1)050AS	5	6
15.0	D	T330D156(1)050AS	10	6
18.0	D	T330D186(1)050AS	10	6

(1) To complete Part Number insert Capacitance Tolerance Symbol in the 9th character, M — ±20%, K — ±10%, J — ±5%.
Bold face lines indicate popular part types and values.
Higher voltage and better capacitance tolerance product may be substituted for an order within the same case size at KEMET'S option.

TANTALUM MOLDED / RADIAL

T340 SERIES - PRECISION MOLDED - RADIAL LEADS

Effective September 30, 2005, the KEMET T340 Series is RoHS compliant.

CAPACITOR OUTLINE DRAWINGS

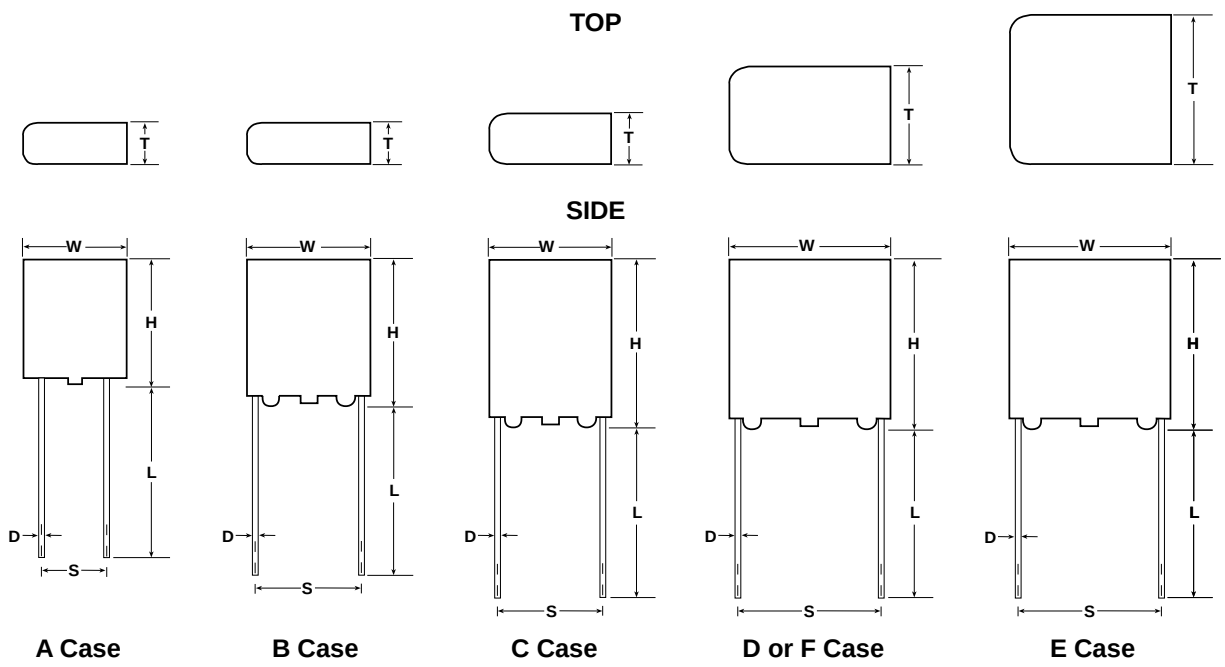

F case size is the same as D, but with .200" (5.0 mm) lead spacing. Specify T340F when ordering this spacing.

DIMENSIONS — INCHES & MILLIMETERS

CASE SIZE	H** (MAX)		W (MAX)		T (MAX)		LEAD SPACING S		LEAD LENGTH L		LEAD DIAMETER D	
	H		W		T							
	Inches	mm	Inches	mm	inches	mm	Inches ±.020	mm ±.5	Inches ±.078	mm ±2.0	Inches ±.001	mm ±.03
A	**.287**	7.3	**.185**	4.7	**.165**	4.2	**.100**	2.5	**.600**	15.0	**.020**	0.50
B	**.327**	8.3	**.283**	7.2	**.157**	4.0	**.200**	5.0	**.600**	15.0	**.020**	0.50
C	**.413**	10.5	**.287**	7.3	**.169**	4.3	**.200**	5.0	**.600**	15.0	**.020**	0.50
D	**.413**	10.5	**.484**	12.3	**.287**	7.3	**.400**	10.0	**.600**	15.0	**.025**	0.64
E	**.413**	10.5	**.484**	12.3	**.484**	12.3	**.400**	10.0	**.600**	15.0	**.025**	0.64
F	**.413**	10.5	**.484**	12.3	**.287**	7.3	**.200**	5.0	**.600**	15.0	**.025**	0.64

**Includes Standoff Height of .015 ± .005" (.38 ± .13 mm) for All Case Sizes.

ORDERING INFORMATION

T 340 A 105 M 035 A S*

TANTALUM

SERIES
Radial Lead
Precision Molded Polar
Solid Tantalum

CASE SIZE
A / B / C / D / E / F

PICOFARAD CODE
First two digits are significant figures.
Third digit is the number of zeros following.

LEAD MATERIAL
S — Standard (solder-coated copperweld)
T – 100% tin

FAILURE RATE LEVEL
A — Not Applicable

VOLTAGE RATING

CAPACITANCE TOLERANCE
M — ±20% — Std.
K — ±10%
J — ±5%
} Available on request

***Part Number Example: T340A105M035AS (14 digits – no spaces)**

MARKING INFORMATION

American

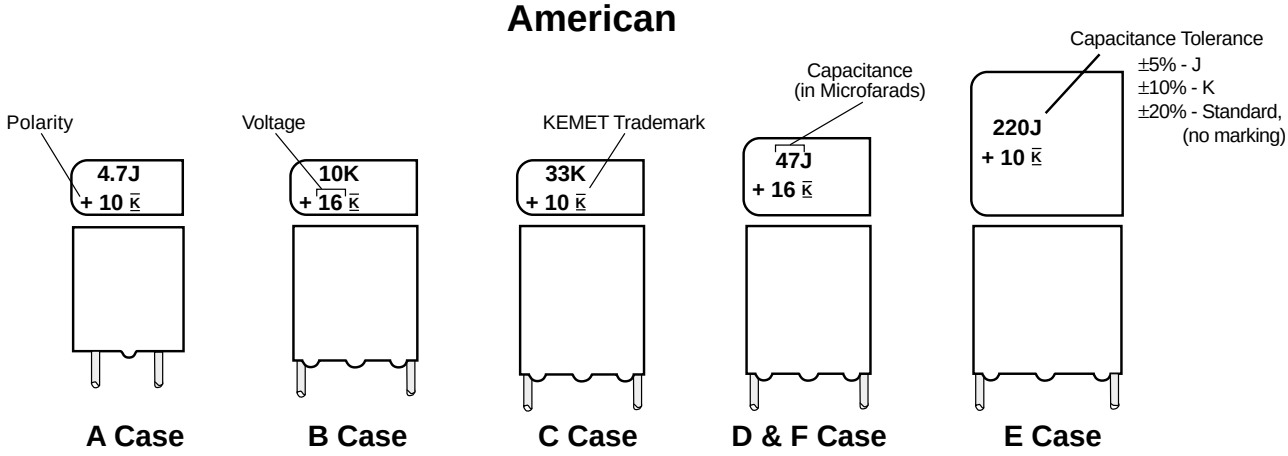

European

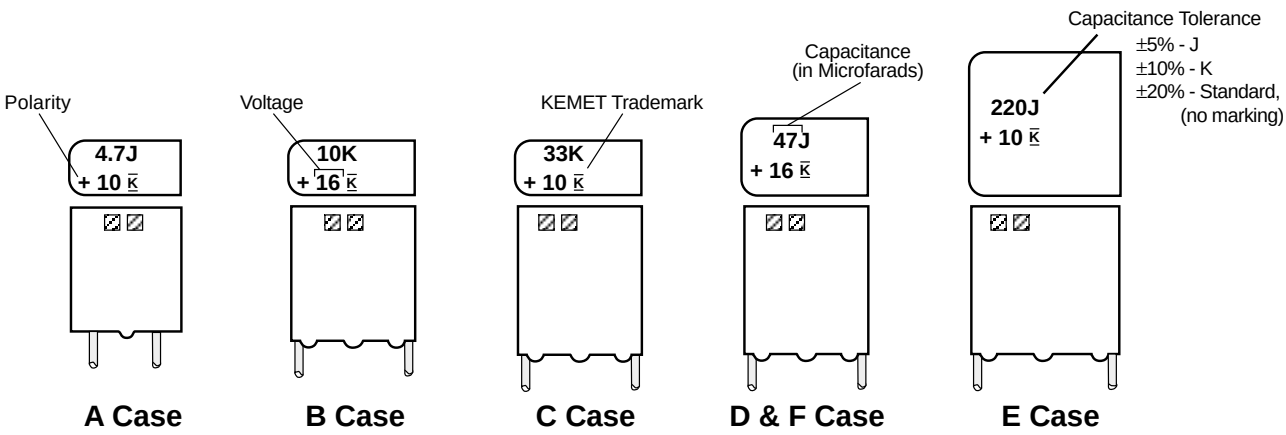

□ □ = DIN. Specification Date Code

Insert Date Code as follows:

□ 1st digit - represents year

L - 2000	Q- 2005
M - 2001	R - 2006
N - 2002	S - 2007
O - 2003	T - 2008
P - 2004	U - 2009

□ 2nd digit - represents month

1 - 9 for January - September
O for October
N for November
D for December

KEMET Electronics Corporation, P.O. Box 5928, Greenville, S.C. 29606 (864) 963-6300

RATINGS & PART NUMBER REFERENCE

CAPACI-ITANCE µF	CASE SIZE	KEMET PART NUMBER	MAX. DC LEAKAGE µA@25°C	MAX. DISSIPATION FACTOR %@25°C, 120 HZ	MAX. IMPEDANCE Ω@ 10 kHz
3 VOLT RATING AT 85°C — 2 VOLT AT 125°C					
10.0	A	T340A106(1)003AS	1.0	6	6.0
15.0	A	T340A156(1)003AS	1.0	6	3.2
33.0	B	T340B336(1)003AS	1.5	6	2.1
47.0	B	T340B476(1)003AS	3.0	6	1.8
68.0	C	T340C686(1)003AS	4.0	6	1.5
100.0	C	T340C107(1)003AS	5.0	6	1.2
6/6.3 VOLT RATING AT 85°C — 4 VOLT AT 125°C					
6.8	A	T340A685(1)006AS	1.0	6	6.0
10.0	B	T340B106(1)006AS	1.0	6	
12.0	B	T340B126(1)006AS	1.0	6	
15.0	B	T340B156(1)006AS	1.0	6	
18.0	B	T340B186(1)006AS	1.0	6	
22.0	B	T340B226(1)006AS	2.5	6	2.1
27.0	C	T340C276(1)006AS	2.5	6	
33.0	C	T340C336(1)006AS	2.5	6	
39.0	C	T340C396(1)006AS	2.5	6	
47.0	**C**	**T340C476(1)006AS**	**3.0**	**6**	**1.5**
56.0	C	T340C566(1)006AS	5.0	6	
68.0	C	T340C686(1)006AS	5.0	6	
82.0	D/F	T340(2)826(1)006AS	5.0	6	
100.0	D/F	T340(2)107(1)006AS	5.0	6	
120.0	D/F	T340(2)127(1)006AS	5.0	6	
150.0	D/F	T340(2)157(1)006AS	8.0	6	0.8
180.0	D/F	T340(2)187(1)006AS	10.0	6	
220.0	D/F	T340(2)227(1)006AS	10.0	6	
330.0	E	T340E337(1)006AS	10.0	8	0.5
10 VOLT RATING AT 85°C — 6 VOLT AT 125°C					
4.7	**A**	**T340A475(1)010AS**	**1.0**	**6**	**7.5**
5.6	B	T340B565(1)010AS	1.0	6	
6.8	B	T340B685(1)010AS	1.0	6	
8.2	B	T340B825(1)010AS	1.0	6	
10.0	B	T340B106(1)010AS	1.0	6	
12.0	B	T340B126(1)010AS	1.0	6	
15.0	B	T340B156(1)010AS	3.0	6	2.5
18.0	C	T340C186(1)010AS	3.0	6	
22.0	C	T340C226(1)010AS	3.0	6	
27.0	C	T340C276(1)010AS	3.0	6	
33.0	**C**	**T340C336(1)010AS**	**5.0**	**6**	**1.7**
39.0	C	T340C396(1)010AS	5.0	6	
47.0	D/F	T340(2)476(1)010AS	5.0	6	
56.0	D/F	T340(2)566(1)010AS	5.0	6	
68.0	D/F	T340(2)686(1)010AS	5.0	6	
82.0	D/F	T340(2)826(1)010AS	8.0	6	
100.0	**D/F**	**T340(2)107(1)010AS**	**10.0**	**6**	1.0
120.0	D/F	T340(2)127(1)010AS	10.0	6	
150.0	D/F	T340(2)157(1)010AS	10.0	6	
220.0	E	T340E227(1)010AS	10.0	6	0.5
15/16 VOLT RATING AT 85°C — 10 VOLT AT 125°C					
3.3	**A**	**T340A335(1)015AS**	**1.0**	**6**	**9.0**
3.9	B	T340B395(1)015AS	1.0	6	
4.7	B	T340B475(1)015AS	1.0	6	
5.6	B	T340B565(1)015AS	1.0	6	
6.8	B	T340B685(1)015AS	1.0	6	
8.2	B	T340B825(1)015AS	1.0	6	
10.0	**B**	**T340B106(1)015AS**	**3.0**	**6**	**3.2**

(1) To complete KEMET Part Number, insert M — ±20%, K — ±10%, or J — ±5% for capacitance tolerance as shown in T340 ordering information.
(2) To complete KEMET Part Number, insert letter "D" for 10.0 mm (.394) lead spacing or letter "F" for 5.0 mm (.197) lead spacing. See page 53 for outline drawings.
Bold face lines indicate popular part types and values.
Higher voltage and better capacitance tolerance product may be substituted for an order within the same case size at KEMET'S option.

RATINGS & PART NUMBER REFERENCE

CAPAC-ITANCE µF	CASE SIZE	KEMET PART NUMBER	MAX. DC LEAKAGE µA@25°C	MAX. DISSIPATION FACTOR %@25°C, 120 HZ	MAX IMPEDANCE Ω@ 10 kHz
15/16 VOLT RATING AT 85°C — 10 VOLT AT 125°C (Cont'd)					
12.0	C	T340C126(1)015AS	3.0	6	
15.0	C	T340C156(1)015AS	3.5	6	2.5
18.0	C	T340C186(1)015AS	4.0	6	
22.0	**C**	**T340C226(1)015AS**	**4.0**	**6**	**2.1**
27.0	C	T340C276(1)015AS	5.0	6	
33.0	C	T340C336(1)015AS	5.0	6	
39.0	D/F	T340(2)396(1)015AS	7.0	6	
47.0	**D/F**	T340(2)476(1)015AS	**7.0**	**6**	**1.3**
56.0	D/F	T340(2)566(1)015AS	8.0	6	
68.0	**D/F**	**T340(2)686(1)015AS**	**9.0**	**6**	**1.1**
82.0	D/F	T340(2)826(1)015AS	10.0	6	
100.0	E	T340E107(1)015AS	10.0	6	0.8
150.0	**E**	**T340E157(1)015AS**	**10.0**	**6**	**0.6**
20 VOLT RATING AT 85°C — 13 VOLT AT 125°C					
2.2	A	T340A225(1)020AS	1.0	6	12.0
3.3	B	T340B335(1)020AS	1.0	6	8.0
4.7	B	T340B475(1)020AS	1.5	6	5.5
6.8	B	T340B685(1)020AS	2.5	6	4.2
15.0	C	T340C156(1)020AS	5.0	6	2.5
47.0	D	T340D476(1)020AS	9.0	6	1.3
100.0	E	T340E107(1)020AS	10.0	6	0.8
25 VOLT RATING AT 85°C — 16 VOLT AT 125°C					
1.5	**A**	**T340A155(1)025AS**	**1.0**	**6**	**17.0**
2.7	B	T340B275(1)025AS	1.0	6	
3.3	B	T340B335(1)025AS	1.0	6	
3.9	B	T340B395(1)025AS	1.0	6	
4.7	B	T340B475(1)025AS	2.0	6	5.5
5.6	C	T340C565(1)025AS	2.0	6	
6.8	C	T340C685(1)025AS	3.0	6	4.2
8.2	C	T340C825(1)025AS	3.0	6	
10.0	**C**	**T340C106(1)025AS**	**3.5**	**6**	**3.0**
12.0	C	T340C126(1)025AS	3.5	6	
15.0	C	T340C156(1)025AS	4.0	6	
18.0	D/F	T340(2)186(1)025AS	5.0	6	
22.0	D/F	T340(2)226(1)025AS	5.5	6	2.0
27.0	D/F	T340(2)276(1)025AS	7.0	6	
33.0	**D/F**	**T340(2)336(1)025AS**	**8.0**	**6**	**1.5**
39.0	D/F	T340(2)396(1)025AS	10.0	6	
47.0	D/E/F	T340(2)476(1)025AS	10.0	6	1.3
68.0	E	T340E686(1)025AS	10.0	6	0.9
35 VOLT RATING AT 85°C — 23 VOLT AT 125°C					
0.1	A	T340A104(1)035AS	1.0	6	220.0
0.15	A	T340A154(1)035AS	1.0	6	150.0
0.22	A	T340A224(1)035AS	1.0	6	100.0
0.33	A	T340A334(1)035AS	1.0	6	75.0
0.47	A	T340A474(1)035AS	1.0	6	50.0
0.68	A	T340A684(1)035AS	1.0	6	36.0
1.0	**A**	**T340A105(1)035AS**	**1.0**	**6**	**25.0**
1.2	B	T340B125(1)035AS	1.0	6	15.0
1.5	B	T340B155(1)035AS	1.0	6	
1.8	B	T340B185(1)035AS	1.0	6	
2.2	**B**	**T340B225(1)035AS**	**1.0**	**6**	**11.0**
2.7	B	T340B275(1)035AS	1.0	6	
3.3	B/C	T340(2)335(1)035AS	1.0	6	7.5

(1) To complete KEMET Part Number, insert M — ±20%, K — ±10%, or J — ±5% for capacitance tolerance as shown in T340 ordering information.
(2) To complete KEMET Part Number, insert letter "C" for 5.0 mm (.197") lead spacing, "D" for 10.0 mm (.394") lead spacing, "E" for 10.0 mm (.394") lead spacing or "F" for 5.0 mm (.197") lead spacing. See page 53 for outline drawings.
Bold face lines indicate popular part types and values.
Higher voltage and better capacitance tolerance product may be substituted for an order within the same case size at KEMET'S option.

RATINGS & PART NUMBER REFERENCE

CAPACI-ITANCE µF	CASE SIZE	KEMET PART NUMBER	MAX. DC LEAKAGE µA@25°C	MAX. DISSIPATION FACTOR %@25°C, 120 HZ	MAX IMPEDANCE Ω@ 10 kHz
35 VOLT RATING AT 85°C — 23 VOLT AT 125°C (Cont'd)					
3.9	C	T340C395(1)035AS	1.0	6	
4.7	**C**	**T340C475(1)035AS**	**2.5**	**6**	**5.5**
5.6	C	T340C565(1)035AS	2.5	6	
6.8	**C**	**T340C685(1)035AS**	**3.0**	**6**	**4.2**
8.2	C	T340C825(1)035AS	4.0	6	
10.0	**C**	**T340(2)106(1)035AS**	**4.0**	**6**	**2.8**
12.0	D/F	T340(2)126(1)035AS	5.0	6	
15.0	D/F	T340(2)156(1)035AS	5.0	6	2.2
18.0	D/F	T340(2)186(1)035AS	8.0	6	
22.0	**D/F**	**T340(2)226(1)035AS**	**8.0**	**6**	**1.9**
27.0	D/F	T340(2)276(1)035AS	10.0	6	
33.0	D/E/F	T340(2)336(1)035AS	10.0	6	1.4
47.0	**E**	**T340E476(1)035AS**	**10.0**	**6**	**1.1**
40 VOLT RATING AT 85°C — 32 VOLT AT 100°C					
0.1	A	T340A104(1)040AS	1.0	6	200.0
0.15	A	T340A154(1)040AS	1.0	6	140.0
0.22	A	T340A224(1)040AS	1.0	6	95.0
0.33	A	T340A334(1)040AS	1.0	6	70.0
0.47	A	T340A474(1)040AS	1.0	6	46.0
0.68	A	T340A684(1)040AS	1.0	6	34.0
1.0	A	T340A105(1)040AS	1.0	6	23.0
1.5	B	T340B155(1)040AS	1.0	6	14.0
2.2	B	T340B225(1)040AS	1.7	6	10.0
3.3	C	T340C335(1)040AS	2.3	6	7.0
4.7	C	T340C475(1)040AS	3.0	6	5.0
6.8	C	T340C685(1)040AS	3.5	6	3.9
10.0	D	T340D106(1)040AS	4.5	6	2.6
15.0	D	T340D156(1)040AS	6.0	6	2.0
22.0	D	T340D226(1)040AS	9.0	6	1.7
33.0	E	T340E336(1)040AS	10.0	6	1.3
47.0	E	T340E476(1)040AS	10.0	6	1.0
50 VOLT RATING AT 85°C — 33 VOLT AT 125°C					
0.1	A	T340A104(1)050AS	1.0	6	220.0
0.15	A	T340A154(1)050AS	1.0	6	150.0
0.22	A	T340A224(1)050AS	1.0	6	100.0
0.33	A	T340A334(1)050AS	1.0	6	75.0
0.39	B	T340B394(1)050AS	1.0	6	
0.47	B	T340B474(1)050AS	1.0	6	50.0
0.56	B	T340B564(1)050AS	1.0	6	
0.68	B	T340B684(1)050AS	1.0	6	36.0
0.82	B	T340B824(1)050AS	1.0	6	
1.0	B	T340B105(1)050AS	1.0	6	25.0
1.2	B	T340B125(1)050AS	1.0	6	
1.5	B/C	T340(2)155(1)050AS	1.1	6	15.0
1.8	B	T340B185(1)050AS	1.1	6	
2.2	B/C	T340(2)225(1)050AS	1.5	6	11.0
2.7	C	T340C275(1)050AS	1.5	6	
3.3	C/D	T340(2)335(1)050AS	2.5	6	7.5
3.9	C	T340C395(1)050AS	3.0	6	
4.7	C/D	T340(2)475(1)050AS	3.5	6	5.5
5.6	C	T340C565(1)050AS	4.0	6	
6.8	D/F	T340(2)685(1)050AS	5.0	6	4.0
8.2	D/F	T340(2)825(1)050AS	6.0	6	
10.0	D/F	T340(2)106(1)050AS	7.0	6	2.8
12.0	D/F	T340(2)126(1)050AS	8.0	6	
15.0	D/F	T340(2)156(1)050AS	9.0	6	2.2
18.0	D/F	T340(2)186(1)050AS	10.0	6	
22.0	E	T340E226(1)050AS	10.0	6	1.7

(1) To complete KEMET Part Number, insert M — ±20%, K — ±10%, or J — ±5% for capacitance tolerance as shown in T340 ordering information.
(2) To complete KEMET Part Number, insert letter "C" for 5.0 mm (.197") lead spacing, "D" for 10.0 mm (.394") lead spacing, "E" for 10.0 mm (.394") lead spacing or letter "F" for 5.0 mm (.197") lead spacing. See page 53 for outline drawings.
Bold face lines indicate popular part types and values.
Higher voltage and better capacitance tolerance product may be substituted for an order within the same case size at KEMET'S option.

The KEMET Micron Series is available in a variety of case styles and sizes. They are designed to operate from -55°C to +85°C at full voltage and to +125°C with derating. Typical applications include use in bypass coupling, filtering, and timing circuits.

The KEMET Micron Series is qualified under MIL-PRF-49137/6 as military styles CX06 (T378 Series).

The KEMET T370 Series is encapsulated in a molded gold color epoxy. This encasement technique allows maximum utilization of circuit board real estate with precisely centered leads in a microminiature case.

These molded packages also provide significant improvements in overall dimensional consistency as well as lead wires precisely spaced to within .010 inches (.25mm).

With our new molded packaging design, these capacitors can now be marked using our laser printing technique. The KEMET laser marking system ensures legibility and permanency while offering a complete alphanumeric print format. Laser print meets all requirements of the Resistance to Solvents Test, method 215 of MIL-STD-202.

PERFORMANCE CHARACTERISTICS

- CAPACITANCE/VOLTAGE RANGE:
  T370 Series: 0.68-220µF, 3-35 Volts.
  T378 Series: 2.2-220µF, 3-35 Volts.

- CAPACITANCE TOLERANCE: Available in standard EIA nominal values with ±20% tolerance standard, +40% -20%, ±10% and ±5% are also available.

- DISSIPATION FACTOR: Maximum DF limits are shown in corresponding series part number listings on page 60. See Application Notes Section, page 76 for additional information.

- DC LEAKAGE CURRENT: Maximum leakage values at 25° are shown in part number listings, page 60. See Application Notes Section, page 76 for additional information.

- RATED VOLTAGE; WORKING VOLTAGE; SURGE VOLTAGE; REVERSE VOLTAGE: See Application Notes Section, pages 76 & 77 for description.

- IMPEDANCE and ESR: See Application Notes Section, pages 78 for description. Reference ESR values are listed in table below.

- AC RIPPLE VOLTAGE: Permissible AC ripple voltage is related to the ESR of the capacitor and the power dissipation capabilities of a particular case size. Thermal capacities for the various case sizes have been determined and are listed in Table below. For additional description see page 78.

T370 ESR (OHMS) at 100 kHz @ +25°C
(The ESR values provided below are for reference only. No warranty, as stated on page 3 and reincorporated here, is made as to the accuracy of these values for any particular T370 Series product.)

Cap. µF	6 Volt	10 Volt	15 Volt	20 Volt	25 Volt	35 Volt
0.68						10.0
1.00						8.0
1.50						6.0
2.20					6.0	5.0
3.30				5.5	5.0	4.0
4.70				4.5	4.0	3.0
6.80		6.0		3.6	3.1	2.5
10.0	6.0	5.0		2.9	2.5	2.0
15.0	5.0	3.7	2.5	2.3	2.0	1.6
22.0	3.7	2.7	2.0	1.8	1.5	1.3
33.0	3.0	2.1	1.6	1.4	1.2	
47.0	2.0	1.7	1.3	1.2		
68.0	1.8	1.3	1.0			
100.0	1.6	1.0				
150.0	0.9					

- ENVIRONMENTAL CONSIDERATIONS:

Case Size	Watts
C	.070
D	.080
E	.090
F	.100

Maximum Power Dissipation Capability @ 25°C

A. Shock Test: MIL-STD-202, Method 213 Condition 1.
B. Thermal Shock, MIL-STD-202, Method 107.
C. Moisture Resistance: MIL-STD-202, Method 106.
D. Solderability: MIL-STD-202, Method 208.

For additional Environmental Test Information see pages 80, 81 and 82.

- LEAD MATERIAL: Solder coated nickel per MIL-STD1266, type N32.

- LEAD TAPE and REEL: Reeling per specification RS-468. See pages 72 and 74 for additional information.

CAPACITOR OUTLINE DRAWING

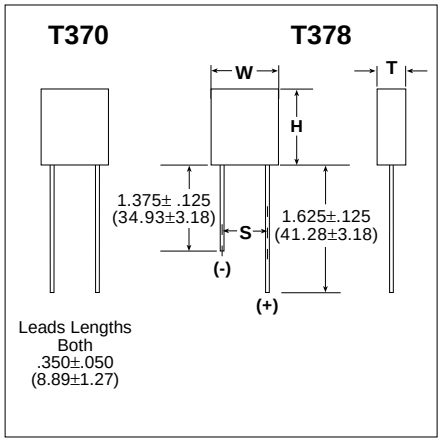

DIMENSIONS - INCHES (MILLIMETER)

CASE SIZE	H MAX.	W MAX.	T MAX.	S LEAD SPACING	LEAD DIAMETER ± .001 (.03)
*C	.225 (5.72)	.185 (4.70)	.075 (1.91)	.150 ± .010 (3.81 ± .25)	.016 (.41)
D	.290 (7.37)	.220 (5.59)	.110 (2.79)	.180 ± .010 (4.57 ± .25)	.016 (.41)
E	.310 (7.87)	.230 (5.84)	.130 (3.30)	.200 ± .010 (5.08 ± .25)	.016 (.41)
F	.475 (12.07)	.375 (9.53)	.150 (3.81)	.300 ± .010 (7.62 ± .25)	.016 (.41)

*C case size T370 style only.

CAPACITOR MARKING

INDUSTRIAL PRODUCT

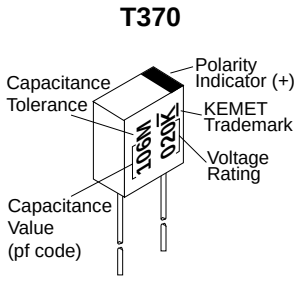

MILITARY PRODUCT

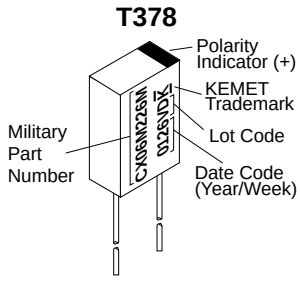

ORDERING INFORMATION
KEMET PART NUMBER

T 37X D 475 M 035 A S*

TANTALUM — T

SERIES — 37X
T370, T378

CASE SIZE — D

CAPACITANCE IN PICOFARAD CODE — 475
First two digits are significant figures.
Third figure is the number of zeros following.

CAPACITANCE TOLERANCE — M
M — ±20%, K — ±10%, J — ±5%
L — +40%, -20%

VOLTAGE RATING — 035

FAILURE RATE LEVEL — A
A — Not Applicable

LEAD MATERIAL — S*
S — Standard
(solder-coated nickel)

***Part Number Example: T370D475M035AS (14 digits – no spaces)**

MIL-PRF-49137/6 PART NUMBER
CX06(T378) STYLE

CX 06 D 335 K

TYPE — CX
Fixed, solid tantalum, polar, nonhermetically sealed capacitors.

STYLE — 06
06-T378 (radial leads)

VOLTAGE — D

Symbol	Rated (85°C) Volts, dc	Surge (85°C) Volts, dc
A	2	2.6
B	3	4
C	4	5
D	6	8
F	10	13
H	15	20
J	20	26
K	25	32
M	35	46

CAPACITANCE — 335
The nominal capacitance value, expressed in picofarads (pF), is identified by a three digit number. The first two digits represent significant figures and the last digit specifies the number of zeros to follow.

CAPACITANCE TOLERANCE — K

Symbol	Capacitance Tolerance Percent ±
K	10
M	20

RATINGS & PART NUMBER REFERENCE

CAPACITANCE µF	CASE SIZE	INDUSTRIAL PRODUCT T370 PART NO.	MILITARY PRODUCT CX06 PART NO.	MILITARY PRODUCT T378 PART NO.	DC LEAKAGE µA@25°C MAXIMUM	DISSIPATION FACTOR %@25°C 120HZ MAXIMUM
3 VOLT RATING AT 85°C—2.0 VOLT RATING AT 125°C						
220.0	F	T370F227(1)003AS	CX06B227(2)	T378F227(3)003AS	9.0	15
4 VOLT RATING AT 85°C—2.7 VOLT RATING AT 125°C						
15.0	C	T370C156(1)004AS			1.0	8
47.0	D	T370D476(1)004AS	CX06C476(2)	T378D476(3)004AS	2.0	8
68.0	E	T370E686(1)004AS	CX06C686(2)	T378E686(3)004AS	3.0	8
6 VOLT RATING AT 85°C—4.0 VOLT RATING AT 125°C						
10.0	C	T370C106(1)006AS			1.0	6
33.0	D	T370D336(1)006AS	CX06D336(2)	T378D336(3)006AS	2.0	6
47.0	E	T370E476(1)006AS	CX06D476(2)	T378E476(3)006AS	3.0	6
150.0	F	T370F157(1)006AS	CX06D157(2)	T378F157(3)006AS	9.0	10
10 VOLT RATING AT 85°C—7.0 VOLT RATING AT 125°C						
6.8	C	T370C685(1)010AS			1.0	6
22.0	D	T370D226(1)010AS	CX06F226(2)	T378D226(3)010AS	2.0	6
33.0	E	T370E336(1)010AS	CX06F336(2)	T378E336(3)010AS	3.0	6
100.0	F	T370F107(1)010AS	CX06F107(2)	T378F107(3)010AS	9.0	8
15 VOLT RATING AT 85°C—10 VOLT RATING AT 125°C						
15.0	D	T370D156(1)015AS	CX06H156(2)	T378D156(3)015AS	2.0	6
22.0	E	T370E226(1)015AS	CX06H226(2)	T378E226(3)015AS	3.0	6
68.0	F	T370F686(1)015AS	CX06H686(2)	T378F686(3)015AS	9.0	8
20 VOLT RATING AT 85°C—13 VOLT RATING AT 125°C						
3.3	C	T370C335(1)020AS			1.0	6
4.7	C	T370C475(1)020AS			1.0	6
10.0	D	T370D106(1)020AS	CX06J106(2)	T378D106(3)020AS	2.0	6
15.0	E	T370E156(1)020AS	CX06J156(2)	T378E156(3)020AS	3.0	6
47.0	F	T370F476(1)020AS	CX06J476(2)	T378F476(3)020AS	9.0	8
25 VOLT RATING AT 85°C—17 VOLT RATING AT 125°C						
2.2	C	T370C225(1)025AS			1.0	6
6.8	D	T370D685(1)025AS	CX06K685(2)	T378D685(3)025AS	2.0	6
10.0	E	T370E106(1)025AS	CX06K106(2)	T378E106(3)025AS	3.0	6
33.0	F	T370F336(1)025AS	CX06K336(2)	T378F336(3)025AS	9.0	6
35 VOLT RATING AT 85°C—23 VOLT RATING AT 125°C						
0.68	C	T370C684(1)035AS			1.0	6
1.0	C	T370C105(1)035AS			1.0	6
1.5	C	T370C155(1)035AS			1.0	6
2.2	D	T370D225(1)035AS	CX06M225(2)	T378D225(3)035AS	2.0	6
3.3	D	T370D335(1)035AS	CX06M335(2)	T378D335(3)035AS	2.0	6
4.7	D	T370D475(1)035AS	CX06M475(2)	T378D475(3)035AS	2.0	6
6.8	E	T370E685(1)035AS	CX06M685(2)	T378E685(3)035AS	3.0	6
10.0	F	T370F106(1)035AS	CX06M106(2)	T378F106(3)035AS	9.0	6
15.0	F	T370F156(1)035AS	CX06M156(2)	T378F156(3)035AS	9.0	6
22.0	F	T370F226(1)035AS	CX06M226(2)	T378F226(3)035AS	9.0	6

(1) To complete KEMET part number, insert capacitance tolerance symbol as follows: L = +40%, –20%; M = ±20%; K = ±10%; J = ±5%.
(2) To complete military part number, insert capacitance tolerance symbol as follows: M = ±20%; K = ±10%.
(3) To complete KEMET part number, insert capacitance tolerance symbol as follows: M = ±20%; K = ±10%.

PERFORMANCE CHARACTERISTICS

- CAPACITANCE/VOLTAGE RANGE:
  T35X/T39X: 0.1-680µF, 3-50 Volts.
  T36X: 0.1-330µF, 6-50 Volts.

- CAPACITANCE TOLERANCE: Available in standard EIA nominal values with ±20% and ±10% standard.

- DISSIPATION FACTOR: Maximum DF limits are shown in corresponding series part number listings. See Application Notes Section, page 76 for additional information.

- DC LEAKAGE CURRENT: Maximum leakage values at 25° are shown in part number listings, pages 63-65, 67, 68 and 70. See Application Notes Section, pages 76 & 77 for additional information.

- RATED VOLTAGE; WORKING VOLTAGE; SURGE VOLTAGE; REVERSE VOLTAGE: See Application Notes Section, pages 76 & 77 for description.

- IMPEDANCE and ESR: See Application Notes Section, page 77 & 78 for description. Reference ESR values are shown in table below.

Commercial T35X/T36X/T39X ESR (OHMS) at 100 kHz @ +25°C
(The ESR values provided below are for reference only. No warranty, as stated on page 3 and reincorporated here, is made as to the accuracy of these values for any particular T35X, T36X, T39X Series product.)

Cap. µF	6 Volt	10 Volt	16 Volt	20 Volt	25 Volt	35 Volt	50 Volt
0.10						26.0	26.0
0.15						21.0	21.0
0.22						17.0	17.0
0.33						15.0	15.0
0.47						13.0	13.0
0.68						10.0	10.0
1.00				10.0	10.0	8.0	8.0
1.50			10.0	9.0	8.0	6.0	5.0
2.20		13.0	8.0	7.0	6.0	5.0	3.5
3.30	13.0	10.0	6.0	5.5	5.0	4.0	3.0
4.70	10.0	8.0	5.0	4.5	4.0	3.0	2.5
6.80	8.0	6.0	4.0	3.6	3.1	2.5	2.0
10.0	6.0	5.0	3.2	2.9	2.5	2.0	1.6
15.0	5.0	3.7	2.5	2.3	2.0	1.6	1.2
22.0	3.7	2.7	2.0	1.8	1.5	1.3	1.0
33.0	3.0	2.1	1.6	1.4	1.2	1.0	
47.0	2.0	1.7	1.3	1.2	1.0	0.8	
68.0	1.8	1.3	1.0	0.9	0.8		
100.0	1.6	1.0	0.8	0.6			
150.0	0.9	0.8	0.6				
220.0	0.9	0.6					
330.0	0.7						

- AC RIPPLE VOLTAGE: Permissible AC ripple voltage is related to equivalent series resistance (ESR) and power dissipation capability. Maximum power dissipation for each case size is listed in Table below. For additional description see page 78.

Case Size	Power Dissipation (max.) @ 25°C (watts)
T35X, A	.040
T39X B	.050
C	.060
D	.065
E	.070
F	.080
G	.090
H	.100
J	.110
K	.120
L	.130
M	.140
T36X A	.050
B	.075
C	.090
D	.135

Maximum Power Dissipation Capability @ 25°C

- ENVIRONMENTAL CONSIDERATIONS:
  A. Shock Test: MIL-STD-202, Method 213.
  B. Thermal Shock, MIL-STD-202, Method 107, Condition A.
  C. Moisture Resistance: MIL-STD-202, Method 106.
  D. Solderability: MIL-STD-202, Method 208.
  For additional Environmental Test Information see pages 80, 81 and 82.

- LEAD MATERIAL: Effective June 30, 2005 the T35x, T368 and T39x Series will be available, as an option, with 100% Matte Tin (RoHS compliant) lead wire or Sn/Pb lead wire. Please see page 63 for part number ordering information. The T363 and T369 lead material will remain Sn/Pb solder coated steel core with a copper ply per MIL-STD-127 and at this time will not be available with a 100% Sn option.

- LEAD TAPE AND REEL: Reeling per specification RS-468. See pages 72 - 74 for additional information.

TANTALUM DIPPED / RADIAL - POLAR

T350, T351, T352, T353, T354, T355 & T356 SERIES "ULTRADIP II"

The KEMET 'UltraDip II' Capacitors offer the designer of quality instruments and entertainment systems the widely recognized advantages inherent in solid tantalum capacitors at competitive prices.

The 'UltraDip II' Series, miniature dipped solid tantalum capacitors, provide the designer with the advantage of compactness plus low leakage and low DF performance characteristics for filtering, bypassing, coupling, blocking and RC timing circuits. This series features a capacitance range from 0.1 to 680 microfarads at voltages from 3 to 50 VDC. 'UltraDip II' capacitors utilize the same sophisticated materials and processes which have advanced KEMET Electronics Corporation to the leadership position in solid tantalum capacitors.

The plastic case provides a tough barrier coating and maintains precision of lead wire spacing within ±0.015 inch. The gold color epoxy utilized permits Laser marking with outstanding permanency and legibility. All case sizes are printed with capacitance, voltage, polarity and vendor identification.

Solid tantalum devices exhibit no degradation failure mode during shelf storage and show a constantly decreasing failure rate (i.e., absence of wearout mechanism) during life tests.

The 'UltraDip II' Series provides self-insulating cases which are resistant to shock and vibration. These capacitors exhibit low DCL, ESR and Impedance and have excellent temperature stability.

Effective June 30, 2005 the T35x Series is RoHS compliant.

CAPACITOR OUTLINE DRAWINGS

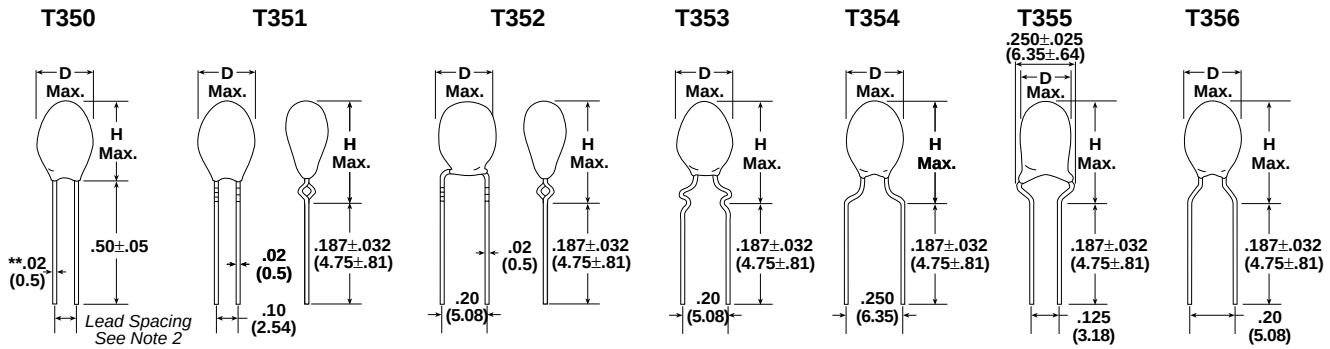

*Lead Tolerance = ± .015 (± .38 mm) ** All Lead Diameters = .02 ± .002 (0.5 ± .05 mm)

DIMENSIONS — INCHES (MILLIMETERS)

	All	T350	T351	T352	T353	T354	T355	T356
Case Size	D Max Diameter	H(1) Max Height	H(1) Max Height	H(1) Max Height	H(1) Max Height	H(1) Max Height	H(1) Max Height	H(1) Max Height
A	.175 (4.5)	.280 (7.1)	.380 (9.6)	.400 (10.2)	.400 (10.2)	.340 (8.6)	.340 (8.6)	.340 (8.6)
B	.175 (4.5)	.300 (7.6)	.390 (9.9)	.410 (10.4)	.410 (10.4)	.350 (8.9)	.350 (8.9)	.350 (8.9)
C	.196 (5.0)	.330 (8.4)	.420 (10.7)	.440 (11.2)	.440 (11.2)	.380 (9.6)	.380 (9.6)	.380 (9.6)
D	.196 (5.0)	.340 (8.6)	.430 (10.9)	.450 (11.4)	.450 (11.4)	.390 (9.9)	.390 (9.9)	.390 (9.9)
E	.216 (5.5)	.350 (8.9)	.440 (11.2)	.460 (11.7)	.460 (11.7)	.400 (10.2)	.400 (10.2)	.400 (10.2)
F	.236 (6.0)	.390 (9.9)	.480 (12.2)	.500 (12.7)	.500 (12.7)	.440 (11.2)	.440 (11.2)	.440 (11.2)
G	.250 (6.3)	.400 (10.2)	.490 (12.4)	.510 (13.0)	.510 (13.0)	.450 (11.4)	.450 (11.4)	.450 (11.4)
H	.300 (7.6)	.400 (10.2)	.500 (12.7)	.520 (13.2)	.520 (13.2)	.470 (11.9)	.470 (11.9)	.470 (11.9)
J(2)	.330 (8.4)	.500 (12.7)	Note 3	Note 3	.580 (14.7)	.550 (14.0)	Note 3	.550 (14.0)
K(2)	.350 (8.9)	.530 (13.5)			.630 (16.0)	.610 (15.5)		.610 (15.5)
L(2)	.350 (8.9)	.630 (16.0)			.730 (18.5)	.710 (18.1)		.710 (18.1)
M(2)	.400 (10.2)	.670 (17.0)			.760 (19.3)	.740 (18.8)		.740 (18.8)

NOTES: (1) All "H" Dimensions are from Capacitor seating plane to top of Capacitor.
(2) On T350 Series, case sizes A-H are supplied with .100"(2.54) lead spacing—case sizes J-M are supplied with .200"(5.08) lead spacing.
(3) These case sizes are not available for T351, T352 & T355 capacitors.

LEAD CONFIGURATION & SPACING CHART

CASE	LEAD CONFIGURATION	SERIES T350	T351	T352	T353	T354	T355	T356
A-H	.100	X	X					
	.125						X	
	.200			X	X			X
	.250					X		
	STRAIGHT LEAD	X						
	STAND OFF		X	X		X	X	X
	SNAP-IN				X			
J-M	.100		"NOT AVAILABLE"	"NOT AVAILABLE"			"NOT AVAILABLE"	
	.125							
	.200	X			X			X
	.250					X		
	STRAIGHT LEAD	X						
	STAND OFF					X		X
	SNAP-IN				X			

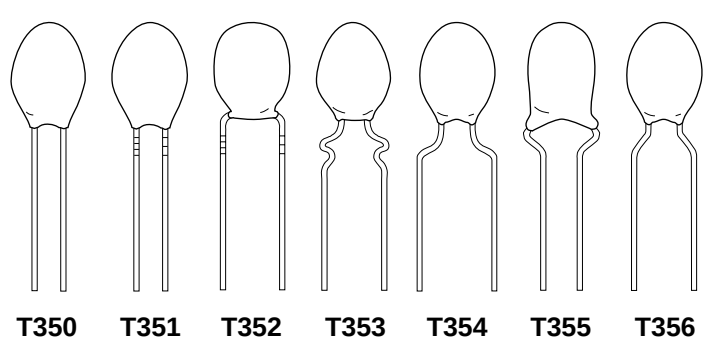

T35X & T36X ORDERING INFORMATION

T 3XX A 105 M 035 A S*

TANTALUM

SERIES
Insert appropriate number to replace letter "X" — 350, 351, 352, 353, 354, 355, 356, 363, 368, or 369.

CASE SIZE
A, B, C, D, E, F, G, H, J, K, L & M

PICOFARAD CODE
First two digits are significant figures. Third figure is the number of zeros following.

LEAD MATERIAL
S — Sn/Pb (tin/lead)
T – 100% Sn (tin)

FAILURE RATE LEVEL
A — Not Applicable

VOLTAGE RATING
For 6.3 Volts use 006

CAPACITANCE TOLERANCE
M — ±20%
K — ±10%
J — ±5% Available on special order.
*T363 & T369 capacitors available only with M & K tolerances

***Part Number Example: T350A105M035AS (14 digits – no spaces)**

T35X & T368 MARKING INFORMATION

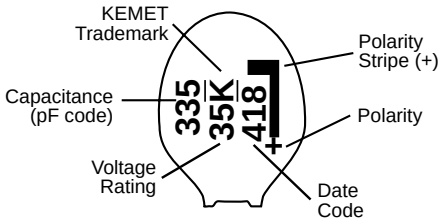

T35X RATINGS AND PART NUMBER REFERENCE

CAPACITANCE µF	CASE SIZE	KEMET PART NUMBER	D.C. LEAKAGE µA@25°C	MAX. DISSIPATION FACTOR %@25°C, 120Hz
3 VOLT RATING AT 85°C — 2 VOLT RATING AT 125°C				
4.7	A	T35(1)A475(3)003A(4)	0.5	5
5.6	A	T35(1)A565(3)003A(4)	0.5	5
6.8	A	T35(1)A685(3)003A(4)	0.5	5
8.2	A	T35(1)A825(3)003A(4)	0.5	6
10.0	A	T35(1)A106(3)003A(4)	0.5	6
12.0	B	T35(1)B126(3)003A(4)	0.5	6
15.0	B	T35(1)B156(3)003A(4)	0.5	6
18.0	C	T35(1)C186(3)003A(4)	0.5	6
22.0	C	T35(1)C226(3)003A(4)	0.5	6
27.0	D	T35(1)D276(3)003A(4)	0.6	6
33.0	D	T35(1)D336(3)003A(4)	0.8	6
39.0	E	T35(1)E396(3)003A(4)	0.9	6
47.0	E	T35(1)E476(3)003A(4)	1.1	6
56.0	F	T35(1)F566(3)003A(4)	1.3	6
68.0	F	T35(1)F686(3)003A(4)	1.6	6
82.0	G	T35(1)G826(3)003A(4)	2.0	8
100.0	G	T35(1)G107(3)003A(4)	2.4	8
120.0	H	T35(1)H127(3)003A(4)	2.9	8
150.0	H	T35(1)H157(3)003A(4)	3.6	8
180.0	J	T35(2)J187(3)003A(4)	4.3	8
220.0	J	T35(2)J227(3)003A(4)	5.3	8
270.0	K	T35(2)K277(3)003A(4)	6.5	8
330.0	K	T35(2)K337(3)003A(4)	7.9	8
390.0	L	T35(2)L397(3)003A(4)	9.4	9
470.0	L	T35(2)L477(3)003A(4)	10.0	9
560.0	M	T35(2)M567(3)003A(4)	10.0	9
680.0	M	T35(2)M687(3)003A(4)	10.0	9

CAPACITANCE µF	CASE SIZE	KEMET PART NUMBER	D.C. LEAKAGE µA@25°C	MAX. DISSIPATION FACTOR %@25°C, 120Hz
6.3 VOLT RATING AT 85°C — 4 VOLT RATING AT 125°C				
3.3	A	T35(1)A335(3)006A(4)	0.5	5
3.9	A	T35(1)A395(3)006A(4)	0.5	5
4.7	A	T35(1)A475(3)006A(4)	0.5	5
5.6	A	T35(1)A565(3)006A(4)	0.5	5
6.8	A	T35(1)A685(3)006A(4)	0.5	5
8.2	B	T35(1)B825(3)006A(4)	0.5	6
10.0	B	T35(1)B106(3)006A(4)	0.5	6
12.0	C	T35(1)C126(3)006A(4)	0.6	6
15.0	C	T35(1)C156(3)006A(4)	0.7	6
18.0	D	T35(1)D186(3)006A(4)	0.9	6
22.0	D	T35(1)D226(3)006A(4)	1.1	6
27.0	E	T35(1)E276(3)006A(4)	1.3	6
33.0	E	T35(1)E336(3)006A(4)	1.6	6
39.0	F	T35(1)F396(3)006A(4)	1.9	6
47.0	F	T35(1)F476(3)006A(4)	2.3	6
56.0	G	T35(1)G566(3)006A(4)	2.7	6
68.0	G	T35(1)G686(3)006A(4)	3.3	6
82.0	H	T35(1)H826(3)006A(4)	3.9	8
100.0	H	T35(1)H107(3)006A(4)	4.8	8
120.0	J	T35(2)J127(3)006A(4)	5.8	8
150.0	J	T35(2)J157(3)006A(4)	7.2	8
180.0	K	T35(2)K187(3)006A(4)	8.6	8
220.0	K	T35(2)K227(3)006A(4)	10.0	8
270.0	L	T35(2)L277(3)006A(4)	10.0	8
330.0	L	T35(2)L337(3)006A(4)	10.0	8

(1) To complete KEMET Part Number, insert Series Designation as follows: "0" = T350, "1" = T351, "2" = T352, "3" = T353, "4" = T354, "5" = T355, "6" = T356.
(2) To complete KEMET Part Number, insert only Series Designation as follows: "0" = T350, "3" = T353, "4" = T354, "6" = T356.
(3) To complete KEMET Part Number, insert Capacitance Tolerance Symbol: "M" = ±20%, "K" = ±10%.
(4) To complete KEMET Part Number, insert Lead Material designation : S = SnPb (tin/lead) and T = 100% Sn (tin).
NOTE: Higher voltage and better capacitance tolerance product may be substituted for an order within the same case size at KEMET's option.

T35X
RATINGS AND PART NUMBER REFERENCE

CAPAC-ITANCE µF	CASE SIZE	KEMET PART NUMBER	D.C. LEAKAGE µA@25°C	MAX. DISSI-PATION FACTOR %@25°C, 120Hz
10 VOLT RATING AT 85°C — 7 VOLT RATING AT 125°C				
2.2	A	T35(1)A225(3)010A(4)	0.5	5
2.7	A	T35(1)A275(3)010A(4)	0.5	5
3.3	A	T35(1)A335(3)010A(4)	0.5	5
3.9	A	T35(1)A395(3)010A(4)	0.5	5
4.7	**A**	**T35(1)A475(3)010A(4)**	**0.5**	**5**
5.6	B	T35(1)B565(3)010A(4)	0.5	5
6.8	B	T35(1)B685(3)010A(4)	0.5	5
8.2	C	T35(1)C825(3)010A(4)	0.7	6
10.0	C	T35(1)C106(3)010A(4)	0.8	6
12.0	E	T35(1)E126(3)010A(4)	1.0	6
15.0	E	T35(1)E156(3)010A(4)	1.2	6
18.0	E	T35(1)E186(3)010A(4)	1.4	6
22.0	E	T35(1)E226(3)010A(4)	1.8	6
27.0	F	T35(1)F276(3)010A(4)	2.2	6
33.0	**F**	**T35(1)F336(3)010A(4)**	**2.6**	**6**
39.0	G	T35(1)G396(3)010A(4)	3.1	6
47.0	H	T35(1)H476(3)010A(4)	3.8	6
56.0	H	T35(1)H566(3)010A(4)	4.5	6
68.0	H	T35(1)H686(3)010A(4)	5.4	6
82.0	J	T35(2)J826(3)010A(4)	6.6	8
100.0	**J**	**T35(2)J107(3)010A(4)**	**8.0**	**8**
120.0	K	T35(2)K127(3)010A(4)	9.6	8
150.0	K	T35(2)K157(3)010A(4)	10.0	8
180.0	L	T35(2)L187(3)010A(4)	10.0	8
220.0	L	T35(2)L227(3)010A(4)	10.0	8
16 VOLT RATING AT 85°C — 10 VOLT RATING AT 125°C				
1.5	A	T35(1)A155(3)016A(4)	0.5	5
1.8	A	T35(1)A185(3)016A(4)	0.5	5
2.2	**A**	**T35(1)A225(3)016A(4)**	**0.5**	**5**
2.7	A	T35(1)A275(3)016A(4)	0.5	5
3.3	A	T35(1)A335(3)016A(4)	0.5	5
3.9	B	T35(1)B395(3)016A(4)	0.5	5
4.7	**B**	**T35(1)B475(3)016A(4)**	**0.6**	**5**
5.6	C	T35(1)C565(3)016A(4)	0.7	5
6.8	C	T35(1)C685(3)016A(4)	0.9	5
8.2	E	T35(1)E825(3)016A(4)	1.0	6
10.0	**E**	**T35(1)E106(3)016A(4)**	**1.3**	**6**
12.0	E	T35(1)E126(3)016A(4)	1.5	6
15.0	E	T35(1)E156(3)016A(4)	1.8	6
18.0	F	T35(1)F186(3)016A(4)	2.2	6
22.0	**F**	**T35(1)F226(3)016A(4)**	**2.6**	**6**
27.0	H	T35(1)H276(3)016A(4)	3.2	6
33.0	H	T35(1)H336(3)016A(4)	4.0	6
39.0	J	T35(2)J396(3)016A(4)	4.7	6
47.0	**J**	**T35(2)J476(3)016A(4)**	**5.6**	**6**
56.0	K	T35(2)K566(3)016A(4)	6.8	6
68.0	**K**	**T35(2)K686(3)016A(4)**	**8.2**	**6**
82.0	L	T35(2)L826(3)016A(4)	9.8	8
100.0	**L**	**T35(2)L107(3)016A(4)**	**10.0**	**8**
120.0	M	T35(2)M127(3)016A(4)	10.0	8
150.0	M	T35(2)M157(3)016A(4)	10.0	8

CAPAC-ITANCE µF	CASE SIZE	KEMET PART NUMBER	D.C. LEAKAGE µA@25°C	MAX. DISSI-PATION FACTOR %@25°C, 120Hz
20 VOLT RATING AT 85°C — 13 VOLT RATING AT 125°C				
1.0	A	T35(1)A105(3)020A(4)	0.5	5
1.2	A	T35(1)A125(3)020A(4)	0.5	5
1.5	A	T35(1)A155(3)020A(4)	0.5	5
1.8	A	T35(1)A185(3)020A(4)	0.5	5
2.2	A	T35(1)A225(3)020A(4)	0.5	5
2.7	B	T35(1)B275(3)020A(4)	0.5	5
3.3	B	T35(1)B335(3)020A(4)	0.5	5
3.9	C	T35(1)C395(3)020A(4)	0.6	5
4.7	C	T35(1)C475(3)020A(4)	0.8	5
5.6	D	T35(1)D565(3)020A(4)	0.9	5
6.8	D	T35(1)D685(3)020A(4)	1.1	5
8.2	E	T35(1)E825(3)020A(4)	1.3	6
10.0	E	T35(1)E106(3)020A(4)	1.6	6
12.0	F	T35(1)F126(3)020A(4)	1.9	6
15.0	F	T35(1)F156(3)020A(4)	2.4	6
18.0	G	T35(1)G186(3)020A(4)	2.9	6
22.0	G	T35(1)G226(3)020A(4)	3.5	6
27.0	J	T35(2)J276(3)020A(4)	4.3	6
33.0	J	T35(2)J336(3)020A(4)	5.3	6
39.0	K	T35(2)K396(3)020A(4)	6.2	6
47.0	K	T35(2)K476(3)020A(4)	7.5	6
56.0	L	T35(2)L566(3)020A(4)	9.0	6
68.0	L	T35(2)L686(3)020A(4)	10.0	6
82.0	M	T35(2)M826(3)020A(4)	10.0	8
100.0	**M**	**T35(2)M107(3)020A(4)**	**10.0**	**8**
25 VOLT RATING AT 85°C — 16.5 VOLT RATING AT 125°C				
1.0	**A**	**T35(1)A105(3)025A(4)**	**0.5**	**5**
1.2	A	T35(1)A125(3)025A(4)	0.5	5
1.5	A	T35(1)A155(3)025A(4)	0.5	5
1.8	A	T35(1)A185(3)025A(4)	0.5	5
2.2	**B**	**T35(1)B225(3)025A(4)**	**0.5**	**5**
2.7	B	T35(1)B275(3)025A(4)	0.5	5
3.3	B	T35(1)B335(3)025A(4)	0.7	5
3.9	C	T35(1)C395(3)025A(4)	0.8	5
4.7	C	T35(1)C475(3)025A(4)	0.9	5
5.6	E	T35(1)E565(3)025A(4)	1.1	5
6.8	E	T35(1)E685(3)025A(4)	1.4	5
8.2	E	T35(1)E825(3)025A(4)	1.6	6
10.0	**E**	**T35(1)E106(3)025A(4)**	**2.0**	**6**
12.0	G	T35(1)G126(3)025A(4)	2.4	6
15.0	**G**	**T35(1)G156(3)025A(4)**	**3.0**	**6**
18.0	H	T35(1)H186(3)025A(4)	3.6	6
22.0	**H**	**T35(1)H226(3)025A(4)**	**4.4**	**6**
27.0	J	T35(2)J276(3)025A(4)	5.4	6
33.0	J	T35(2)J336(3)025A(4)	6.6	6
39.0	K	T35(2)K396(3)025A(4)	7.8	6
47.0	**K**	**T35(2)K476(3)025A(4)**	**9.4**	**6**
56.0	L	T35(2)L566(3)025A(4)	10.0	6
68.0	L	T35(2)L686(3)025A(4)	10.0	6

(1) To complete KEMET Part Number, insert Series Designation as follows: "0" = T350, "1" = T351, "2" = T352, "3" = T353, "4" = T354, "5" = T355, "6" = T356.
(2) To complete KEMET Part Number, insert only Series Designation as follows: "0" = T350, "3" = T353, "4" = T354, "6" = T356.
(3) To complete KEMET Part Number, insert Capacitance Tolerance Symbol: "M" = ±20%, "K" = ±10%.
(4) To complete KEMET Part Number, insert Lead Material Designation as follows: S = Sn/Pb (tin/lead) and T = 100% Sn (tin).
NOTE: Higher voltage and better capacitance tolerance product may be substituted for an order within the same case size at KEMET's option.

T35X

RATINGS AND PART NUMBER REFERENCE

CAPAC-ITANCE µF	CASE SIZE	KEMET PART NUMBER	D.C. LEAKAGE µA@25°C	MAX. DISSI-PATION FACTOR %@25°C, 120Hz
35 VOLT RATING AT 85°C — 23 VOLT RATING AT 125°C				
0.10	A	T35(1)A104(3)035A(4)	0.5	3
0.12	A	T35(1)A124(3)035A(4)	0.5	3
0.15	A	T35(1)A154(3)035A(4)	0.5	3
0.18	A	T35(1)A184(3)035A(4)	0.5	3
0.22	A	T35(1)A224(3)035A(4)	0.5	3
0.27	A	T35(1)A274(3)035A(4)	0.5	3
0.33	A	T35(1)A334(3)035A(4)	0.5	3
0.39	A	T35(1)A394(3)035A(4)	0.5	3
0.47	A	T35(1)A474(3)035A(4)	0.5	3
0.56	A	T35(1)A564(3)035A(4)	0.5	3
0.68	A	T35(1)A684(3)035A(4)	0.5	3
0.82	A	T35(1)A824(3)035A(4)	0.5	3
1.0	**A**	**T35(1)A105(3)035A(4)**	**0.5**	**3**
1.2	B	T35(1)B125(3)035A(4)	0.5	5
1.5	B	T35(1)B155(3)035A(4)	0.5	5
1.8	C	T35(1)C185(3)035A(4)	0.5	5
2.2	**C**	**T35(1)C225(3)035A(4)**	**0.6**	**5**
2.7	D	T35(1)D275(3)035A(4)	0.7	5
3.3	D	T35(1)D335(3)035A(4)	0.9	5
3.9	E	T35(1)E395(3)035A(4)	1.0	5
4.7	**E**	**T35(1)E475(3)035A(4)**	**1.3**	**5**
5.6	F	T35(1)F565(3)035A(4)	1.6	5
6.8	**F**	**T35(1)F685(3)035A(4)**	**1.9**	**5**
8.2	G	T35(1)G825(3)035A(4)	2.3	6
10.0	**G**	**T35(1)G106(3)035A(4)**	**2.8**	**6**
12.0	J	T35(2)J126(3)035A(4)	3.4	6
15.0	J	T35(2)J156(3)035A(4)	4.2	6
18.0	K	T35(2)K186(3)035A(4)	5.0	6
22.0	**K**	**T35(2)K226(3)035A(4)**	**6.2**	**6**
27.0	L	T35(2)L276(3)035A(4)	7.6	6
33.0	L	T35(2)L336(3)035A(4)	9.2	6
39.0	M	T35(2)M396(3)035A(4)	10.0	6
47.0	**M**	**T35(2)M476(3)035A(4)**	**10.0**	**6**

CAPAC-ITANCE µF	CASE SIZE	KEMET PART NUMBER	D.C. LEAKAGE µA@25°C	MAX. DISSI-PATION FACTOR %@25°C, 120Hz
50 VOLT RATING AT 85°C — 33 VOLT RATING AT 125°C				
0.10	A	T35(1)A104(3)050A(4)	0.5	3
0.12	A	T35(1)A124(3)050A(4)	0.5	3
0.15	A	T35(1)A154(3)050A(4)	0.5	3
0.18	A	T35(1)A184(3)050A(4)	0.5	3
0.22	A	T35(1)A224(3)050A(4)	0.5	3
0.27	A	T35(1)A274(3)050A(4)	0.5	3
0.33	A	T35(1)A334(3)050A(4)	0.5	3
0.39	B	T35(1)B394(3)050A(4)	0.5	3
0.47	B	T35(1)B474(3)050A(4)	0.5	3
0.56	B	T35(1)B564(3)050A(4)	0.5	3
0.68	B	T35(1)B684(3)050A(4)	0.5	3
0.82	B	T35(1)B824(3)050A(4)	0.5	3
1.0	**B**	**T35(1)B105(3)050A(4)**	**0.5**	**3**
1.2	D	T35(1)D125(3)050A(4)	0.5	5
1.5	E	T35(1)E155(3)050A(4)	0.6	5
1.8	E	T35(1)E185(3)050A(4)	0.7	5
2.2	E	T35(1)E225(3)050A(4)	0.9	5
2.7	F	T35(1)F275(3)050A(4)	1.1	5
3.3	F	T35(1)F335(3)050A(4)	1.3	5
3.9	G	T35(1)G395(3)050A(4)	1.6	5
4.7	G	T35(1)G475(3)050A(4)	1.9	5
5.6	H	T35(1)H565(3)050A(4)	2.2	5
6.8	**J**	**T35(2)J685(3)050A(4)**	**2.7**	**5**
8.2	J	T35(2)J825(3)050A(4)	3.3	6
10.0	**K**	**T35(2)K106(3)050A(4)**	**4.0**	**6**
12.0	K	T35(2)K126(3)050A(4)	4.8	6
15.0	L	T35(2)L156(3)050A(4)	6.0	6
18.0	L	T35(2)L186(3)050A(4)	7.2	6
22.0	M	T35(2)M226(3)050A(4)	8.8	6

(1) To complete KEMET Part Number, insert Series Designation as follows: "0" = T350, "1" = T351, "2" = T352, "3" = T353, "4" = T354, "5" = T355, "6" = T356.
(2) To complete KEMET Part Number, insert only Series Designation as follows: "0" = T350, "3" = T353, "4" = T354, "6" = T356.
(3) To complete KEMET Part Number, insert Capacitance Tolerance Symbol: "M" = ±20%, "K" = ±10%.
(4) To complete KEMET Part Number, insert Lead Material Designation as follows: S = Sn/Pb (tin/lead) and T = 100% Tin.
Note: Higher voltage and better capacitance tolerance product may be substituted for an order within the same case size at KEMET's option.

Product manufactured to the requirements of MIL-PRF-49137 satisfy all the performance characteristics of the UltraDip II. The performance characteristics meet or exceed the requirements of MIL-PRF-49137.

In addition to the standard process testing done on the UltraDip II, all product supplied to MIL-PRF-49137 is sampled on a lot by lot basis for Group A and Group B inspection to insure compliance. Product supplied per MIL-PRF-49137 also receives an additional post process burn-in for at least two (2) hours under accelerated voltage stress in excess of 125% of DC rated voltage. This post process burn-in is equivalent to 200 hours under rated conditions.

CAPACITOR OUTLINE DRAWINGS

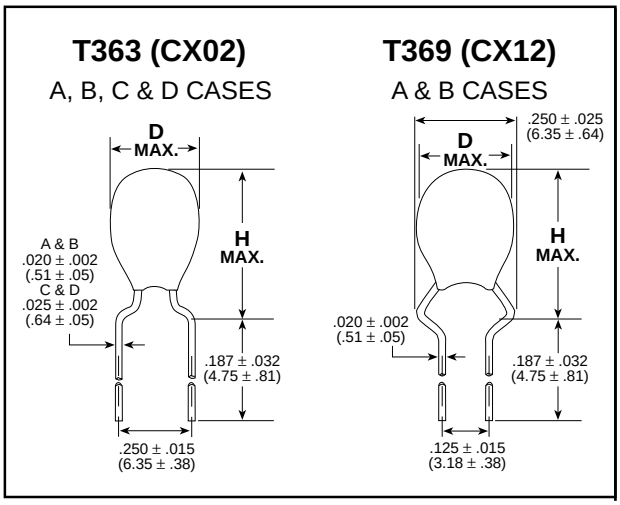

DIMENSIONS — INCHES & (MILLIMETERS)

T363 A-D CASE
T369 A&B CASE ONLY

CASE SIZE	D MAX	H MAX
A	0.175 (4.45)	0.350 (8.89)
B	0.250 (6.35)	0.450 (11.43)
C	0.350 (8.89)	0.610 (15.49)
D	0.400 (10.16)	0.740 (18.80)

MIL-PRF-49137 MARKING INFORMATION

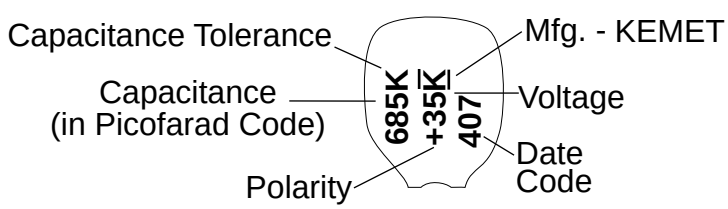

MIL-PRF-49137/2 ORDERING INFORMATION

CX 02 D 225 K

TYPE
Capacitors, Fixed, Solid Tantalum
Conformal Coated, Non-hermetically Sealed.

STYLE
02 (T363) A, B, C & D Cases
12 (T369) A & B Cases Only

VOLTAGE

Symbol	Rated (857C) Volts, dc	Surge (857C) Volts, dc
D	6	8
F	10	13
H	15	20
J	20	26
K	25	32
M	35	46
N	50	65

CAPACITANCE TOLERANCE

Symbol	Capacitance Tolerance
	Percent (±)
K	10
M	20

CAPACITANCE IN PICORARAD CODE
The nominal capacitance value, expressed in picofarads (pF), is identified by a three-digit number; the first two digits represent significant figures and the last digit specifies the number of zeros to follow.

*For KEMET Ordering Information, see page 63.

RATINGS & PART NUMBER REFERENCE

CAPACITANCE µF	CASE SIZE	CAPACITANCE TOLERANCE ±%	T363, T369 KEMET PART NUMBER	D.C. LEAKAGE µA@25°C	MAX. DISSIPATION FACTOR %@25°C, 120Hz	CX02 (T363) MILITARY PART NUMBER	CX12 (T369) MILITARY PART NUMBER
6 VOLT RATING AT 85°C							
6.8	A	10, 20	T36(1)A685(2)006AS	0.5	6	CX02D685(2)	CX12D685(2)
47.0	B	10, 20	T36(1)B476(2)006AS	2.3	6	CX02D476(2)	CX12D476(2)
68.0	B	10, 20	T36(1)B686(2)006AS	3.3	6	CX02D686(2)	CX12D686(2)
150.0	C	10, 20	T363C157(2)006AS	7.2	8	CX02D157(2)	
330.0	D	10, 20	T363D337(2)006AS	10.0	8	CX02D337(2)	
10 VOLT RATING AT 85°C							
4.7	A	10, 20	T36(1)A475(2)010AS	0.5	5	CX02F475(2)	CX12F475(2)
33.0	B	10, 20	T36(1)B336(2)010AS	2.6	6	CX02F336(2)	CX12F336(2)
100.0	C	10, 20	T363C107(2)010AS	8.0	8	CX02F107(2)	
220.0	D	10, 20	T363D227(2)010AS	10.0	8	CX02F227(2)	
15 VOLT RATING AT 85°C							
3.3	A	10, 20	T36(1)A335(2)015AS	0.5	5	CX02H335(2)	CX12H335(2)
22.0	B	10, 20	T36(1)B226(2)015AS	2.6	6	CX02H226(2)	CX12H226(2)
68.0	C	10, 20	T363C686(2)015AS	8.2	6	CX02H686(2)	
150.0	D	10, 20	T363D157(2)015AS	10.0	8	CX02H157(2)	
20 VOLT RATING AT 85°C							
2.2	A	10, 20	T36(1)A225(2)020AS	0.5	5	CX02J225(2)	CX12J225(2)
15.0	B	10, 20	T36(1)B156(2)020AS	2.4	6	CX02J156(2)	CX12J156(2)
47.0	C	10, 20	T363C476(2)020AS	7.5	6	CX02J476(2)	
100.0	D	10, 20	T363D107(2)020AS	10.0	8	CX02J107(2)	
25 VOLT RATING AT 85°C							
1.5	A	10, 20	T36(1)A155(2)025AS	0.5	5	CX02K155(2)	CX12K155(2)
10.0	B	10, 20	T36(1)B106(2)025AS	2.0	6	CX02K106(2)	CX12K106(2)
33.0	C	10, 20	T363C336(2)025AS	6.6	6	CX02K336(2)	
68.0	D	10, 20	T363D686(2)025AS	10.0	6	CX02K686(2)	
35 VOLT RATING AT 85°C							
6.8	B	10, 20	T36(1)B685(2)035AS	1.9	5	CX02M685(2)	CX12M685(2)
22.0	C	10, 20	T363C226(2)035AS	6.2	6	CX02M226(2)	
33.0	D	10, 20	T363D336(2)035AS	9.2	6	CX02M336(2)	
47.0	D	10, 20	T363D476(2)035AS	10.0	6	CX02M476(2)	
50 VOLT RATING AT 85°C							
0.1	A	10, 20	T36(1)A104(2)050AS	0.5	3	CX02N104(2)	CX12N104(2)
0.15	A	10, 20	T36(1)A154(2)050AS	0.5	3	CX02N154(2)	CX12N154(2)
0.22	A	10, 20	T36(1)A224(2)050AS	0.5	3	CX02N224(2)	CX12N224(2)
0.33	A	10, 20	T36(1)A334(2)050AS	0.5	3	CX02N334(2)	CX12N334(2)
0.47	A	10, 20	T36(1)A474(2)050AS	0.5	3	CX02N474(2)	CX12N474(2)
0.68	A	10, 20	T36(1)A684(2)050AS	0.5	3	CX02N684(2)	CX12N684(2)
1.0	A	10, 20	T36(1)A105(2)050AS	0.5	3	CX02N105(2)	CX12N105(2)
1.5	B	10, 20	T36(1)B155(2)050AS	0.6	5	CX02N155(2)	CX12N155(2)
2.2	B	10, 20	T36(1)B225(2)050AS	0.9	5	CX02N225(2)	CX12N225(2)
3.3	B	10, 20	T36(1)B335(2)050AS	1.3	5	CX02N335(2)	CX12N335(2)
4.7	B	10, 20	T36(1)B475(2)050AS	1.9	5	CX02N475(2)	CX12N475(2)
6.8	C	10, 20	T363C685(2)050AS	2.7	5	CX02N685(2)	
10.0	C	10, 20	T363C106(2)050AS	4.0	6	CX02N106(2)	
15.0	C	10, 20	T363C156(2)050AS	6.0	6	CX02N156(2)	
22.0	D	10, 20	T363D226(2)050AS	8.8	6	CX02N226(2)	

(1) To complete KEMET part number, insert Series Designation as follows: 3 - T363 (CX02); 9 - T369 (CX12)
(2) To complete KEMET or military part number, insert Capacitance Tolerance Symbol as follows:
M - ±20%, K - ±10%

T368 CAPACITOR OUTLINE DRAWING

C & D CASES

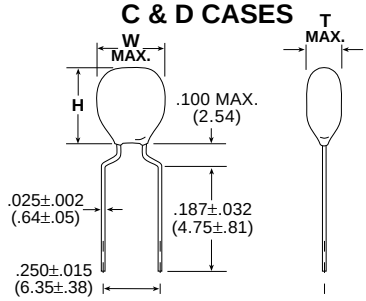

T368
DIMENSIONS — INCHES + (MILLIMETERS)

CASE SIZE	TMAX	WMAX	HMAX
C	0.250 (6.35)	0.40 (10.16)	0.42 (10.67)
D	0.250 (6.35)	0.460 (11.68)	0.52 (13.20)

T368
RATINGS AND PART NUMBER REFERENCE

CAPACITANCE µF	CASE SIZE	KEMET PART NUMBER	D.C. LEAKAGE µA@25°C	MAX. DISSIPATION FACTOR %@25°C, 120Hz
6 VOLT RATING AT 85°C				
82.0	C	T368C826(1)006A(2)	3.9	8
100.0	C	T368C107(1)006A(2)	4.8	8
120.0	C	T368C127(1)006A(2)	5.8	8
150.0	C	T368C157(1)006A(2)	7.2	8
180.0	D	T368D187(1)006A(2)	8.6	8
220.0	D	T368D227(1)006A(2)	10.0	8
270.0	D	T368D277(1)006A(2)	10.0	8
330.0	D	T368D337(1)006A(2)	10.0	8
10 VOLT RATING AT 85°C				
47.0	C	T368C476(1)010A(2)	3.8	6
56.0	C	T368C566(1)010A(2)	4.4	6
68.0	C	T368C686(1)010A(2)	5.4	6
82.0	C	T368C826(1)010A(2)	6.5	8
100.0	C	T368C107(1)010A(2)	8.0	8
120.0	D	T368D127(1)010A(2)	9.6	8
150.0	D	T368D157(1)010A(2)	10.0	8
180.0	D	T368D187(1)010A(2)	10.0	8
220.0	D	T368D227(1)010A(2)	10.0	8
15 VOLT RATING AT 85°C				
27.0	C	T368C276(1)015A(2)	3.2	6
33.0	C	T368C336(1)015A(2)	4.0	6
39.0	C	T368C396(1)015A(2)	4.7	6
47.0	C	T368C476(1)015A(2)	5.6	6
56.0	C	T368C566(1)015A(2)	6.8	6
68.0	C	T368C686(1)015A(2)	8.2	6
82.0	D	T368D826(1)015A(2)	9.8	8
100.0	D	T368D107(1)015A(2)	10.0	8
120.0	D	T368D127(1)015A(2)	10.0	8
150.0	D	T368D157(1)015A(2)	10.0	8
20 VOLT RATING AT 85°C				
18.0	C	T368C186(1)020A(2)	2.8	6
22.0	C	T368C226(1)020A(2)	3.5	6
27.0	C	T368C276(1)020A(2)	4.3	6
33.0	C	T368C336(1)020A(2)	5.3	6
39.0	C	T368C396(1)020A(2)	6.2	6
47.0	C	T368C476(1)020A(2)	7.5	6
56.0	D	T368D566(1)020A(2)	8.9	6
68.0	D	T368D686(1)020A(2)	10.0	6
82.0	D	T368D826(1)020A(2)	10.0	8
100.0	D	T368D107(1)020A(2)	10.0	8

CAPACITANCE µF	CASE SIZE	KEMET PART NUMBER	D.C. LEAKAGE µA@25°C	MAX. DISSIPATION FACTOR %@25°C, 120Hz
25 VOLT RATING AT 85°C				
12.0	C	T368C126(1)025A(2)	2.4	6
15.0	C	T368C156(1)025A(2)	3.0	6
18.0	C	T368C186(1)025A(2)	3.6	6
22.0	C	T368C226(1)025A(2)	4.4	6
27.0	C	T368C276(1)025A(2)	5.4	6
33.0	C	T368C336(1)025A(2)	6.6	6
39.0	D	T368D396(1)025A(2)	7.8	6
47.0	D	T368D476(1)025A(2)	9.4	6
56.0	D	T368D566(1)025A(2)	10.0	6
68.0	D	T368D686(1)025A(2)	10.0	6
35 VOLT RATING AT 85°C				
8.2	C	T368C825(1)035A(2)	2.3	6
10.0	C	T368C106(1)035A(2)	2.8	6
12.0	C	T368C126(1)035A(2)	3.3	6
15.0	C	T368C156(1)035A(2)	4.2	6
18.0	C	T368C186(1)035A(2)	5.0	6
22.0	C	T368C226(1)035A(2)	6.2	6
27.0	D	T368D276(1)035A(2)	7.5	6
33.0	D	T368D336(1)035A(2)	9.2	6
39.0	D	T368D396(1)035A(2)	10.0	6
47.0	D	T368D476(1)035A(2)	10.0	6
50 VOLT RATING AT 85°C				
5.6	C	T368C565(1)050A(2)	2.2	5
6.8	C	T368C685(1)050A(2)	2.7	5
8.2	C	T368C825(1)050A(2)	3.2	6
10.0	C	T368C106(1)050A(2)	4.0	6
12.0	C	T368C126(1)050A(2)	4.8	6
15.0	C	T368C156(1)050A(2)	6.0	6
18.0	D	T368D186(1)050A(2)	7.2	6
22.0	D	T368D226(1)050A(2)	8.8	6

(1) To complete KEMET part number, insert capacitance tolerance K– ±10%, M– ±20%, or J– ±5% (Available on special order).

(2) To complete KEMET part number, insert lead material designation: S = SnPb (tin/lead) and T = 100% Sn (tin).

*** For Ordering and Marking Information refer to page 63.**

Effective June 30, 2005 T368 Series is RoHS Compliant.

TANTALUM DIPPED / 3 LEADED

T396 & T398 SERIES "ULTRADIP III"

KEMET UltraDip III Capacitors offer the advantages of solid tantalum construction and a "fail-safe" insertion mechanism. The three-leaded design (the anode is in the center) enables operators to insert the capacitors into printed circuit boards correctly without having to visually determine polarity. This timesaving device also eliminates board damage that may result from incorrect insertion.

The UltraDip III Series features a capacitance range of 0.1 to 680 µF at 3 to 50 VDC. These miniature dipped solid tantalum capacitors are encased in a tough plastic barrier coating that maintains the precise lead wire spacing within ±0.015 inch. The gold color epoxy permits laser markings with outstanding permanency and legibility. All case sizes are printed with capacitance, voltage and vendor I.D.

The UltraDip III Series from KEMET Capacitors exhibit low DCL, ESR and Impedance and have excellent temperature stability. These capacitors may be ordered with precut leads (see drawing for lengths) or in KEMET Capacitor ARIS packaging (leads taped and on reels) for high speed automatic insertion equipment.

Effective June 30, 2005 the T396 and T398 Series are RoHS Compliant.

CAPACITOR OUTLINE DRAWING

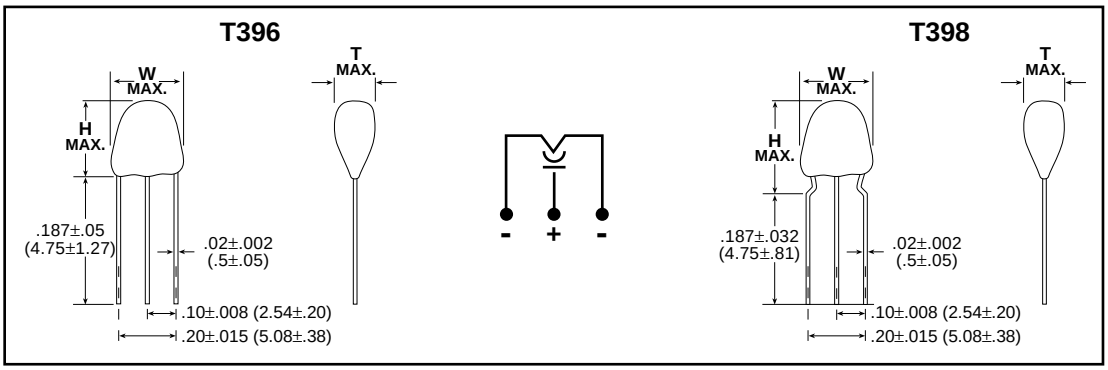

DIMENSIONS—INCHES & (MILLIMETERS)

		Both		T396	T398
Series	Case Size	W Width	T Thickness	H* Height	H* Height
T396/T398	A	.280 (7.1)	.190 (4.8)	.310 (7.9)	.355 (9.0)
T396/T398	B	.280 (7.1)	.190 (4.8)	.320 (8.1)	.365 (9.3)
T396/T398	C	.280 (7.1)	.200 (5.1)	.360 (9.1)	.390 (9.9)
T396/T398	D	.280 (7.1)	.200 (5.1)	.370 (9.4)	.390 (9.9)
T396/T398	E	.280 (7.1)	.230 (5.8)	.380 (9.7)	.415 (10.5)
T396/T398	F	.280 (7.1)	.240 (6.1)	.410 (10.4)	.430 (10.9)
T396/T398	G	.280 (7.1)	.250 (6.3)	.420 (10.7)	.440 (11.2)
T396/T398	H	.280 (7.1)	.270 (6.9)	.420 (10.7)	.440 (11.2)
T396/T398	J	.300 (7.6)	.300 (7.6)	.460 (11.7)	.480 (12.2)
T396/T398	K	.340 (8.6)	.340 (8.6)	.500 (12.7)	.500 (12.7)
T396/T398	L	.340 (8.6)	.340 (8.6)	.560 (14.2)	.580 (14.7)
T396/T398	M	.360 (9.1)	.360 (9.1)	.620 (15.7)	.620 (15.7)

*NOTE: "H" dimensions are from seating plane to top of capacitor.

CAPACITOR MARKING

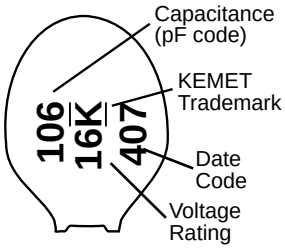

ORDERING INFORMATION

T 39X A 105 M 035 A S

TANTALUM

SERIES
T396 Straight leads
T398 Standoff leads

CASE SIZE
A, B, C, D, E, F, G, H, J, K, L & M

PICOFARAD CODE
First two digits are significant figures. Third figure is the number of zeros following.

LEAD MATERIAL
S — Sn/Pb (tin/lead)
T– 100% Sn (tin)

FAILURE RATE LEVEL
A — Not Applicable

VOLTAGE RATING
For 6.3 Volts use 006

CAPACITANCE TOLERANCE
M — ±20% (K — 10% Special Order Only)

RATINGS & PART NUMBER REFERENCE

CAPACITANCE µF	CASE SIZE	KEMET PART NUMBER	D.C. LEAKAGE µA@25°C	MAX. DISSIPATION FACTOR %@25°C, 120Hz
3 VOLT RATING AT 85°C — 2 VOLT RATING AT 125°C				
4.7	A	T39(1)A475(2)003A(3)	0.5	5
6.8	A	T39(1)A685(2)003A(3)	0.5	5
10.0	A	T39(1)A106(2)003A(3)	0.5	6
15.0	B	T39(1)B156(2)003A(3)	0.5	6
22.0	C	T39(1)C226(2)003A(3)	0.5	6
33.0	D	T39(1)D336(2)003A(3)	0.8	6
47.0	E	T39(1)E476(2)003A(3)	1.1	6
68.0	F	T39(1)F686(2)003A(3)	1.6	6
100.0	G	T39(1)G107(2)003A(3)	2.4	8
150.0	H	T39(1)H157(2)003A(3)	3.6	8
220.0	J	T39(1)J227(2)003A(3)	5.3	8
330.0	K	T39(1)K337(2)003A(3)	7.9	8
470.0	L	T39(1)L477(2)003A(3)	10.0	9
680.0	M	T39(1)M687(2)003A(3)	10.0	9
10 VOLT RATING AT 85°C — 7 VOLT RATING AT 125°C				
2.2	A	T39(1)A225(2)010A(3)	0.5	5
3.3	A	T39(1)A335(2)010A(3)	0.5	5
4.7	A	T39(1)A475(2)010A(3)	0.5	5
6.8	B	T39(1)B685(2)010A(3)	0.5	5
10.0	C	T39(1)C106(2)010A(3)	0.8	6
15.0	E	T39(1)E156(2)010A(3)	1.2	6
22.0	E	T39(1)E226(2)010A(3)	1.8	6
33.0	F	T39(1)F336(2)010A(3)	2.6	6
47.0	H	T39(1)H476(2)010A(3)	3.8	6
68.0	H	T39(1)H686(2)010A(3)	5.4	6
100.0	J	T39(1)J107(2)010A(3)	8.0	8
150.0	K	T39(1)K157(2)010A(3)	10.0	8
220.0	I	T39(1)L227(2)010A(3)	10.0	8
20 VOLT RATING AT 85°C — 13 VOLT RATING AT 125°C				
1.0	A	T39(1)A105(2)020A(3)	0.5	3
1.5	A	T39(1)A155(2)020A(3)	0.5	5
2.2	A	T39(1)A225(2)020A(3)	0.5	5
3.3	B	T39(1)B335(2)020A(3)	0.5	5
4.7	C	T39(1)C475(2)020A(3)	0.8	5
6.8	D	T39(1)D685(2)020A(3)	1.1	5
10.0	E	T39(1)E106(2)020A(3)	1.6	6
15.0	F	T39(1)F156(2)020A(3)	2.4	6
22.0	G	T39(1)G226(2)020A(3)	3.5	6
33.0	J	T39(1)J336(2)020A(3)	5.3	6
47.0	K	T39(1)K476(2)020A(3)	7.5	6
68.0	L	T39(1)L686(2)020A(3)	10.0	6
100.0	M	T39(1)M107(2)020A(3)	10.0	8
35 VOLT RATING AT 85°C — 23 VOLT RATING AT 125°C				
0.10	A	T39(1)A104(2)035A(3)	0.5	3
0.15	A	T39(1)A154(2)035A(3)	0.5	3
0.22	A	T39(1)A224(2)035A(3)	0.5	3
0.33	A	T39(1)A334(2)035A(3)	0.5	3
0.47	A	T39(1)A474(2)035A(3)	0.5	3
0.68	A	T39(1)A684(2)035A(3)	0.5	3
1.0	A	T39(1)A105(2)035A(3)	0.5	3
1.5	B	T39(1)B155(2)035A(3)	0.5	5
2.2	C	T39(1)C225(2)035A(3)	0.6	5
3.3	D	T39(1)D335(2)035A(3)	0.9	5
4.7	E	T39(1)E475(2)035A(3)	1.3	5
6.8	F	T39(1)F685(2)035A(3)	1.9	5
10.0	G	T39(1)G106(2)035A(3)	2.8	6
15.0	J	T39(1)J156(2)035A(3)	4.2	6
22.0	K	T39(1)K226(2)035A(3)	6.2	6
33.0	L	T39(1)L336(2)035A(3)	9.2	6
47.0	M	T39(1)M476(2)035A(3)	10.0	6

CAPACITANCE µF	CASE SIZE	KEMET PART NUMBER	D.C. LEAKAGE µA@25°C	MAX. DISSIPATION FACTOR %@25°C, 120Hz
6.3 VOLT RATING AT 85°C — 4 VOLT RATING AT 125°C				
3.3	A	T39(1)A335(2)006A(3)	0.5	5
4.7	A	T39(1)A475(2)006A(3)	0.5	5
6.8	A	T39(1)A685(2)006A(3)	0.5	5
10.0	B	T39(1)B106(2)006A(3)	0.5	6
15.0	C	T39(1)C156(2)006A(3)	0.7	6
22.0	D	T39(1)D226(2)006A(3)	1.1	6
33.0	E	T39(1)E336(2)006A(3)	1.6	6
47.0	F	T39(1)F476(2)006A(3)	2.3	6
68.0	G	T39(1)G686(2)006A(3)	3.3	6
100.0	H	T39(1)H107(2)006A(3)	4.8	8
150.0	J	T39(1)J157(2)006A(3)	7.2	8
220.0	K	T39(1)K227(2)006A(3)	10.0	8
330.0	L	T39(1)L337(2)006A(3)	10.0	8
16 VOLT RATING AT 85°C — 10 VOLT RATING AT 125°C				
1.5	A	T39(1)A155(2)016A(3)	0.5	5
2.2	A	T39(1)A225(2)016A(3)	0.5	5
3.3	A	T39(1)A335(2)016A(3)	0.5	5
4.7	B	T39(1)B475(2)016A(3)	0.6	5
6.8	C	T39(1)C685(2)016A(3)	0.9	5
10.0	E	T39(1)E106(2)016A(3)	1.3	6
15.0	E	T39(1)E156(2)016A(3)	1.8	6
22.0	F	T39(1)F226(2)016A(3)	2.6	6
33.0	H	T39(1)H336(2)016A(3)	4.0	6
47.0	J	T39(1)J476(2)016A(3)	5.6	6
68.0	K	T39(1)K686(2)016A(3)	8.2	6
100.0	L	T39(1)L107(2)016A(3)	10.0	8
150.0	M	T39(1)M157(2)016A(3)	10.0	8
25 VOLT RATING AT 85°C — 16.5 VOLT RATING AT 125°C				
1.0	A	T39(1)A105(2)025A(3)	0.5	3
1.5	A	T39(1)A155(2)025A(3)	0.5	5
2.2	B	T39(1)B225(2)025A(3)	0.5	5
3.3	B	T39(1)B335(2)025A(3)	0.7	5
4.7	C	T39(1)C475(2)025A(3)	0.9	5
6.8	E	T39(1)E685(2)025A(3)	1.4	5
10.0	E	T39(1)E106(2)025A(3)	2.0	6
15.0	G	T39(1)G156(2)025A(3)	3.0	6
22.0	H	T39(1)H226(2)025A(3)	4.4	6
33.0	J	T39(1)J336(2)025A(3)	6.6	6
47.0	K	T39(1)K476(2)025A(3)	9.4	6
68.0	L	T39(1)L686(2)025A(3)	10.0	6
50 VOLT RATING AT 85°C — 33 VOLT RATING AT 125°C				
0.10	A	T39(1)A104(2)050A(3)	0.5	3
0.15	A	T39(1)A154(2)050A(3)	0.5	3
0.22	A	T39(1)A224(2)050A(3)	0.5	3
0.33	A	T39(1)A334(2)050A(3)	0.5	3
0.47	B	T39(1)B474(2)050A(3)	0.5	3
0.68	B	T39(1)B684(2)050A(3)	0.5	3
1.0	B	T39(1)B105(2)050A(3)	0.5	3
1.5	E	T39(1)E155(2)050A(3)	0.6	5
2.2	E	T39(1)E225(2)050A(3)	0.9	5
3.3	F	T39(1)F335(2)050A(3)	1.3	5
4.7	G	T39(1)G475(2)050A(3)	1.9	5
6.8	J	T39(1)J685(2)050A(3)	2.7	5
10.0	K	T39(1)K106(2)050A(3)	4.0	6
15.0	L	T39(1)L156(2)050A(3)	6.0	6
22.0	M	T39(1)M226(2)050A(3)	8.8	6

(1) To complete KEMET Part Number, insert Series Designation as follows: "6" = T396, "8" = T398.
(2) To complete KEMET Part Number, insert Capacitance Tolerance Symbol as follows: "M" = ±20%, "K" = ±10%.
(3) To complete KEMET Part Number, insert Lead Material Designation: S = SnPb (tin/lead) and T = 100% Sn (tin).

NOTE: Higher voltage/tigher tolerance products may be shipped, at KEMET's option, within the same case size.

KEMET Electronics Corporation, P.O. Box 5928, Greenville, S.C. 29606 (864) 963-6300

Tantalum Axial
Lead Tape and Reel Packaging

KEMET offers standard reeling of Solid Tantalum Capacitors for automatic insertion or lead forming machines per EIA Specification RS-296E.

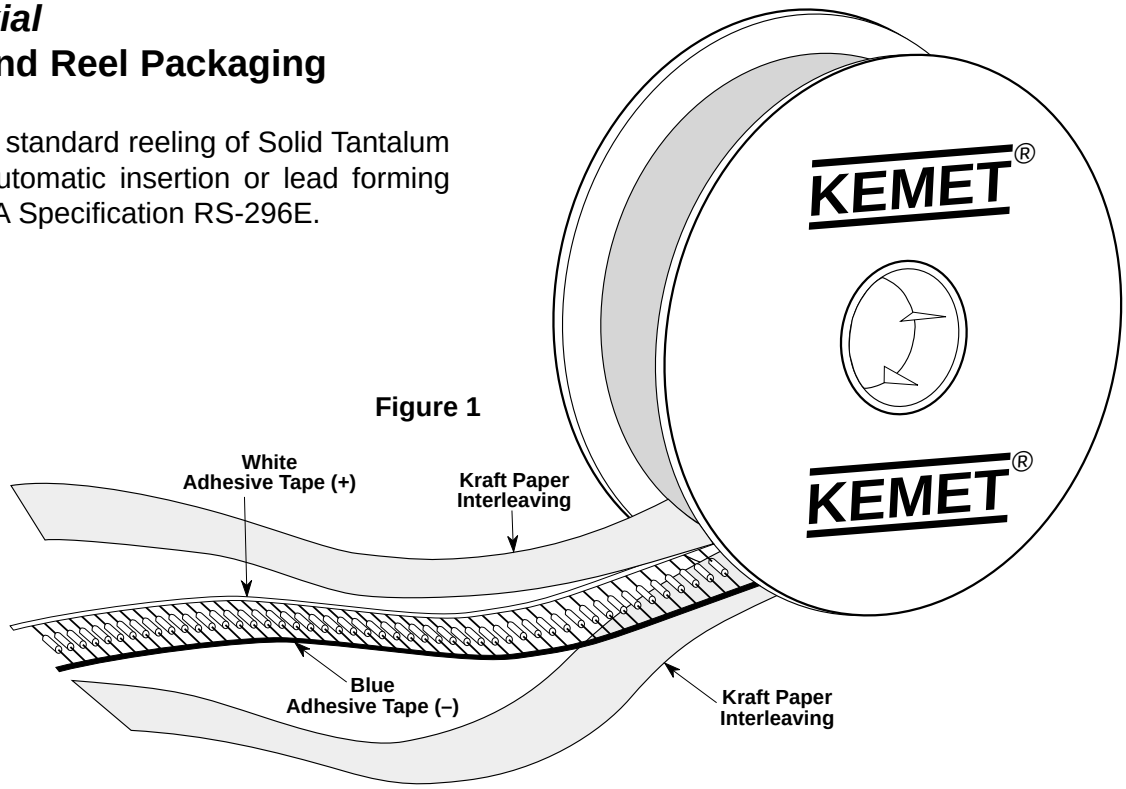

Figure 1

Figure 2

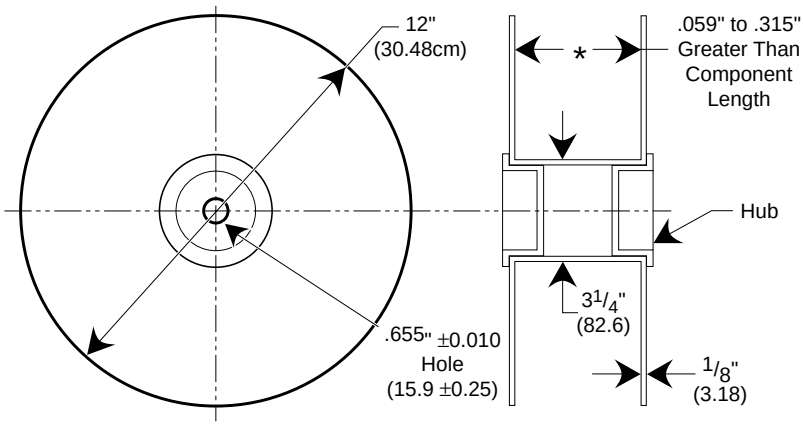

Figure 3

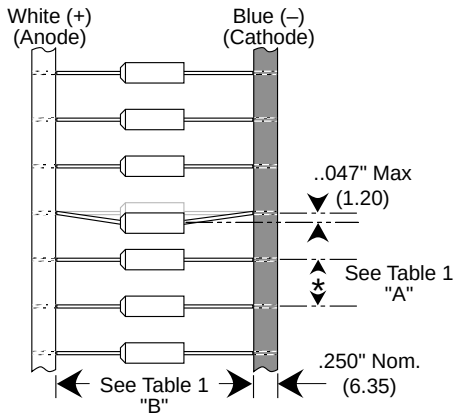

Table 1 **Dimensions in Inches & (Millimeters)**

COMPONENT BODY DIAMETER	COMPONENT PITCH "A"	INSIDE TAPE SPACING "B" ±1.5mm (0.059")		
	0.020" or (±0.5mm)	I	II	III
0" (0mm) to 0.197" (5mm)	0.200" or (5mm)	2.062"	2.500"	2.874"
0.197" (5.01mm) to 0.394" (10mm)	0.400" or (10mm)	(52.4mm)	(63.5mm)	(73mm)

Capacitors are reeled so that positive leads are oriented as shown in Figure 3. Kraft paper (50lb. test minimum) is inserted between the layers of capacitors wound on reels for component pitch ≤0.200" sizes and corrugated paper (70 lb. test minimum), single faced is inserted for component pitch ≥0.400" sizes. Capacitor lead length may extend only a maximum of .031" (0.8 mm) beyond the tape's edges. Capacitors are centered in a row between the two tapes and will deviate only ±0.031" (0.79 mm) from the row center. Figures 1 and 2 show the KEMET standard chipboard tape reel. A minimum of 36" (91.5 cm) leader tape is provided at each end of the reeled capacitors. Universal splicing clips are used to connect the tape. Standard reel quantities are shown on page 73.

PACKAGING INFORMATION

KEMET offers Solid Tantalum Capacitors fully compatible for use with automatic insertion machines for radial-lead components. Aris Reeling meets all requirements of EIA Standard RS-468. KEMET capacitors are wound on a precision made ARIS Reel Package. ARIS Ammo Package is also available.

Tantalum Dipped Radial – ARIS Specification (Automatic Radial Insertion System)

Tantalum Dipped Tape and Reel Dimensions in Millimeters & (Inches)

Dimension	Symbol	Nominal mm (inch)	Tolerance mm (inch)
Body Height (1)	A	17.0 (0.67)	Maximum
Body Width (1)	A_1	10.2 (0.40)	Maximum
Sprocket Hole Diameter	D_0	4.0 (.157)	± 0.3 (±.012)
Lead Diameter	d	0.51 or 0.64 (.020) (.025)	± 0.05 (.002)
Lead Center (4)	F	See Note Below	
Component Base to Tape Center (4)	H	C-7301 C-7303 16.0 (.630) 18.0 (.709)	C-7301 C-7303 ±0.5 (±.020) Minimum
Lead Standoff Height	H_0	C-7301 C-7303 16.0 (.630) 18.0 (.709)	C-7301 C-7303 ±0.5 (±.020) Minimum
Component Height Above Tape Center	H_1	32.25 (1.270)	Maximum
Component Alignment Front to Rear	Δ H	0	1.0 (.039)
Cut Out Length	L	11.0 (.433)	Maximum
Lead Protrusion	L_1	1.0 (.039)	Maximum

Dimension	Symbol	Nominal mm (inch)	Tolerance mm (inch)
Component Pitch (5)	P	12.7 (.500)	± 1.0 (± .039)
Sprocket Hole Pitch (2)	P_0	12.7 (.500)	± 0.3 (±.012)
Sprocket Hole Center to Lead Center (3) (4)	P_1	See Note Below	± 0.7 (±.028)
Sprocket Hole Center to Component (5) Center	P_2	See Note Below	
Body Thickness	T_0	10.2 (.400)	Maximum
Total Tape Thickness	T	0.7 (0.28)	± .02 (.008)
Carrier Tape Width	W	18.0 (.709)	+ 1.0/-0.5 (+.039/-.020)
Hold-Down Tape Width	W_0	15mm or 6mm (.561) (.236)	+ 1.0/-0.8 (+.039/-.031)
Sprocket Hole Location	W_1	9.0 (.354)	+.075/-0.5 (+.030/-.020)
Hold-Down Tape Location	W_2	12mm (.472)	Maximum

Notes: (1) See page 62 for T35X and page 69 for T39X specific dimensions.
(2) Cumulative pitch error ± 1.0mm (.039) maximum in 20 consecutive sprocket hole locations.
(3) Measured at bottom of standoff.
(4) P_1 and F measured at egress from carrier tape.
(5) P and P_2 measured at egress from carrier tape.

On polar devices, the positive (+) lead exits from container first.
* Lead spacings are 2.5mm (.098") center-to-center (T350 A-H)
** Lead spacings are 5.0mm (.197") center-to-center
\# Lead spacings are 6.35mm (.25") center-to-center
\+ Lead spacings are 3.18mm (.125") center-to-center

F Dimensions:
0.100" ± .015
0.125" ± .015
0.200" ± .015
0.250" ± .015"
0.100 " ± .015 (3 leaded)

P1 Dimensions:
Lead Spacing
0.100" – 0.200 ± .028"
0.125" – 0.187 ± .028"
0.200" – 0.150 ± .028"
0.250" – 0.125 ± .028"
0.100" – 0.100 ± .028" (3 leaded)

① T396/8*
② T350/1*
③ T352/3/6**
④ T354#
⑤ T355+

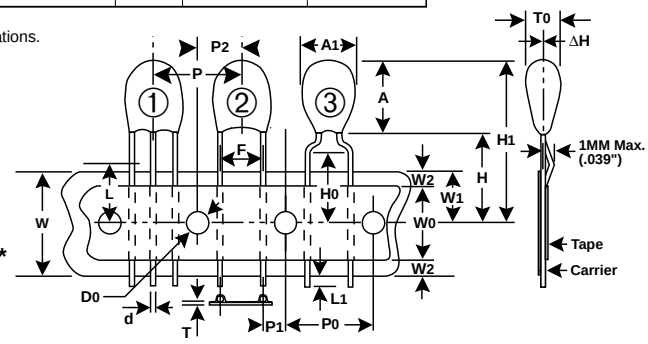

Tantalum Molded Radial – ARIS Specification (Automatic Radial Insertion System)

Tantalum Molded Tape and Reel Dimensions in Millimeters & (Inches)

Dimension	Symbol	Nominal mm (inch)	Tolerance mm (inch)
Body Height (1)	A	10.50 (.413)	± .38 (±.015) Maximum
Body Width (1)	A_1	15.24 (.600)	Maximum ± .38 ± (.015)
Sprocket Hole Diameter	D_0	4.0 (.157)	± 0.3 (± .012)
Lead Diameter	d	0.51 or 0.64 (.020) (.025)	± 0.05 or ± .03 (± .001)
Lead Center (5)	F	5.0 2.5 (.197) (.098)	+ 0.8/ - 0.2 (+ .032/ -.008)
Component Base to Tape Center (2)(4)(6)	H	16.0 - 21.0 (.630 - .827)	Reference Only
Lead Standoff Height	H_0	N/A	
Component Height Above Tape Center	H_1	32.25 (1.270)	Maximum
Component Alignment Front to Rear	Δ H	0	± 2.0 (± .079)
Cut Out Length	L	11.0 (.433)	Maximum
Lead Protrusion	L_1	2.0 (.079)	Maximum

Dimension	Symbol	Nominal mm (inch)	Tolerance mm (inch)
Component Pitch (5)	P	12.7 (.500)	± 1.0 (± .039)
Sprocket Hole Pitch (3)	P_0	12.7 (.500)	± 0.3 (±.012)
Sprocket Hole Center to Lead Center (4) (5)	P_1	3.85 4.76 5.1 (.152) (.188) (.201)	± 0.7 (±.028)
Sprocket Hole Center to Component Center	P_2	6.35 (.250)	± 1.3 (±.051)
Body Thickness	T_0	6.35 (.250)	± 1.3 Maximum
Total Tape Thickness	T	0.7 (0.28)	± .02 (±.008)
Carrier Tape Width	W	18.0 (.709)	+ 1.0/-0.5 (+.039/-.020)
Hold-Down Tape Width	W_0	15 or 6 (.561) (.236)	+ 1.0/-0.8 (+.039/.031)
Sprocket Hole Location	W_1	9.0 (.354)	+.075/-0.5 (+.030/-.020)
Hold-Down Tape Location	W_2	3.0 or 12.0 (.118) (.472)	Maximum

Notes: (1) See page 50 for T330, page 53 for T340 and page 59 for T35X specific dimensions.
(2) Reference Only
(3) Cumulative pitch error ± 1.0mm (.039") maximum in 20 consecutive sprocket hole locations.
(4) Measured at bottom of standoff.
(5) P, P1 and F measured at egress from carrier tape.
(6) H dimensions for T370 D and E 16.5mm ± 0.5mm (0.650" ± 0.020")

On polar devices, the positive (+) lead exits from container first.
* Lead spacings are 2.5mm (.098") center-to center
** Lead spacings are 5.0mm (.197") center-to-center.

① T370
② T340**
③ T330**

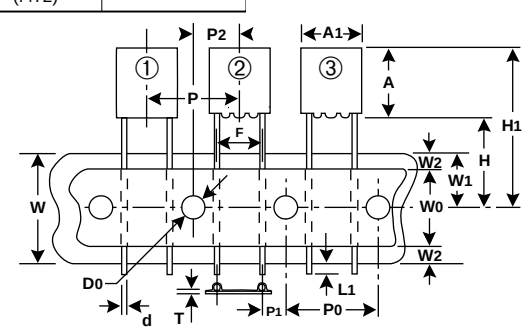

KEMET Electronics Corporation, P.O. Box 5928, Greenville, S.C. 29606 (864) 963-6300

TANTALUM PACKAGING

KEMET(1) Number	Military Style	Military Specification	Case Size	Standard Bulk(2) Quantity	Standard Reel Quantity	Reel Size	Standard Reeling Spec.	Ammo Pack Quantity	Ammo Pack Spec.
T110/T212,	CSR13	MIL-C-39003/1	A	150/Box	3500	12"	C-7200	1500	C-7293
T140/T242,	CSR23	MIL-C-39003/3	B	75/Box	2500	12"	C-7200	1000	Class I
T252,	CSR33	MIL-C-39003/6	C	20/Tray	500	12"	C-7200	250	C-7442
T262	CSR21	MIL-C-39003/9	D	20/Tray	400	12"	C-7200	250	Class II
									C-7443
									Class III
									See Page 71
									for class info.
T111/T213	CSR91	MIL-C-39003/4	A	60/Box	3000	12"	C-7200	N/A	N/A
			B	30/Box	2000	12"	C-7200		
			C	10/Card	N/A	N/A	N/A		
			D	10/Card	N/A	N/A	N/A		
T210,			A	40/Tray	3500	12"	C-7200	N/A	N/A
T216,	CSS13	MIL-C-39003/10	B	30/Tray	2500	12"	C-7200	N/A	N/A
T240,			C	20/Tray	500	12"	C-7200	N/A	N/A
T256	CSS33	MIL-C-39003/10	D	20/Tray	400	12"	C-7200	N/A	N/A
T222	CSR09	MIL-C-39003/2	A/B	50/Tray	N/A	N/A	N/A	N/A	N/A
			A	300/Box	N/A	N/A	N/A	N/A	
			B	150/Box					
T322/T323	CX01,	MIL-C-49137/1 & 5	A	300	4500	12"	C-7200	2000	C-7293
	CX05		B	250	4000	12"	C-7200	2000	Class I
			C	100	2500	12"	C-7200	1000	C-7442
			D	100	2500	12"	C-7200	1000	Class II
			E	100	500	12"	C-7200	250	C-7443
			F	100	500	12"	C-7200	250	Class III
									See Page 71
T330			A	400	1000	12"	C-7301	1600	
			B	300	1000	12"	C-7301	1200	
			C	200	1000	12"	C-7301	1200	
			D	100	N/A	N/A	N/A	N/A	
T340			A	300	1000	12"	C-7301	1600	
			B	300	1000	12"	C-7301	1500	
			C	200	1000	12"	C-7301	1500	
			D	100	250	12"	C-7301	450	
			E	50	150	12"	C-7301	N/A	
			F	100	N/A	N/A	N/A	N/A	
T350,			A	1000	1500	12"	C-7301/7303	2500	
T351,			B	1000	1500	12"	C-7301/7303	2500	
T352,			C	1000	1500	12"	C-7301/7303	2500	
T353,			D	1000	1000	12"	C-7301/7303	2000	
T354,			E	1000	1000	12"	C-7301/7303	2000	
T355,			F	500	1000	12"	C-7301/7303	1500	
T356			G	500	1000	12"	C-7301/7303	1500	
			H	500	800	12"	C-7301/7303	1500	
			J	100	800	12"	C-7301/7303	800	
			K	100	500	12"	C-7301/7303	800	
			L, M	100	500	12"	See Page 72	500	

NOTE: (1) Each KEMET number in its section applies to all case sizes. (2) Standard packaging refers to number of pieces per bag, box, tray or vial.

TANTALUM PACKAGING (Continued)

KEMET(1) Number	Military Style	Military Specification	Case Size	Standard Bulk(2) Quantity	Standard Reel Quantity	Reel Size	Standard Reeling Spec.	Ammo Packs
T363	CX02	MIL-C-49137/2	A	1000	1500	12”	C-7301/7303	2500
			B	1000	1500	12”	C-7301/7303	2000
			C	500	500	12”	C-7301/7303	800
			D	500	500	12”	See Page 72	800
T368			C	500	500	12”	C-7301/7303	800
			D	500	500	12”	C-7301/7303	800
T369	CX12	MIL-C-49137/2	A	1000	1500	12”	C-7301/7303	2500
			B	1000	1500	12”	C-7301/7303	2000
T370			C	500	N/A	N/A	N/A	N/A
			D	500	1000	12”	C-7301	N/A
			E	500	1000	12”	C-7301	N/A
			F	250	N/A	N/A	N/A	N/A
T378	CX06	MIL-C-49137/6	D	200	1000	12”	C-7301	N/A
			E	180	1000	12”	C-7301	N/A
			F	50	N/A	N/A	N/A	N/A
T396, T398			A-B	1000	1500	12”	C-7301/7303	2000
			C	500	1500	12”	C-7301/7303	2000
			D-F	500	1000	12”	C-7301/7303	1500
			G	500	1000	12”	C-7301/7303	2000
			H	500	800	12”	C-7301/7303	2000
			J	250	800	12”	C-7301/7303	1600
			K	250	500	12”	C-7301/7303	800
			L-M	250	500	12”	C-7301/7303	500

NOTE: (1) Standard packaging refers to number of pieces per bag, box, tray or vial. (2) Quantity varies. For further details, please consult the factory.

INTRODUCTION

KEMET solid tantalum capacitors are identified by the initial "T," followed by a unique "Series" number; for example, T110, T322, T350, etc. Each Series denotes a general physical form and type of encapsulation, as well as limits on dimensions and certain electrical characteristics under standard conditions of 25°C, 50% relative humidity, and one atmosphere pressure. Specific requirements are set forth in the respective Product Series in this catalog. All Military products are 100% electrically screened for the parameters shown in the respective product section. For non-military product, all series are 100% screened for leakage, capacitance and dissipation factor. All Series are inspected to electrical limits using a minimum .1% AQL sampling plans, according to the Military Standard MIL-STD-105, even after 100% testing. This sampling plan, to the best of KEMET Electronics' knowledge, meets or exceeds the generally accepted industry standard for similar products. KEMET capacitors may also be supplied, with prior agreement, to meet specifications with requirements differing from those of KEMET catalogs. ***Reference ESR values are provided but are NOT 100% screened***

These Notes apply generally to all KEMET solid tantalum capacitors and illustrate typical performance under normal application conditions, except where noted. Certain Series will respond differently to various environmental conditions. For example, hermetically sealed series are relatively immune to humidity effects, while plastic-encased series are not. The intent of these Notes is not to delineate such differences but to provide generalized information concerning performance characteristics.

1. GENERAL APPLICATION CLASS

Solid tantalum capacitors are usually applied in circuits where the AC component is small compared to the DC component. Typical uses known to KEMET Electronics include blocking, by-passing, decoupling, and filtering. They are also used in timing circuits. If two of these polar capacitors are connected "back-to-back" (i.e., negative-to-negative or positive-to-positive), the pair may be used in AC applications (as a non-polar device).

2. STORAGE CONDITIONS

Capacitors may be stored without applied voltage over the operating temperature range specified in the catalogs for each Series. The range is from -55 to +125° C for all Series.

Tantalum capacitors do not lose capacitance from the "de-forming" effect as do liquid-electrolytic capacitors. Storage at high temperature may cause a small, temporary increase in leakage current (measured under standard conditions), but the original value is usually restored within a few minutes after application of rated voltage.

Series which are not hermetically sealed exhibit reversible changes in parameters with respect to relative humidity (RH). Capacitance increases with increasing humidity. The limiting change, reached upon establishment of equilibrium with the environment, is approximately -5% to +12% over the range from 25% to 95% RH, referred to the standard 50% RH. The amount of change is dependent upon size (capacitance and voltage rating, ie: CV product); small sizes might change no more than ±5%. Equilibrium at such extremes is seldom attained by plastic-cased capacitors, and the change in capacitance is consequently less. The rate of response to humidity changes increases with increasing temperature. Dissipation factor also increases with increasing RH. The limiting change, at equilibrium with 95% RH, is approximately 50%.

DC leakage current may rise upon exposure to a combination of high temperature and high humidity, but is normally restored by voltage conditioning under standard conditions. The increase will be greater than that experienced under temperature influence alone because of conduction through absorbed water.

Hermetically-sealed and non-hermetic Series may be affected by absorption of water on external insulating surfaces. The water film may also attract a layer of dust from the air, increasing the effect. The most sensitive parameter is leakage current.

3. POLARITY

These capacitors are inherently polar devices and may be permanently damaged or destroyed if connected with the wrong polarity. The positive terminal is identified on the capacitor body by a polarity mark and the capacitor body may include an obvious geometrical shape. However, some Series contain two capacitors connected (negative-to-negative) to form "non-polar" capacitors. Rated voltage (see para. 8) may be applied to these Series in either direction.

4. OPERATING ENVIRONMENT

Most of the discussion under "Storage Conditions" will apply also when capacitors are operated within the applicable electrical ratings described below. The temporary increase in leakage current (at standard conditions) following elevated-temperature exposure is not observed, however, if the capacitors are operated with adequate DC voltage applied.

5. CAPACITANCE

Capacitance is measured at 120 Hz and 25° C with up to 1 volt rms applied. Note that, in either operation, peak AC plus DC bias must not exceed either rated voltage (normally polarized) or 15% of rated voltage in the reverse direction at 25°C. Measurement circuits are of high impedance, however, and under these conditions 1 volt rms may be applied even to 6 volt capacitors (23% peak reversal) without a DC bias. DC bias is thus normally not used, except when rated voltage is below 6 volts and the AC signal level exceeds 0.3 vrms. However, MIL-C-39003 provides for up to 2.2 volts DC. DC bias is not commonly used at room temperature, but is more commonly used at elevated temperatures.

DC bias causes a small reduction in capacitance, up to about 2% when full rated voltage is applied as bias. DF is also reduced by the presence of DC; rated voltage may cause a decrease in DF of about 0.2% (e.g., a decrease from 3.6 to 3.4% DF).

Capacitance changes very little below 1 kHz but decreases more noticeably at higher frequencies. Larger capacitance values decline more rapidly than small ratings. The effect of frequency upon capacitance is shown in Figure 1.

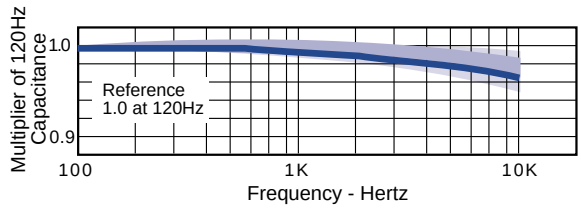

Figure 1. Normal Effect of Frequency upon Capacitance

Capacitance typically changes with temperature according to the curve of Figure 2.

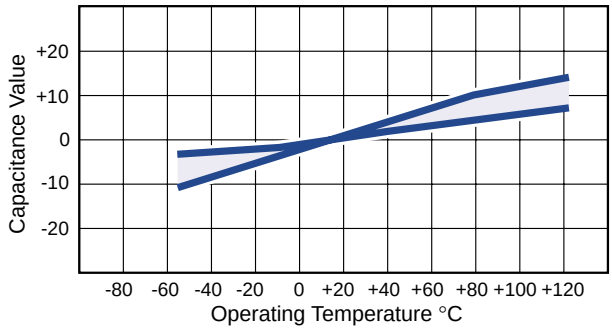

Figure 2. Typical Effect of Temperature upon Capacitance

6. DISSIPATION FACTOR (DF)

DF is measured at 120 Hz and 25° C with up to 1 volt rms applied. Note that, in either operation, peak AC plus DC bias must not exceed either rated voltage (normally polarized) or 15% of rated voltage in the reverse direction at 25°C. Measurement circuits are of high impedance, however, and under these conditions 1 volt rms may be applied even to 6 volt capacitors (23% peak reversal) without a DC bias. DC bias is thus normally not used, except when rated voltage is below 6 volts and the AC signal level exceeds 0.3 vrms. However, MIL-C-39003 provides for up to 2.2 volts DC. DC bias is not commonly used at room temperature, but is more commonly used at elevated temperatures.

Dissipation Factor (DF) is a useful low-frequency measure of the resistive component in capacitors. It is the ratio of the unavoidable resistance to the capacitive reactance, usually expressed in percent. DF increases with temperature above +25° C and may also increase at lower temperatures. Unfortunately, one general limit for DF cannot be specified for all capacitance/voltage combinations, nor can response to temperature be simply stated. Catalogs for the respective series list DF limits under various conditions.

Dissipation factor increases with increasing frequency as would be expected from the decreasing capacitive reactance. DF is not a very useful parameter above about 1 kHz. The DF of larger capacitance values increases more rapidly than that of smaller ratings. Figure 3 shows typical effect of frequency on DF.

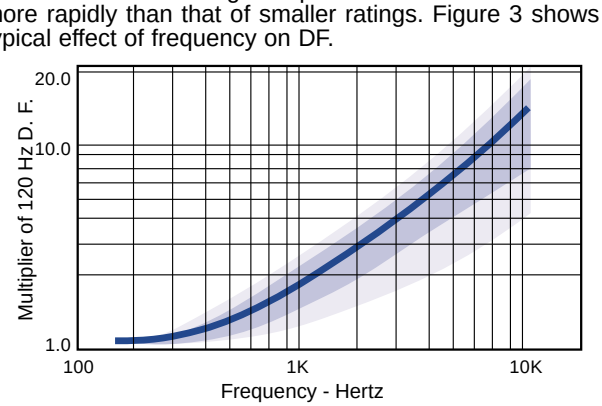

Figure 3. Normal Effect of Frequency upon Dissipation Factor

DC bias causes a small reduction in capacitance, up to about 2% when full rated voltage is applied, as bias. DF is also reduced by the presence of DC bias. Rated voltage may cause a decrease in DF of about 0.2% (e.g., a decrease from 3.6 to 3.4% DF).

DF is defined as $\frac{ESR}{X_c}$ and is also referred to occasionally, as tan d or "loss tangent." The "Quality Factor," Q, is the reciprocal of DF (DF is not expressed in percent in this calculation). Another expression, rarely used, is the "power factor," or $\frac{ESR}{Z}$. Power factor is cos u, while DF is ctn u.

7. DC LEAKAGE (DCL)

DC leakage is affected by voltage to a much larger extent, and this effect can frequently be used to advantage in circuits where only very low leakage currents can be tolerated. Typical response of DCL to applied voltage is illustrated in Figure 4.

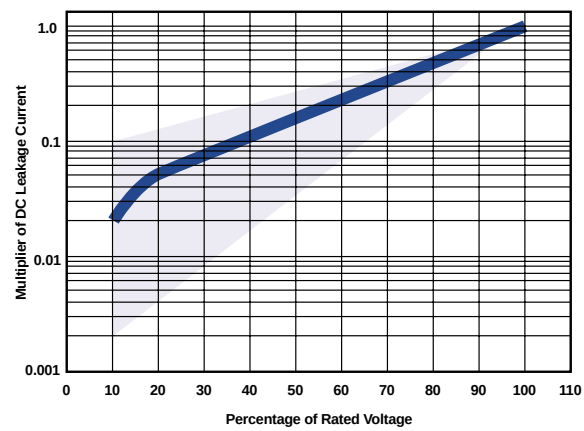

Figure 4. Typical Range of DC Leakage as a Function of Applied Voltage

DC leakage current (DCL) increases with increasing temperature according to the typical curve of Figure 5.

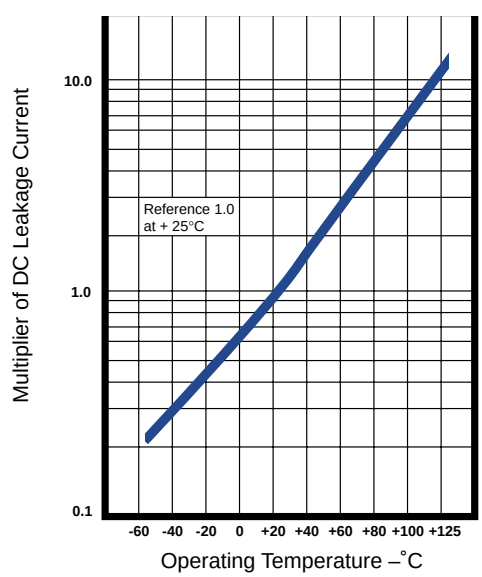

Figure 5. Typical Effect of Temperature upon DC Leakage Current

Leakage current is measured at a rated voltage through +85°C and may also be measured at +125°C with 2/3 of rated voltage applied.

8. RATED VOLTAGE

This term refers to the maximum continuous DC working voltage permissible at temperatures of +85° C or below. The lower operating temperature is specified as -55° C. Operation above +85° C is permissible, with reduced working voltage. Typical working voltage reduction is to 2/3 of rated voltage at +125° C.

9. WORKING VOLTAGE

This is the maximum recommended peak DC operating voltage for continuous duty at or below 85°C without DC voltage surges or AC ripple superimposed. No voltage derating is required below 85°C. Capacitors may be operated to 125°C with working voltage linearly derated to 2/3 of the 85°C rating at 125°C as shown in Figure 6.

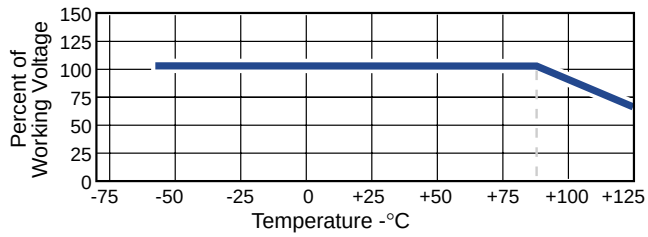

Figure 6. Working Voltage Change with Temperature

10. SURGE VOLTAGE

Surge voltage is defined as the maximum voltage to which the capacitor should be subjected under transient conditions, including peak AC ripple and all DC transients.

DC Working Voltage @ 85°C	2	3	4	6	10	15/16	20	25	35	50	60	75	100	125
Surge Voltage @ 85°C	2.6	4	5.3	8	13	20	26	33	46	65	78	98	130	140

TABLE 1 Surge Voltage Ratings

A typical surge voltage test is performed at +85°C with the applicable surge voltage per Table 1. The surge voltage is applied for 1000 cycles of 30 seconds on voltage through a 33 ohm series resistor and 30 seconds off voltage with the capacitor discharged through a 33 ohm resistor. Upon completing the test, the capacitors are allowed to stabilize at room temperature. Capacitance, DF, and DCL are then tested:

1. The DCL should not exceed the initial 25°C limit.
2. The capacitance should be within ±10% of initial value.
3. The DF should not exceed the initial 25°C limit.

11. REVERSE VOLTAGE

Although these are polar capacitors, some degree of transient voltage reversal is permissible, as seen below. The capacitors should not be operated continuously in reverse mode, even within these limits.

Temperature, °C.	Percentage of Rated Voltage
+25	15
+85	5
+125	1

TABLE 2 Reverse Voltage Ratings

12. EQUIVALENT SERIES RESISTANCE (ESR)

Equivalent Series Resistance (ESR) is the preferred high-frequency statement of the resistance unavoidably appearing in these capacitors. ESR is not a pure resistance, and it decreases with increasing frequency. Typical ESR limits are established in each specific product series. However, the ESR limits provided are for reference only, and are not necessarily the actual value that a particular Series product will attain.

Total impedance of the capacitor is the vector sum of capacitive reactance (X_C) and ESR, below resonance; above resonance total impedance is the vector sum of inductive reactance (X_L) and ESR.

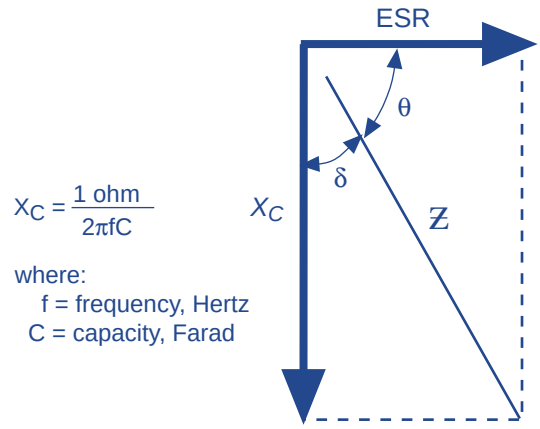

Figure 7a Total Impedance of the Capacitor Below Resonance

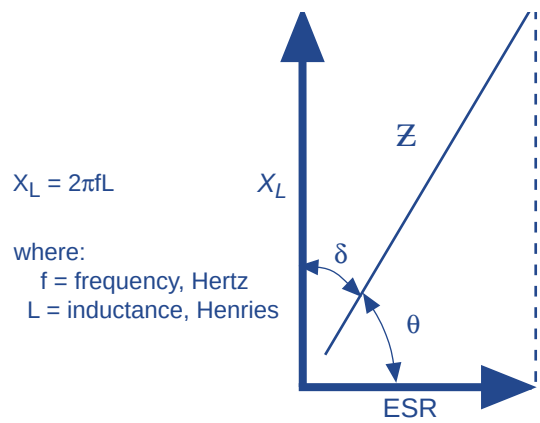

Figure 7b Total Impedance of the Capacitor Above Resonance

To understand the many elements of a capacitor, see Figure 8.

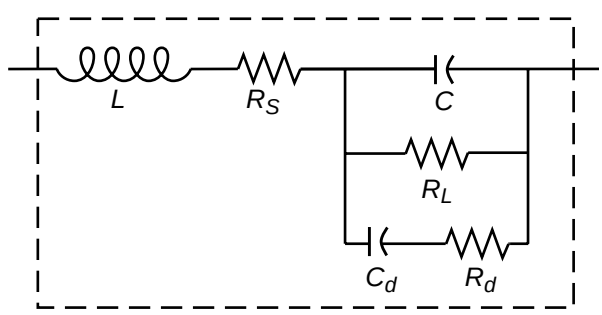

Figure 8. The Real Capacitor

A capacitor is a complex impedance consisting of many series and parallel elements, each adding to the complexity of the measurement system.

L — Represents lead wire and construction inductance. In most instances (especially in solid tantalum and

monolithic ceramic capacitors) it is insignificant at the basic measurement frequencies of 120 and 1000 Hz.

RS — Represents the actual ohmic series resistance in series with the capacitance. Lead wires and capacitor electrodes are contributing sources.

RL — Capacitor Leakage Resistance. Typically it can reach 50,000 megohms in a tantalum capacitor. It can exceed 10^{12} ohms in monolithic ceramics and in film capacitors.

Rd — The dielectric loss contributed by dielectric absorption and molecular polarization. It becomes very significant in high frequency measurements and applications. Its value varies with frequency.

Cd — The inherent dielectric absorption of the solid tantalum capacitor which typically equates to 1-2% of the applied voltage.

As frequency increases, X_c continues to decrease according to its equation above. There is unavoidable inductance as well as resistance in all capacitors, and at some point in frequency, the reactance ceases to be capacitive and becomes inductive. This frequency is called the self-resonant point. In solid tantalum capacitors, the resonance is damped by the ESR, and a smooth, rather than abrupt, transition from capacitive to inductive reactance ($XL = 2\pi fL$) follows.

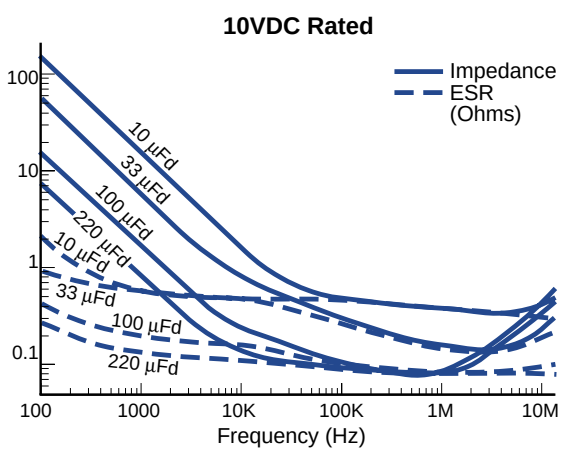

Figure 9. **ESR and Impedance vs. Frequency**

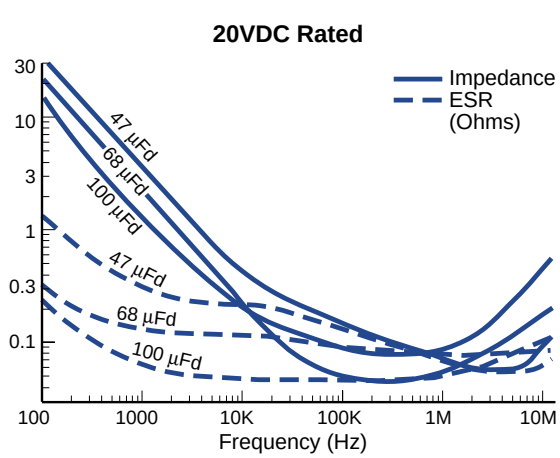

Figure 10. **ESR and Impedance vs. Frequency**

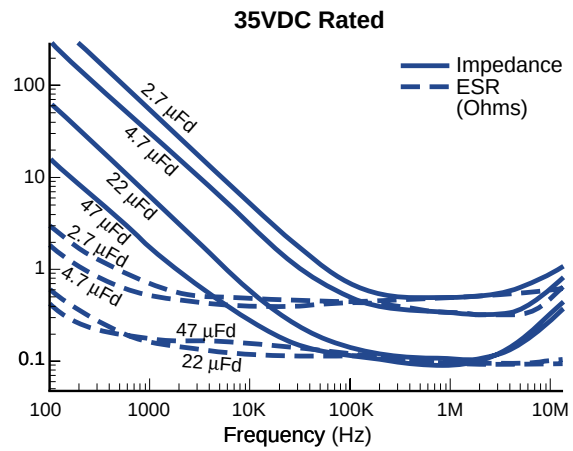

Figure 11a. **ESR and Impedance vs. Frequency**

Typical ESR and Z performance is given for representative capacitor ratings in Figures 9 through 11. Measured impedance will be affected by the length of lead wire included. Data for the curves were taken by including 1/2" of each lead wire in the measuring circuit.

Despite the fact that the reactance is entirely inductive above the self-resonance, these capacitors find use as decoupling devices above 10 MHz. Special designs have been developed for minimum inductance and are used above 100 MHz.

ESR and Z are also affected by temperature. At 100 kHz, ESR decreases with increasing temperature. The amount of change is influenced by the size of the capacitor and is generally more pronounced on smaller ratings.

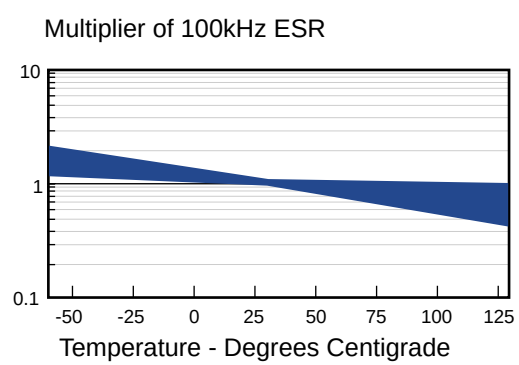

Figure 11b Typical Effect of Temperature on 100 kHz ESR

13. POWER DISSIPATION

Permissible power dissipation has been empirically established for all Series and is listed in each respective product section.

See pages 6-41 for herm seal, 42-50 for axial and radial molded, and 61-70 for tantalum dipped.

It is usually most convenient to translate the permissible power into an AC voltage rating. Assuming a sinusoidal waveform, the “ripple voltage” permissible may be calculated from the impedance and ESR data shown in the respective product section. However, three criteria must be observed:

1. Dissipated power must not exceed the limits specified for the Series.

2. The positive peak AC voltage plus the DC voltage must not exceed the maximum working voltage permitted at the ambient temperature.

3. The negative peak AC voltage, in combination with the DC voltage, must not exceed the permissible reverse voltage at the ambient temperature.

The rms ripple voltage limitation imposed by power dissipation is given by:

$$P = I^2R = \frac{E^2R}{Z^2}$$

where: I = rms ripple current (amperes)
E = rms ripple voltage (volts)
P = power (watts)
Z = impedance at specified frequency (ohms)
R = equivalent series resistance at specified frequency (ohms)

Maximum allowable rms ripple voltage may be determined as follows:

$$E(max) \ @ \ 25°C = Z \sqrt{\frac{P(max)}{R}}$$

E(max) = 85°C=0.9 E(max) @ 25°C
E(max) @ 125°C=0.4 E(max) @ 25°C
P(max) = maximum watts shown on Performance Characteristic pages 5, 42, 49, 58 and 61.

Permissible AC ripple current can be determined by the following:

$$I \text{ rms} = \sqrt{\frac{P(max)}{R}}$$

If two polar capacitors are connected back-to-back, [1] the pair may be operated on AC without need for DC bias. The first two criteria above must be observed. If DC is applied, the sum of DC and peak AC must not exceed, in either direction, the maximum working voltage specified for the ambient temperature.

[1] Some KEMET Series provide convenient assemblies of non-polar pairs. The two negative terminals are connected internally. It is also permissible to connect the two positive terminals to form a non-polar pair.

14. LONG-TERM STABILITY

Within the general class of electrolytic capacitors, solid tantalum capacitors offer unusual stability of the three important parameters: capacitance, dissipation factor, and leakage current. These solid-state devices are not subject to the effects of electrolysis, deforming or drying-out associated with liquid-electrolyte capacitors.

When stabilized for measurement at standard conditions, capacitance will typically change less than ±3% during a 10,000 hour life test +85° C. The same comparative change has been observed in shelf tests at +25° C extending for 50,000 hours. (Some of this change may stem from instrument or fixture error.)

Dissipation factor exhibits no typical trend. Data from 10,000 hour life tests at +85° C show that initial limits (at standard conditions) are not exceeded at the conclusion of these tests.

Leakage current is more variable than capacitance or DF; in fact, leakage current typically exhibits a logarithmic dependence in several respects. MIL-C-39003/1 permits leakage current (measured at standard conditions) to rise by a factor of four over 10,000 hour life tests. Typical behavior shows a lower rate of change, which may be negative or positive. Initial leakage currents are frequently so low (less than 0.1 nanoampere in the smallest CV capacitors, to about 10 microampere in the largest CV types) that changes of several orders of magnitude have no discernable effect on the usual circuit designs.

15. FAILURE MODE

Capacitor failure may be induced by exceeding the rated conditions of forward DC voltage, reverse DC voltage, surge voltage, surge current, power dissipation, or temperature. As with any practical device, these capacitors also possess an inherent, although low, failure rate when operated within the rated condition.

The dominant failure mode is by short-circuit. Minor parametric drifts (see Section 14 “Long-Term Stability”) are of no consequence in circuits suitable for solid tantalum capacitors. Catastrophic failure occurs as an avalanche in DC leakage current over a short (millisecond) time span. The failed capacitor, while called “short-circuited”, may exhibit a DC resistance of 10 to 104 ohm.

If a failed capacitor is in an unprotected low-impedance circuit, continued flow of current through the capacitor may obviously produce severe overheating. This heat may melt the internal solder (all Series) and the sealing solder used in hermetic Series. The short-circuit failure may thereby be converted to an open-circuit failure. If the circuit does not open promptly, the over-heated capacitor may damage the circuit board or nearby components. Protection against such occurrence is obtained by current-limiting devices or fuses provided by the circuit design.

Fortunately, the inherent failure rate of KEMET solid tantalum capacitors is low, and this failure rate may be further improved by circuit design. Statistical failure rates are provided for those capacitors with characters other than “A” in the next-to-last position of the part number. Relating circuit conditions to failure rate is aided by the guides in the section following.

16. RELIABILITY PREDICTION

Three important application conditions largely control failure rate: DC voltage, temperature, and circuit impedance. Estimates of the respective effects are provided by the nomograph in Figure 12 and Table 3 following. The nomograph related failure rate to voltage and temperature while the table relates failure rate to impedance. These estimates apply to steady-state DC conditions, and they assume usage within all other rated conditions.

Standard conditions, which produce a unity failure rate factor, are rated voltage, +85° C, and 0.1 ohm-per-volt circuit impedance. While voltage and temperature are straightforward there is sometimes difficulty in determining impedance. What is required is the circuit impedance seen by the capacitor. If several capacitors are connected in parallel, the impedance seen by each is lowered by the source of energy stored in the other capacitors. Energy is similarly stored in series inductors.

Failure rate is conventionally expressed in units of percent per thousand hours. As a sample calculation, suppose a particular batch of capacitors has a failure rate of 0.5% Khr under standard conditions. What would be predicted failure rate at 0.7 times rated voltage, +60° C and 0.8Ω/V? The nomograph gives a factor of 7 x 10-4, and the table gives a factor of 0.3. The failure rate estimate is then:

$$0.5 \times 7 \times 10^{-4} \times 0.3 = 1.05 \times 10^{-4}, \text{ or } 0.0001\% \text{ Khr}$$

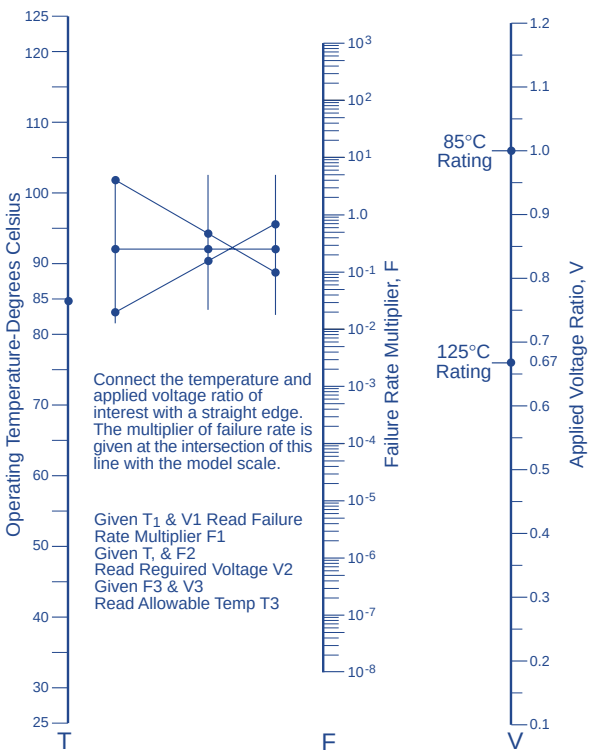

Figure 12. Reliability Nomograph

Circuit Impedance (ohms/volt)	Failure Rate Improvement (multiplying factors)
0.1	1.0
0.2	.8
0.4	.6
0.6	.4
0.8	.3
1.0	.2
2.0	.1
3 or greater	.07

TABLE 3 Relationship of Failure Rate to Impedance

Voltage "de-rating" is a common and useful approach to improved reliability. It can be pursued too far, however, when it leads to installation of higher voltage capacitors of much larger size. Inherent failure rate is roughly proportional to $CV^{1.6}$, where C is capacitance and V is rated voltage. The effect becomes particularly noticeable above 50-volt ratings. It is possible to lose more via higher inherent failure rate than is gained by voltage derating.

The relationships shown are more useful when the failure rate has been statistically determined for a given group of capacitors.

Failure rate is statistically determined for each production batch of KEMET High Reliability capacitors, as described in Specification GR500 Catalog F2956. As noted above, not all capacitance/voltage rate values are inherently equal in failure rate. GR500 capacitors are processed and subjected to 100% reliability testing as a homogeneous group of one capacitance/voltage value. Failure rate under standard conditions is available from 1 to 0.001% Khr, depending upon the capacitance/voltage value.

Several Series are qualified under U.S. military specification MIL-C-39003. Failure rates as low as 0.001%/Khr are available for all capacitance/voltage values in given groups under this test program. The specifications and their accompanying Qualified Products Lists should be consulted for details.

For Series not covered by military specifications, and internal sampling program is operated by KEMET Quality Assurance. The confidence level chosen for reporting the data is 60%. However, the cost of sampling each batch produced is overwhelmingly prohibitive, and no claim is made concerning knowledge of failure rate for any particular lot shipped. It is demonstrated that average failure rate for all commercial Series is between .1 and 1%/Khr at standard conditions and 60% confidence after 2,000 hours' testing, +85°C, and rated voltage and ≤ 1 ohm total series resistance.

17. SURGE CURRENT

All conventional reliability testing is conducted under steady-state DC voltage. Experience indicates that AC ripple, within the limits prescribed, has little effect on failure rate. Heavy surge currents are possible in some applications, however. Circuit impedance may be very low (below the standard 0.1 ohm/volt) or there may be driving inductance to cause voltage "ringing." Surge current may appear during turn-on of equipment, for example.

Failure rate under current-surge conditions may not be predictable from conventional life test data. A surge current test is utilized to ensure against a high frequency of such failures, and a description is available free of charge. The test has been adopted for all capacitors under MIL-C-39003/06/09/10 and KEMET's GR500 specifications.

18. ENVIRONMENTAL CONSIDERATION

It is not possible to foresee all the conditions to which capacitors may be subjected. Following is a list of standard tests which every Series will survive. Data may be available (upon request) under more severe stresses for certain Series.

- LIFE TEST 85°C OR 125°C, 2000 Hours: When subjected to 2000 hours at 85°C at full rated DC voltage, or 125°C at 2/3 of 85°C voltage, the capacitor shall meet the following requirements when tested at 25°C:

  The DCL shall be within 1.25 times the initial DCL limit.

  Capacitance shall be within ±10% of the initial measured value.

  The DF shall not exceed the initial limit.

- SHELF LIFE +85°, 2000 hours. Post test of capacitor shall meet the following requirements when tested at 25°C:

  The DCL shall be within 1.5 times the initial DCL limit.

  Capacitance shall be within ±10% of the initial measured value.

  The DF shall not exceed 1.5 times the initial limit.

- LEAD STRENGTH MIL-STD-202 Method 211: Pull test will be performed as in MIL-STD-202, Method 211. The following details and exceptions shall apply.
  a. Test condition letter—A
  b. The body of the capacitor will be securely clamped during test.

c. Applied force—3 pounds (1.4 kg).
d. Test Condition letter—C (M39003 Test Condition letter—D)
e. Applied Force—1 pound, 3 bends.

- VIBRATION; HIGH FREQUENCY: Per MIL-STD-202, Method 204, Condition D, 10 Hz to 2000 Hz.
  a. Mounting—Capacitors shall be mounted on a fixture by the body. Leads shall be supported by rigidly supported terminals.
  b. Electrical load conditions—During the test, the specified DC rated voltage shall be applied to the capacitors.
  c. Test condition letter—D (20 G).
  d. Duration and direction of motion—4 hours in each of two mutually perpendicular directions (total of 8 hours), one parallel and the other perpendicular to the axis.
  e. Measurements during vibration—During the last cycle, an electrical measurement shall be made to determine intermittent operation or open- or short-circuiting. Observations shall also be made to determine intermittent contact or arcing or open- or short-circuiting. Detecting equipment shall be sufficiently sensitive to detect any interruption with a duration of 0.5 ms, or greater.
  f. Examination after test—Capacitors shall be visually examined for evidence of mechanical damage.

- SHOCK TEST: Per MIL-STD-202, Method 213. The following details shall apply:
  a. Special mounting means—Capacitors shall be rigidly mounted on a mounting fixture by the body. When securing leads, care shall be taken to avoid pinching the heads.
  b. Test-condition letter—I (100 G peak). 6 ms. (saw-tooth)
  c. Measurements and electrical loading during shock—During the test, observations shall be made to determine intermittent contact or arcing or open- or short-circuiting. Detecting equipment shall be sufficiently sensitive to detect any interruption with a duration of 0.5 ms. The DC rated voltage shall be applied to the capacitors during the test.
  d. Examinations after test—Capacitors shall be visually examined for evidence of arcing, breakdown, and mechanical damage.

- HUMIDITY LIFE TEST: Capacitors shall be capable of withstanding 1000 hours at 55°C with an ambient humidity of 90-95% RH with rated DC voltage applied. After the capacitors have stabilized for a period of 24 hours at 25°C, they shall meet the following limits:

  DCL shall not exceed 5 times the initial limit.

  Capacitance shall be within ±10% of the initial value.

  DF shall not exceed 2 times the initial limit.

- THERMAL SHOCK—MIL-STD-202, Method 107: Capacitors shall be subjected to thermal shock in accordance with MIL-STD-202, Method 107, Test Condition A. M39003 Components tested to MIL-STD-202, Method 107, Condition B. Measurements before and after cycling are required. Conditioning prior to the first cycle will be 15 minutes at the following standard inspection conditions:
  a. Relative Humidity—Less than 50%.
  b. Ambient Temperature—25°C ±5°C.
  c. Final measurements are made after stabilization at room temperature.

- MOISTURE RESISTANCE—MIL-STD-202, Method 106: Capacitors shall be tested in accordance with MIL-STD-202, Method 106 including the following details:
  a. Mounting—The capacitors shall be mounted by normal mounting means
  b. Initial Measurements
  c. Polarizing and Load Voltage—Not applicable
  d. Final measurements—After the final cycle and within 2 to 6 hours after removal of the capacitors from the humidity chamber, capacitance, dissipation factor, and DC leakage will be measured.

  DCL should not exceed the initial 25°C limit.

  Capacitance should be within ±10% of the initial measured value.

  DF should not exceed the initial 25°C limit.

- RESISTANCE TO SOLVENTS — MIL-STD-202, Method 215:

  Brushing required after test.

  DCL meets limit shown in respective Part Number Tables.

  Capacitance meets applicable tolerance.

  DF meets limits shown in respective Part Number Tables.

  No visible damage to case or marking.

- RESISTANCE TO SOLDERING HEAT — MIL-STD-202,

  Method 210, Test Condition.

  Letter B. (260° for 10 Sec.)

  Leads shall be immersed to within ¼ inch of the capacitor body. Capacitance, DF, and DCL should meet original limits shown in respective Part Number Tables.

- SOLDERABILITY — MIL-STD-202, Method 208;

  Number of terminations on each capacitor tested: 2.

  Depth of insertion in flux and solder to within .125" of capacitor body.

- FLAMMABILITY — The encapsulant for Molded and Conformal Coated Product meets or exceeds the following requirements:

  Underwriters Lab. UL 94V-0

  Oxygen Index per ASTM-D-2863

  28% min.

- STABILITY AT LOW AND HIGH TEMPERATURE

  -55°C to 125°C: Capacitors will be capable of withstanding extreme temperature testing at a succession of continuous steps at +25°C, -55°C, +25°C, +85°C, +125°C, +25°C, in the order stated. Capacitors shall be brought to thermal stability at each test

temperature. Capacitance, DF, and DCL are measured at each test temperature except that DCL is not measured at -55°C. DC bias of 2.0 ±0.5 vdc is recommended for the capacitance and DF measurements.

When measurements are made at the various steps, the electrical limits for each temperature shall not exceed the following limits.

Step 1, +25°C,	DCL as indicated in original limit; capacitance within tolerance specified; DF as indicated in original limit shown in Part Number Tables.
Step 2, -55°C,	Capacitance within ±10% of initial value; ESR, DF within limit shown in Part Number Tables.
Step 3, +25°C,	DCL as indicated in original limit; capacitance within ±5% of initial value; ESR, DF within limit shown in Part Number Tables.
Step 4, +85°C,	DCL shall not exceed 10 times original DCL limit at 25°C. Capacitance shall be within ±10% of the initial value. DF shall be within 125% of limits shown in Part Number Tables. ESR shall be within limits shown in Part Number Tables.
Step 5, +125°C,	DCL shall not exceed 12.5 times the original limit at 25°C. Capacitance shall be within ±12% of initial value. DF shall be within 150% of limits shown in Part Number Tables. ESR shall be within limits shown in Part Number Tables.
Step 6, +25°C,	DCL as indicated in original limit; capacitance within ±5% of initial value; ESR, DF as indicated in original limit shown in Part Number Tables.

Note: M39003 specifies Δ's and limits by individual slash sheet.

- DAMP HEAT, STEADY STATE: Meets requirements of IEC Publication 384-15, method IEC 68-2-3. Climatic category 55/125/56.

19. MOUNTING

All encapsulated Series fall into two general classes. The first is provided with leads extending from opposite ends of the body, generally along the principle axis of the body (“axial leads”). The second is provided with parallel leads extending from one side or face of the body (“radial leads”). With either type, mounting points are normally provided by the leads themselves.

Axial leads may be used for point-to-point wiring, but usually, the wires are bent at 90° from the capacitor axis for insertion through printed circuit (PC) boards. Axial capacitors supplied on reels for machine insertion will withstand the mechanical stresses of bending and inserting by all popular machines known to KEMET at this time. Most KEMET axial Series may be supplied on reels to feed such machines. Radial leads are intended to plug directly into holes of PC boards. Auto-machines will insert combatible radial capacitor designs, and most KEMET capacitors may be supplied in appropriate reeled forms (ARIS).

With either axial or radial types, attention should be paid to treatment of the capacitors during mounting and afterward under service conditions. Difficulty during mounting usually arises from lead damage or from overheating. Hand soldering technique or, more often, wave-solder machines cause the overheating. The internal cathode connection on most Series is made between solder and a silver-pigmented paint. If too much heat is applied, this solder may remelt and degrade the silver-solder interface or cause a direct short-circuit.

KEMET’s hermetically-sealed series has an internal space into which molten cathode solder may run, depriving the cathode connection and possibly flowing across the terminals to short-circuit the capacitor from the inside. It is also possible to remelt the solder which bonds the rim of the glass-metal seal, causing loss of hermeticity and possibly a short-circuit. Finally, solder at the exit point of the positive wire may be remelted with similar effect. This solder is a high-temperature alloy, however, and it is much less likely to be melted. (Re-dipping of lead wires is practiced by some users, introducing another hazard of remelting this solder).

Plastic-encased Series have only one site of solder, the internal cathode connection. The rate of heat transfer through the plastic is lower than through the metal can of hermetic Series, but conduction along the negative leadwire to remelt this solder is very similar. There is little internal void within plastic cases, so remelted solder tends to remain in its original location and solidify when heat is removed. Short-circuiting is very unlikely, but reliability of the internal connection may be compromised by leaching of silver from the paint into the molten solder. The latter effect degrades the cathode connection in hermetic parts as well.

All encased capacitors will pass the Resistance to Soldering Heat Test of MIL-STD-202, Method 210, Condition B. This test dips each leadwire into molten solder at +260° C for 10 seconds while the capacitor body is held vertically above the solder. KEMET capacitors will pass this test when the depth of immersion brings the capacitor body (or closest external solder joint, if it is closer as in some hermetic Series) to a minimum distance of 0.100 inches from the solder surface. This demonstration of resistance to solder heat is in accordance with what is believed to be the industry standard. More severe treatment must be considered reflective of an improper soldering process.

Shown in Figure 13 is a recommended solder wave profile for both axial and radial leaded solid tantalum capacitors.

Optimum Solder Wave Profile

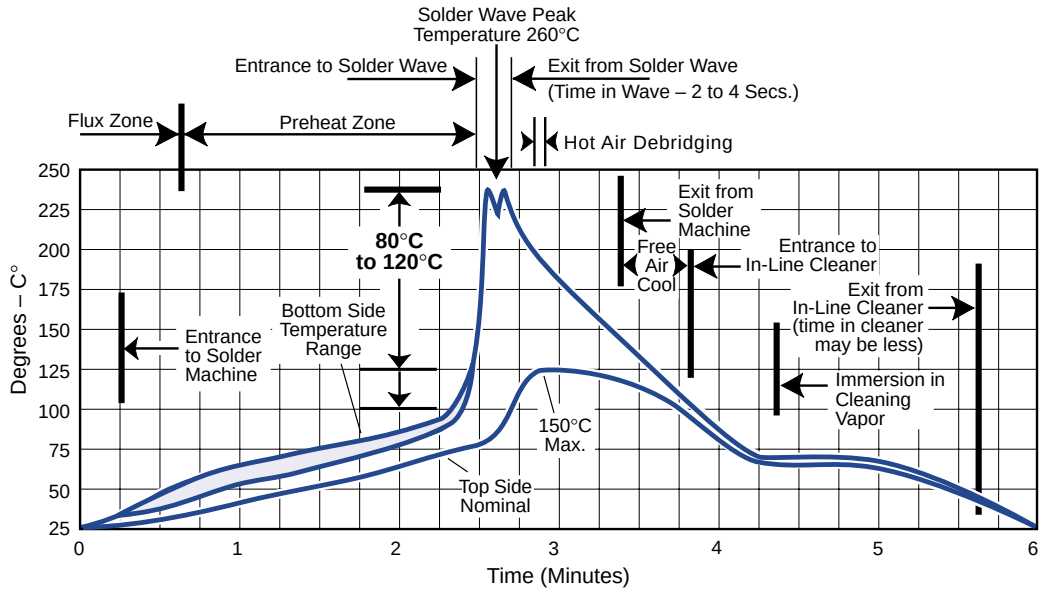

Figure 13.

KEMET Electronics Corporation

World Sales Headquarters
P.O. Box 5928 ¥ Greenville, SC 29606 ¥ www.kemet.com
Phone: (864) 963-6300 ¥ Fax: (864) 963-6521

USA/Canada Locations

KEMET Electronics Corporation
2350 Mission College Blvd., Suite 972
Santa Clara, CA 95054
Phone: 408-986-0424
Fax: 408-986-1442

KEMET Electronics Corporation
Schaumburg Corporate Center
Suite 350, 1515 Woodfield Road
Schaumburg, IL 60173
Phone: 847-517-1030
Fax: 847-517-1037

KEMET Electronics Corporation
444 Washington Street, Suite 510
Woburn, MA 01801
Phone: 781-933-1010
Fax: 781-376-0929

KEMET Electronics Corporation
8445 Freeport Parkway, Suite 320
Irving, TX 75063
Phone: 972-870-9530
Fax: 972-870-9537

KEMET Electronics Canada Ltd.
105-7145 West Credit Ave., Bldg. #2
Mississauga, L5N 6J7, ON
Canada
Phone: 905-542-7930
Fax: 905-542-7949

KEMET Electronics Canada Ltd.
6001 35th Avenue
:ava; West, Quebec, Canada H7R 3P7
Phone: 450-962-0806
Fax: 450-962-6462

Europe/Africa Locations

KEMET Electronics S.A.
1-3, Avenue de la Paix
P.O.B. 76
CH-1211 Geneva 20,
Switzerland
Phone: 41-22-715-0100
Fax: 41-22-715-0170

KEMETElectronics GmbH
Elisabethstrasse 89-91
D-80797 Munich
Germany
Phone: 49-89-456-4200

KEMET Electronics Ltd.
Waterfront House, 55/61 South St.
Bishop s Stortford
Hertfordshire, CM23 3AL
United Kingdom
Phone: 44-1279-757343
Fax: 44-1279-757188

Aviv Electronics Ltd.
Hayetzira St. No. 4
P.O. Box 2433
Ra anana, 43100, Israel
Phone: 972-9-748-3232
Fax: 972-9-741-6510

KEMET Electronics S.A.R.L.
ZAC Paris Rive Gauche
118-122, avenue de France
75013 Paris, France
Phone: 01-33-01-464-61009
Fax: 01-33-01-464-61599

Arrow Altech Distribution PTY LTD
P.O. Box 701
Isando, 1600
South Africa
Phone: 27-11-923-9699
Fax: 27-11-923-9720

Asia Locations

KEMET Electronics (Shanghai) Co., Ltd.
2/F, No. 7 Bldg., 330 Xiya Rd.
Waigaoqiao Free Trade Zone
Pudong, Shanghai 200137, China
Phone: 86-21-5046-0983
Fax: 86-21-5046-0981

KEMET Electronics Asia Ltd.
Rm 605, Citic Bldg.
No. 19 Jian Guo Men Wai Da Jie
Beijing, 100004, China
Phone: 8610-8526-3628
Fax: 8610-8526-3626

KEMET Electronics Asia Ltd.
30 Canton Rd., Room 1512
Silvercord Tower II
Tsimshatshui, Kowloon Bay, Hong Kong
Phone: 852-2305-1168
Fax: 852-2759-0345

KEMET Electronics Marketing PTE Ltd.
8-2-04, Sunny Point Kompleks
Jalan Batu Uban, 11700 Penang
Penang, Malaysia
Phone: 60-4-6595200
Fax: 60-4-6595220

KEMET Electronics Marketing PTE Ltd.
101 Thomson Road, #23-03
United Square
Singapore, 307591, Singapore
Phone: 65-6353-6636
Fax: 65-6353-6656

KEMET Electronics Corporation
Taiwan Branch, 3-4F, No. 148, Section 4
Chung-Hsaio E. Rd.
Taipei, Taiwan ROC
Phone: 886-2-27528585
Fax: 886-2-27213129

WesTech Electronics & System Co. Ltd
302/12 Central Condominum
Ladproa Soil, Ladproa Road
Ladyao, Jatujak
Bangkok, Thailand 109000
Phone: 662-939-3482-6
Fax: 662-939-3481

Crusader Electronics Pty. Ltd.
Unit 3, 92 Bryant Street
Padstow, NSW 2211, Australia
Phone: 612-9792-3922
Fax: 612-9792-1446

Unicom International Corporation
702 Shinhwa Bldg., Mapo-Gu
Seoul, 121050, Korea
Phone: 82-2712-5821
Fax: 82-2712-5823

NOTICE: Place 011 in front of the above Phone and Fax numbers for Europe and Asia, when dialing from a United States exchange.
Note: KEMET reserves the right to modify minor details of internal and external construction at any time in the interest of product improvement.
KEMET does not assume any responsibility for infringement that might result from the use of KEMET Capacitors in potential circuit designs.
' KEMET is a registered trademark of KEMET Electronics Corporation. ' KEMET Electronics Corporation