THIS DRAWING IS UNPUBLISHED. RELEASED FOR PUBLICATION 2007
© COPYRIGHT 2007 BY TYCO ELECTRONICS CORPORATION. ALL RIGHTS RESERVED.

LOC	DIST
A1	-

REVISIONS

F	LTR	DESCRIPTION	DATE	DWN	APVD
	A9	New ProE Drawing created. Drawing updated.	10MAY07	Abr	Brun
	A10	Dash number 6-962915-6 added	07AUG08	Mey	Brun
	A11	Wrong notes on Table corrected	05OCT08	Abr	Brun
	A12	0.32±0.05 added	02MAR09	Mey	Brun

STRIP FORM / Bandware

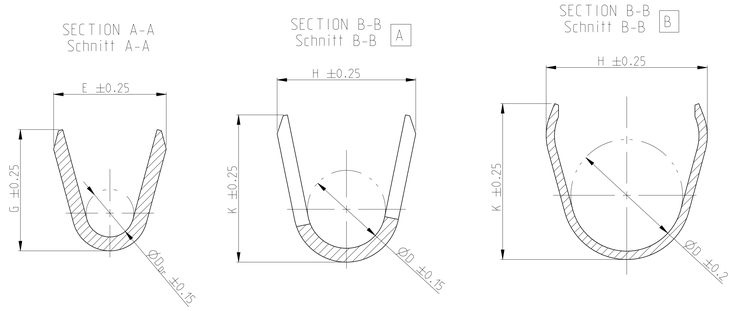

WIRE CRIMP
Drahtcrimp

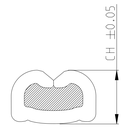

LOOSE PIECE / Einzelausfuehrung

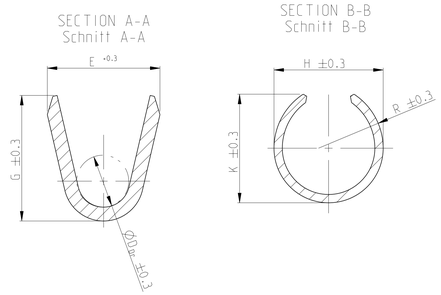

FLR- / FLK - WIRE
FLR- / FLK - Leitung

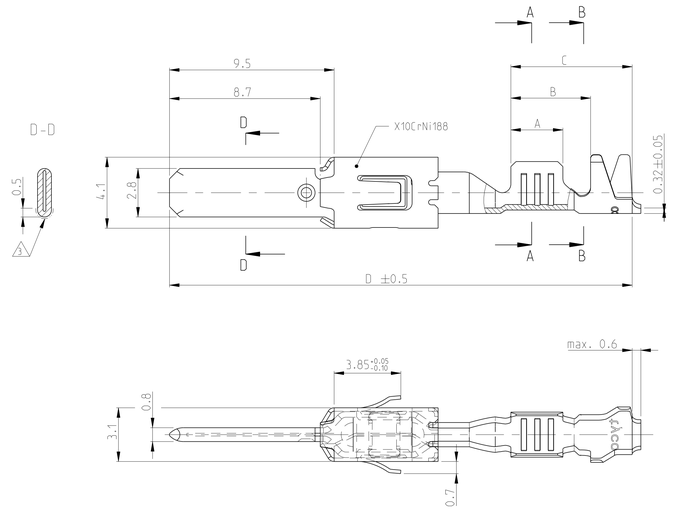

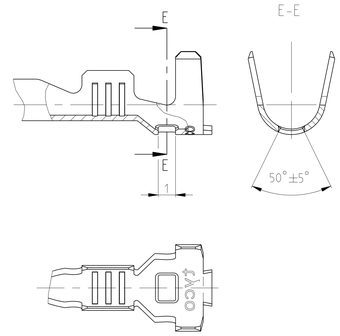

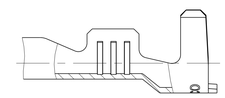

DESIGN FOR PN 968946

Ausführung PN 968946

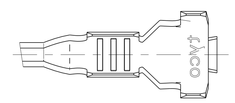

								SEE / siehe SECTION A-A Schnitt A-A	SEE / siehe SECTION B-B Schnitt B-B	SEE / siehe WIRE CRIMP Drahtcrimp	SEE / siehe SECTION A-A Schnitt A-A	SEE / siehe SECTION B-B Schnitt B-B							
SINGLE WIRE SEAL / Einzeldichtungssystem	1-1719504-2	A	-	CuSn4	1	12 AWG	max. 3.0	E = 4.0 G = 4.2 D_{Dr} = 2.0	A H = 5.3 K = 5.0 D = 3.6	AWG 12 = 2.0	-	-	1852291-3	-	3.5	6.0	7.6	26.8	5
	1-1719504-1	A	-		4														
	3-968947-1	A	3-968966-1	CuSn0.20	1	>2.5 - 4.0 FLR	max. 3.7	E = 4.5 G = 4.7 D_{Dr} = 2.3	B H = 6.2 K = 6.0 D = 4.3	4.0 mm² = 2.25	DIMENSION SEE STRIP FORM Masse siehe Bandware		MQC APPLICATOR 2-541537-2	539635-1 MATRIZE : 539727-2	4.3	6.0	8.5	28.5	828985 6
	2-968947-2	A	2-968966-2	CuFe	1														
	2-968947-1	A	2-968966-1		4														
	1-968947-2	A	1-968966-2	CuSn4	1														
	1-968947-1	A	1-968966-1		4														
	2-962916-3	E	2-963749-3	CuFe	2	>1.0 - 2.5 FLR	max. 3.0	E = 3.6 G = 3.8 D_{Dr} = 1.7	A H = 5.3 K = 5.0 D = 3.6	2.5 mm² = 1.88 2.0 mm² = 1.73 1.5 mm² = 1.58	E = 2.8 G = 3.9 D_{Dr} = 1.7	H = 4.8 K = 4.5 R = 2.8	MQC APPLICATOR 2-878560-2	734440-1	3.5	6.0	7.6	26.8	828905
	2-962916-2	E	2-963749-2		1														
	2-962916-1	E	2-963749-1		4														
	1-962916-3	E	1-963749-3	CuSn4	2														
	1-962916-2	E	1-963749-2		1														
	1-962916-1	E	1-963749-1		4														
	2-962915-3	E	2-963748-3	CuFe	2	0.5 - 1.0 FLR	max. 2.1	E = 2.6 G = 2.9 D_{Dr} = 1.2	A H = 5.0 K = 4.8 D = 3.3	1.0 mm² = 1.36 0.75 mm² = 1.27 0.5 mm² = 1.18	E = 2.2 G = 2.9 D_{Dr} = 1.1	H = 4.6 K = 4.3 R = 2.3	MQC APPLICATOR 2-878559-2	734438-1	3.0	5.4	7.0	26.8	828904
	2-962915-2	E	2-963748-2		1														
	2-962915-1	E	2-963748-1		4														
	6-962915-6	E	-	CuSn4	1, 2														
	1-962915-3	E	1-963748-3		2														
	1-962915-2	E	1-963748-2		1														
	1-962915-1	E	1-963748-1		4														
	1-965982-3	A	1-965983-3	CuSn4	2	0.2 - 0.5 FLK	max. 2.1	E = 2.1 G = 2.1 D_{Dr} = 0.8	A H = 4.7 K = 4.5 D = 3.2	0.5 mm² = 1.12 0.35 mm² = 1.05 0.2 mm² = 0.98	E = 1.7 G = 2.15 D_{Dr} = 0.8	H = 4.2 K = 4.15 R = 2.4	MQC APPLICATOR 2-878558-2	539635-1 MATRIZE : 539737-2	2.5	4.9	6.5	26.8	828904
	1-965982-1	A	1-965983-1		4														
UNSEALED / ungedichtet	2-962843-3	C	2-963747-3	CuFe	2	>1.0 - 2.5 FLK	2.4 - 3.7	E = 3.6 G = 3.8 D_{Dr} = 1.7	A H = 5.5 K = 5.7 D = 3.2	2.5 mm² = 1.88 1.5 mm² = 1.58	E = 2.8 G = 3.9 D_{Dr} = 1.7	H = 4.2 K = 5.1 R = 2.4	MQC APPLICATOR 2-878552-2	734417-3	3.6	5.2	8.9	28.6	
	2-962843-2	C	2-963747-2		1														
	2-962843-1	C	2-963747-1		4														
	1-962843-3	C	1-963747-3	CuSn4	2														
	1-962843-2	C	1-963747-2		1														
	1-962843-1	C	1-963747-1		4														
	3-968946-1	A	3-968965-1	CuSn0.20	1	>2.5 - 4.0 FLR	2.7 - 3.7	E = 4.5 G = 4.7 D_{Dr} = 2.3	A H = 5.7 K = 5.9 D = 3.3	4.0 mm² = 2.25	E = 3.4 G = 4.7 D_{Dr} = 2.3	H = 4.4 K = 5.9 R = 2.6	MQC APPLICATOR 2-541534-2	539635-1 MATRIZE : 539723-2	4.3	6.6	8.5	28.5	
	2-968946-2	A	2-968965-2	CuFe	1														
	2-968946-1	A	2-968965-1		4														
	1-968946-2	A	1-968965-2	CuSn4	1														
	1-968946-1	A	1-968965-1		4														
	2-962842-3	E	2-963746-3	CuFe	2	>1.0 - 2.5 FLR	2.1 - 2.9	E = 3.6 G = 3.8 D_{Dr} = 1.7	A H = 4.3 K = 4.5 D = 2.6	2.5 mm² = 1.88 2.0 mm² = 1.73 1.5 mm² = 1.58	E = 2.8 G = 3.9 D_{Dr} = 1.7	H = 3.6 K = 4.1 R = 2.1	MQC APPLICATOR 2-878551-2	734417-2	3.6	5.2	8.2	27.9	
	2-962842-2	E	2-963746-2		1														
	2-962842-1	E	2-963746-1		4														
	1-962842-3	E	1-963746-3	CuSn4	2														
	1-962842-2	E	1-963746-2		1														
	1-962842-1	E	1-963746-1		4														
	2-962841-3	F	2-963745-3	CuFe	2	0.5 - 1.0 FLR	1.4 - 2.1	E = 2.5 G = 2.8 D_{Dr} = 1.1	A H = 3.2 K = 3.4 D = 1.8	1.0 mm² = 1.36 0.75 mm² = 1.27 0.5 mm² = 1.18	E = 2.2 G = 2.8 D_{Dr} = 1.1	H = 2.8 K = 3.0 R = 1.6	MQC APPLICATOR 2-878550-2	734417-1	3.0	4.6	7.0	26.7	
	2-962841-2	F	2-963745-2		1														
	2-962841-1	F	2-962841-1		4														
	1-962841-3	F	1-963745-3	CuSn4	2														
	1-962841-2	F	1-963745-2		1														
	1-962841-1	F	1-963745-1		4														
	2-963860-3	B	2-963861-3	CuFe	2	0.2 - 0.5 FLR	1.3 - 1.6	E = 2.1 G = 2.1 D_{Dr} = 0.8	A H = 2.9 K = 2.9 D = 1.4	0.5 mm² = 1.12 0.35 mm² = 1.05 0.2 mm² = 0.98	E = 1.7 G = 2.1 D_{Dr} = 0.8	H = 2.5 K = 2.5 R = 1.4	MQC APPLICATOR 2-878549-2	734538-1	2.5	3.7	5.8	25.5	
	2-963860-2	B	2-963861-2		1														
	2-963860-1	B	2-963861-1		4														
	1-963860-3	B	1-963861-3	CuSn4	2														
	1-963860-2	B	1-963861-2		1														
	1-963860-1	B	1-963861-1		4														
	TE ORDER-NO. STRIPFORM Bandware	REV	TE ORDER-NO LOOSE PIECE Einzelausfuehrung	MATERIAL Werkstoff	SURFACE Oberflaeche	DGB mm²	INSULATIONØ Isolationsø mm	STRIP FORM WIRE CRIMP Drahtcrimp / INSUL. CRIMP Isolationscrimp Bandware		WIRE CRIMP HEIGTH CH Drahtcrimphoehe CH	LOOSE PIECE WIRE CRIMP Drahtcrimp / INSUL. CRIMP Isolationscrimp Einzelausfuehrung		APPLICATION TOOL Anschlagwerkzeug	HAND TOOL Handzange	A	B	C	D	TE ORDER-NO. SINGLE WIRE SEAL Einzeldichtungssystem
								CRIMP DIMENSION mm Crimpabmessungen mm					EXTRACTION TOOL Ausdrueckwerkzeug No. 968107-1						

NOTES
Bemerkungen

1. CONTACT AREA PRE SILVER MIN. 3 µm
   CANTILEVER SPRING PLAIN
   Kontaktzone vorversilbert min. 3 µm
   Ueberfeder blank
2. CONTACT BODY Ni-PLATING MIM. 0.5 µm; CONTACT AREA PRE-GOLD MIN. 0.6 µm
   OVER NICKEL; CRIMP AREA PRE-TIN
   CANTILEVER SPRING PLAIN
   Kontaktkoerper vernickelt min. 0.5 µm; Kontaktzone vorvergoldet min. 0.6 µm ueber Nickel
   Crimpzone vorverzinnt; Ueberfeder blank
3. _ . . _ _ . . _ IN THIS AREA CRACK SHAPING AT THE SURFACE PERMISSIBLE
   In diesem Bereich Rissbildung in der Oberflaeche zulaessig
4. PRE-TIN MIN. 1 µm; CANTILEVER SPRING PLAIN
   vorverzinnt min. 1 µm; Ueberfeder blank
5. AWG 12 TXL 828905-1 OR / oder 282536-1
   AWG 12 GXL 638865-1
6. ATTENTION! CONSTRUCTION OF THE CONTACT CAVITY IN THE AREA
   OF THE SINGLE WIRE SEAL IS Ø6.4 +0.1 -0.05
   Achtung! Die Kammer ist im Bereich der Einzeldichtung
   auf Ø6.4 +0.1 -0.05 auszulegen
7. PUNCHED WITH VOLATILIZING STAMPING-OIL
   Gestanzt mit verfluechtigendem Stanzoel

THIS DRAWING IS A CONFIDENTIAL DOCUMENT OF TYCO ELECTRONICS CORPORATION IT IS LOANED UNDER STRICT CONFIDENCE AND MUST BE RETURNED UPON REQUEST.

DWN K.Gerlach 14JUN99
CHK M.Bleicher
APVD -

Tyco Electronics
Tyco Electronics AMP GmbH
64625 Bensheim (Germany)

DIMENSIONS: mm
TOLERANCES UNLESS OTHERWISE SPECIFIED:
0 PLC ±-
1 PLC ±-
2 PLC ±-
3 PLC ±-
4 PLC ±-
ANGLES ±1.5°
FINISH -
MATERIAL -
WEIGHT -

PRODUCT SPEC 108-18063
APPLICATION SPEC 114-18051

NAME
PRODUCT GROUP DRAWING FOR TAB 2.8x0.8
Produktgruppenzeichnung fuer
Kontaktsatz 2.8x0.8

SIZE A0 DWG NO 00779 REV C
SCALE 8:1 SHEET 1 OF 1 A12

CUSTOMER DRAWING

NOT A TEST REVISION

AMP 4806 REV 31MAR2000
Pro/ENGINEER DRAWING