REV.	DATE	DESCRIPTION	BY	C'K'D'
02	170394	CONVERSION ME10	J.G.	
03	10/03/99	Temperature range -55C instead of -25C	K.N.	
04	27/09/07	ADD MATERIAL OF O-SEAL FOR "H" VERSION	R Ch	
05	21/01/10	ADD (H) VERSION IN THE TABLE	R Ch	

WIRING FACE

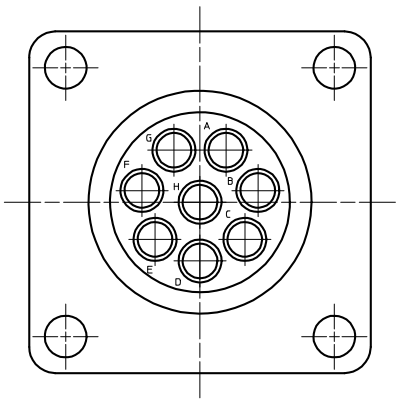

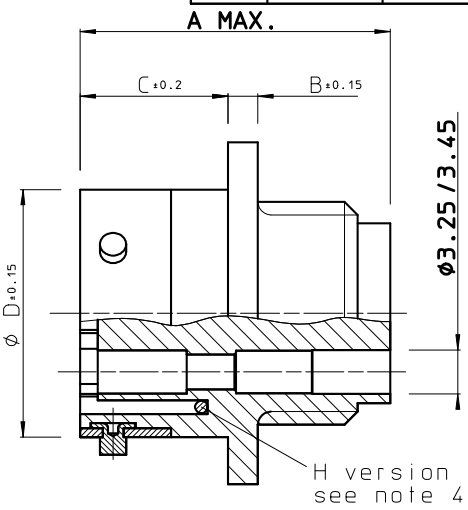

MATING FACE

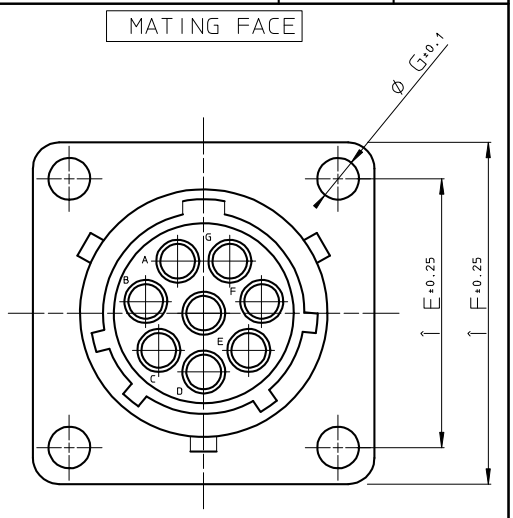

CAT. NUMBER	A MAX.	B ±0.15	C ±0.2	Ø D ±0.15	E ±0.25	F ±0.25	Ø G ±0.1	Ø H ±0.1	Ø J ±0.1
UTG0104S(H)	24.3	2.3	11.3	15.0	18.3	23.8	3.2	17.3	15.1
UTG0125S(H)	24.3	2.3	11.3	19.0	20.6	26.2	3.2	21.8	18.2
UTG0128S(H)	24.3	2.3	11.3	19.0	20.6	26.2	3.2	21.8	18.2
UTG01412S(H)	24.3	2.3	11.3	22.2	23.0	28.6	3.2	25.0	21.4
UTG01619S(H)	24.3	2.3	11.3	25.3	24.6	31.0	3.2	28.1	24.6
UTG01823S(H)	24.3	2.5	11.3	28.5	26.9	33.1	3.2	31.3	27.8
UTG02028S(H)	27.0	2.5	14.5	31.7	29.4	36.5	3.2	34.5	30.9
UTG02235S(H)	28.0	3.5	14.5	34.9	31.6	39.3	3.2	37.7	34.1
UTG02448S(H)	30.4	3.5	15.3	38.0	34.9	42.9	3.9	40.9	37.3
* NOTE 4									

UTG0128S AS SHOWN

MATERIAL

- BODY : GLASS-FILLED POLYESTER UL94-V0
  COLOUR : BLACK.
- TRILOK RING : HIGH STRENGTH CuZn ALLOY,
  NICKEL PLATED.
- O-SEAL : NBR

PERFORMANCE CHARACTERISTICS

- OPERATING TEMPERATURE : -55 °C TO +125 °C.
- INSULATION RESISTANCE : 5000 M Ohm MIN.
- TEST POTENTIAL : 2000 V EFF.

PANEL CUT-OUT

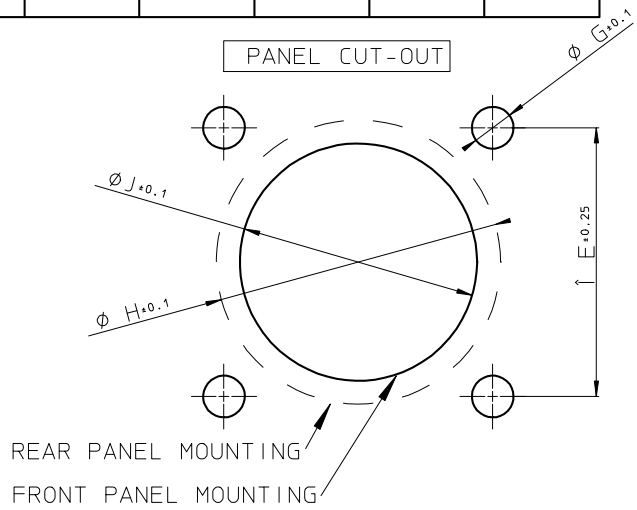

NOTES

1. CONNECTOR ACCEPTS # 16 STRIP FORMED,MACHINED AND SUBMINIATURE COAXIAL PIN AND SOCKET CONTACTS.
2. CONTACTS TO BE ORDERED SEPARATELY : REFER TO TRIM - TRIO CATALOG.
3. FOR OTHER INSERT ARRANGEMENTS SEE BS,C ,201458,000
4. FOR WATERPROTECTED VERSION: ADD "H" TO THE CAT.NO. E.G. CAT.NO.: UTG0128SH

GEN. ST.	01	02	03	04	05	06	07	08	0D	50	60	70	80	90
INT. ST.	10 11 12 13 14 18 20	31 32	33 34	38 39	40 42	43 44	45 46	48	56 70	72 73	75 76	81 82	83 84	88

1DEC ±0,2 1DEC
2DEC ±0,1 2DEC
ANGLES ±1° HOEKEN

WE RESERVE THE RIGHT TO CHANGE DIMENSIONS OR REQUIREMENTS WITHOUT PRIOR NOTICE.

ALL DIMENSIONS IN MM

ALLE AFMETINGEN IN MM

APPR.	DATE	SIGN.
DRAFT	7-6-91	M BUEDS
CHECKED		
PROD. MGR.		
PR.ENG.MGR.		
PR.MGT.MGR.		

REFERENCES / REFERENTIES

FEMALE RECEPTACLE

CAT. No. UTG----S(H)

SOURIAU
Connection Technology

SOURIAU
Route Nationale 23
72470 CHAMPAGNE

SCALE

BS,A ,201458,002 05

NOT EXPORT CONTROLLED

DRAWING NR. CUSTOMER DRAWING REVISION

DIT IS ONZE EIGENDOM EN MAG NOCH NAGEMAAKT, HERDRUKT, OVERGEMAAKT AAN DERDEN, NOCH VOOR FABRIKATIE GEBRUIKT WORDEN, ZONDER ONZE SCHRIFTELIJKE TOELATING. BIJ NIET GEBRUIK IS DE TERUGZENDING VERPLICHT.

THIS IS OUR EXCLUSIVE PROPERTY, IT IS NOT TO BE COPIED, REPRINTED OR DISCLOSED TO A THIRD PARTY, NOR USED FOR MANUFACTURING WITHOUT OUR WRITTEN CONSENT, AND HAS TO BE RETURNED TO US IN CASE OF NO USAGE

BS,A ,201458,002 05