samtec

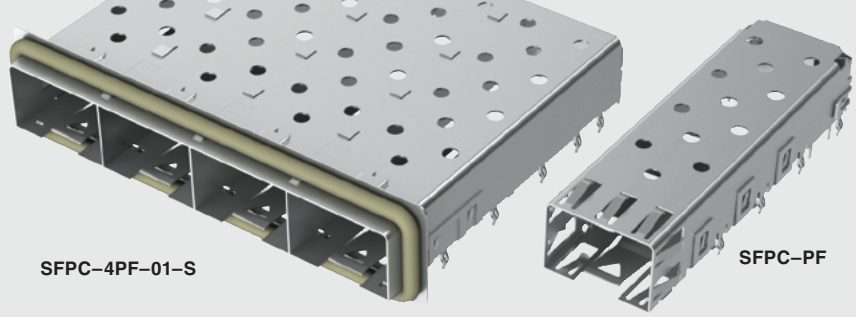

SFPC, SFPK SERIES

SFP CAGES & CAGE/CONNECTOR KITS

Use with:
MECT

SPECIFICATIONS

For complete specifications see www.samtec.com?SFPC or www.samtec.com?SFPK

TYPE	TERMINATION	CONNECTOR PACKAGE
SFPC = Cage **SFPK** = Cage and Connector Kit (SFPC & MECT–110–01–M–D–RA1)	**–PF** = Press-Fit **–SL** = Solder Lead **–PC** = PCI Press-Fit (1° slope for PCI specifications)	SFPK only **–TR** = Tape & Reel (Leave blank for tube packaging)

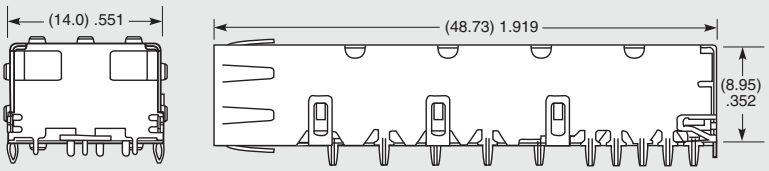

TYPE	NO. OF PORTS	TERMINATION	PANEL MOUNT OPTION	S
SFPC = Cage **SFPK** = Cage and Connector Kit (SFPC & MECT–110–01–M–D–RA1)	**–2** = 1x2 **–4** = 1x4	**PF** = Press-Fit **SL** = Solder Lead **PC** = PCI Press-Fit (1° slope for PCI specifications)	**–01** = Solid Gasket **–02** = Hollow Gasket	**–S** = Single Row

NO. OF PORTS	A	B
–2	(33.70) 1.33	(28.25) 1.11
–4	(62.20) 2.45	(56.50) 2.22

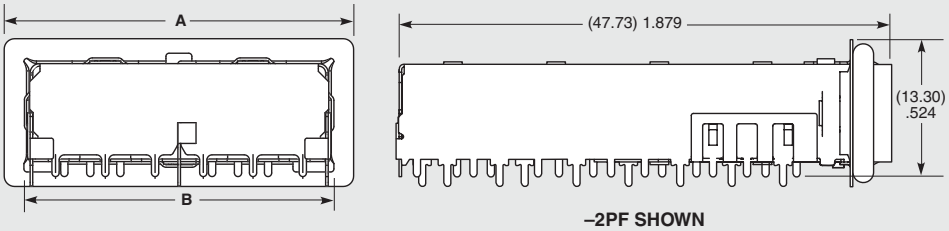

–2PF SHOWN

Note: Some sizes, styles and options are non-standard, non-returnable.

Due to technical progress, all designs, specifications and components are subject to change without notice.

All parts within this catalog are built to Samtec's specifications.
Customer specific requirements must be approved by Samtec and identified in a Samtec customer-specific drawing to apply.