390-003
Water-Tight EMI/RFI Cable Sealing Backshell
with Strain Relief
Type A - Rotatable Coupling - Low Profile

CONNECTOR DESIGNATORS

A-F-H-L-S

ROTATABLE COUPLING

TYPE A OVERALL SHIELD TERMINATION

390 F S 003 M 16 10 E 6

- Product Series
- Connector Designator
- Angle and Profile
  - A = 90°
  - B = 45°
  - S = Straight
- Basic Part No.
- Finish (Table II)
- Shell Size (Table I)
- Cable Entry (Tables X, XI)
- Strain Relief Style (C, E)
- Length: S only (1/2 inch increments: e.g. 6 = 3 inches)

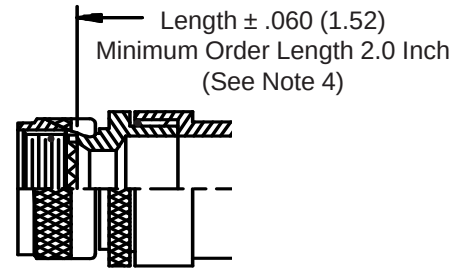

STYLE 2 (STRAIGHT See Note 1)

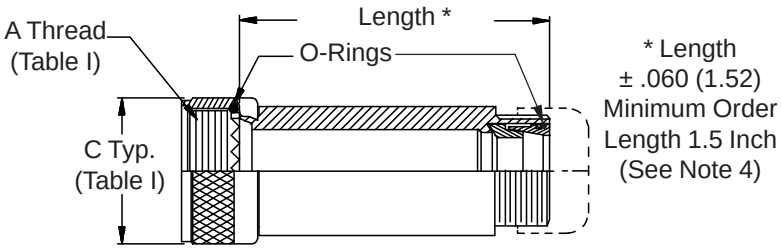

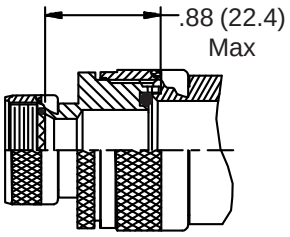

STYLE 2 (45° & 90° See Note 1)

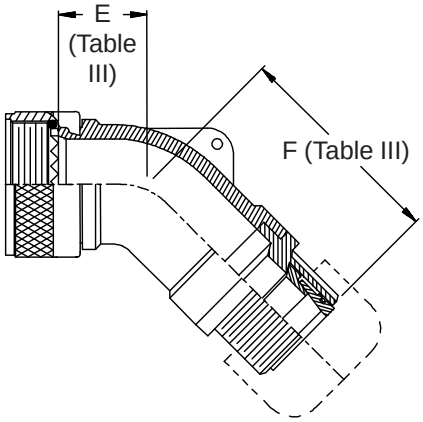

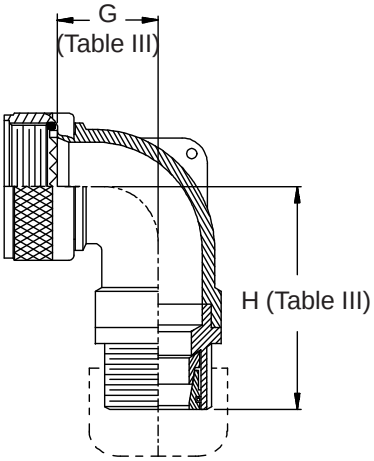

STYLE C
Medium Duty
(Table X)

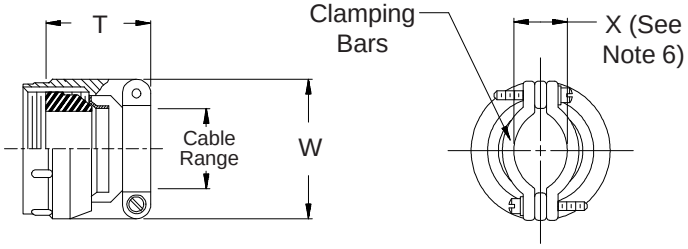

STYLE E
Medium Duty
(Table XI)

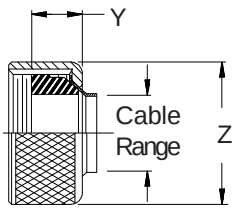

© 2005 Glenair, Inc.
CAGE Code 06324
Printed in U.S.A.

See inside back cover fold-out or pages 13 and 14 for Tables I and II.

TABLE III: ELBOW DIMENSIONS

Shell Size Conn. Desig. A-F-L-S	H	E Max		F Max		G Max		H Max	
08	09	.457	(11.6)	1.602	(40.7)	.500	(12.7)	1.612	(40.9)
10	11	.520	(13.2)	1.662	(42.2)	.595	(15.1)	1.732	(44.0)
12	13	.582	(14.8)	1.722	(43.7)	.610	(15.5)	1.752	(44.5)
14	15	.645	(16.4)	2.062	(52.4)	.700	(17.8)	2.072	(52.6)
16	17	.738	(18.7)	2.172	(55.2)	.885	(22.5)	2.162	(54.9)
18	19	.926	(23.5)	2.362	(60.0)	.975	(24.8)	2.332	(59.2)
20	21	.926	(23.5)	2.362	(60.0)	.975	(24.8)	2.332	(59.2)
22	23	1.020	(25.9)	2.512	(63.8)	1.125	(28.6)	2.442	(62.0)
24	25	1.020	(25.9)	2.512	(63.8)	1.125	(28.6)	2.442	(62.0)
28		1.145	(29.1)	2.562	(65.1)	1.225	(31.1)	2.612	(66.3)
32		1.207	(30.7)	2.662	(67.6)	1.575	(40.0)	2.862	(72.7)
36		1.238	(31.4)	2.752	(69.9)	1.775	(45.1)	2.862	(72.7)

TABLE X: CABLE ENTRY

Dash No.	T Max		W Max		X Ref		Cable Range Min		Cable Range Max	
03	1.219	(31.0)	.812	(20.6)	.135	(3.4)	.156	(4.0)	.219	(5.6)
04	1.219	(31.0)	.937	(23.8)	.203	(5.2)	.188	(4.8)	.312	(7.9)
06	1.219	(31.0)	1.062	(27.0)	.285	(7.2)	.281	(7.1)	.438	(11.1)
08	1.219	(31.0)	1.188	(30.2)	.350	(8.9)	.312	(7.9)	.531	(13.5)
10	1.281	(32.5)	1.312	(33.3)	.390	(9.9)	.375	(9.5)	.625	(15.9)
12	1.281	(32.5)	1.562	(39.7)	.460	(11.7)	.500	(12.7)	.750	(19.1)
16	1.406	(35.7)	1.750	(44.5)	.510	(13.0)	.625	(15.9)	.938	(23.8)
20	1.656	(42.1)	2.250	(57.2)	.695	(17.7)	.938	(23.8)	1.250	(31.8)
24	1.906	(48.4)	2.375	(60.3)	.715	(18.2)	1.000	(25.4)	1.375	(34.9)
28	1.906	(48.4)	2.625	(66.7)	.915	(23.2)	1.250	(31.8)	1.625	(41.3)
32	2.000	(50.8)	2.812	(71.4)	1.070	(27.2)	1.500	(38.1)	1.875	(47.6)

TABLE XI: CABLE ENTRY

Dash No.	Y Max		Z Max		Cable Range Min		Cable Range Max	
03	.739	(18.8)	.812	(20.6)	.156	(4.0)	.219	(5.6)
04	.739	(18.8)	.937	(23.8)	.188	(4.8)	.312	(7.9)
06	.739	(18.8)	1.062	(27.0)	.281	(7.1)	.438	(11.1)
08	.739	(18.8)	1.188	(30.2)	.312	(7.9)	.531	(13.5)
10	.791	(20.1)	1.312	(33.3)	.375	(9.5)	.625	(15.9)
12	.880	(22.4)	1.562	(39.7)	.500	(12.7)	.750	(19.1)
16	.901	(22.9)	1.750	(44.5)	.625	(15.9)	.938	(23.8)
20	1.031	(26.2)	2.250	(57.2)	.938	(23.8)	1.250	(31.8)
24	1.250	(31.8)	2.375	(60.3)	1.000	(25.4)	1.375	(34.9)
28	1.250	(31.8)	2.625	(66.7)	1.250	(31.8)	1.625	(41.3)
32	1.312	(33.3)	2.812	(71.4)	1.500	(38.1)	1.875	(47.6)

1. When maximum cable entry (page 21) is exceeded, Style 2 will be supplied. Dimensions E, F, G and H will not apply. Please consult factory.
2. Metric dimensions (mm) are indicated in parentheses.
3. Cable range is defined as the accommodations range for the wire bundle or cable. Dimensions shown are not intended for inspection criteria.
4. Consult factory for shorter lengths on straight backshells.
5. Interface O-Ring not supplied with connector designator A.
6. Saddles are bottomed on Clamp Ears.

© 2005 Glenair, Inc.