5 Amp Silicon Rectifier 50 to 1000 Volts

Features

- Lead Free Finish/RoHS Compliant (Note1) ("P"Suffix Designates Compliant. See Ordering Information)
- For Surface Mount Applications
- High Current Capability
- Extremely Low Thermal Resistance
- Halogen Free Available Upon Request By Adding Suffix "-HF"
- Epoxy Meets UL 94 V-0 Flammability Rating
- Moisture Sensitivity Level 1

Maximum Ratings

- Operating Junction Temperature Range: -55ºC to +150ºC
- Storage Temperature Range: -55ºC to +150ºC
- Thermal Resistance: 10°C/W Junction to Lead
- Thermal Resistance: 18°C/W Junction to Case
- Thermal Resistance: 50°C/W Junction to Ambient

MCC Part Number	Device Marking	Maximum Recurrent Peak Reverse Voltage	Maximum RMS Voltage	Maximum DC Blocking Voltage
S5AL	S5AL	50V	35V	50V
S5BL	S5BL	100V	70V	100V
S5DL	S5DL	200V	140V	200V
S5GL	S5GL	400V	280V	400V
S5JL	S5JL	600V	420V	600V
S5KL	S5KL	800V	560V	800V
S5ML	S5ML	1000V	700V	1000V

Electrical Characteristics @ 25°C Unless Otherwise Specified

Average Forward Current	$I_{F(AV)}$	5.0A	T_L=75ºC
Peak Forward Surge Current	I_{FSM}	100A	8.3ms,Half Sine
Maximum Instantaneous Forward Voltage	V_F	1.15V	I_{FM}=5.0A; T_J=25ºC*
Maximum DC Reverse Current at Rated DC Blocking Voltage	I_R	5μA 250μA	T_J=25ºC; T_J=125ºC
Typical Junction Capacitance	C_J	40pF	Measured at 1.0MHz, V_R=4.0V

*Pulse Test: Pulse Width 200 μsec, Duty Cycle 2%

Note: 1. High Temperature Solder Exemptions Applied, See EU Directive Annex Notes 7a

SMC (DO-214AB)

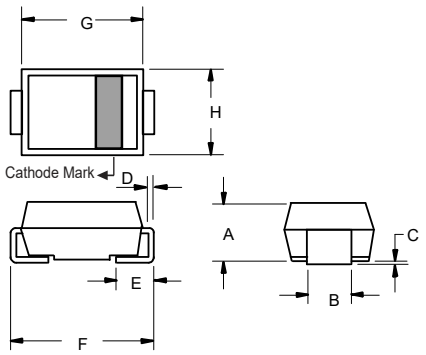

DIMENSIONS					
DIM	INCHES		MM		NOTE
	MIN	MAX	MIN	MAX	
A	0.079	0.103	2.00	2.62	
B	0.108	0.128	2.75	3.25	
C	0.002	0.008	0.051	0.203	
D	0.006	0.012	0.152	0.305	
E	0.030	0.060	0.76	1.52	
F	0.305	0.320	7.75	8.13	
G	0.260	0.280	6.60	7.11	
H	0.220	0.245	5.59	6.22	

Suggested Solder Pad Layout

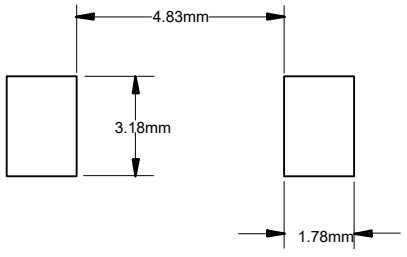

Curve Characteristics

Fig. 1 - Forward Current Derating Curve

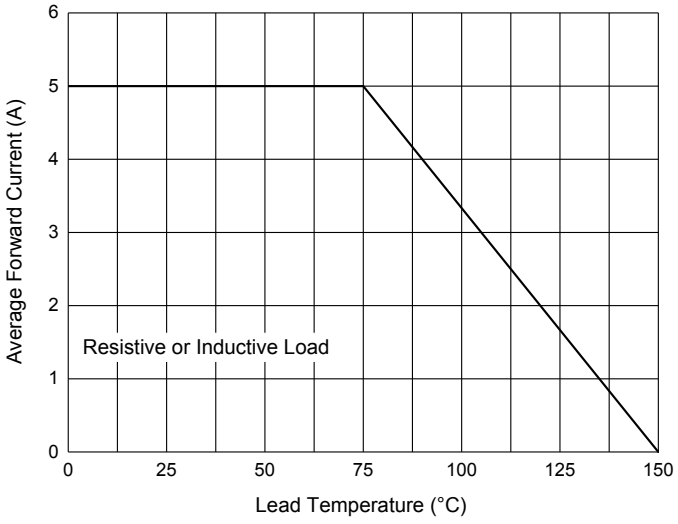

Fig. 2 - Maximum Non-Repetitive Peak Forward Surge Current

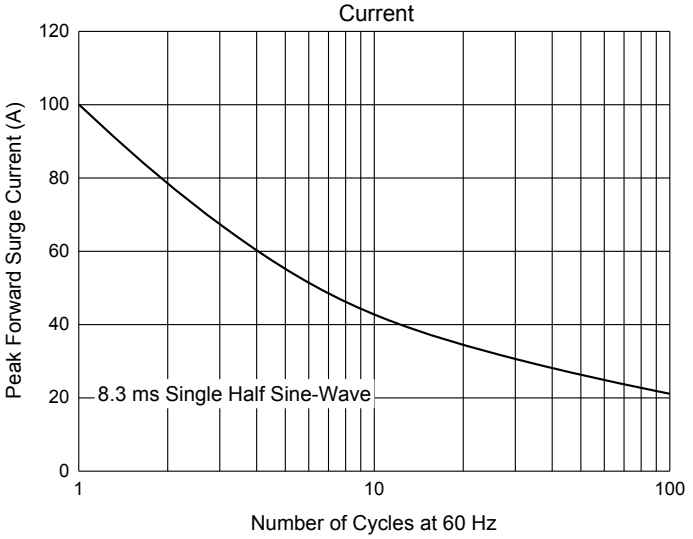

Fig. 3 - Typical Instantaneous Forward Characteristics

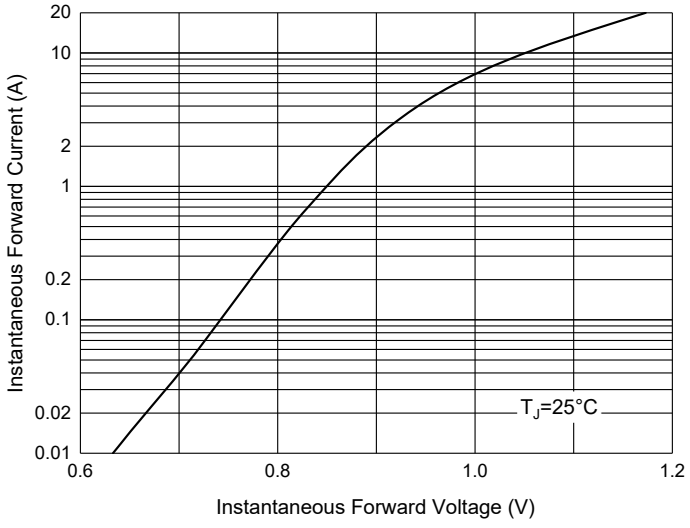

Fig. 4 - Typical Reverse Leakage Characteristics

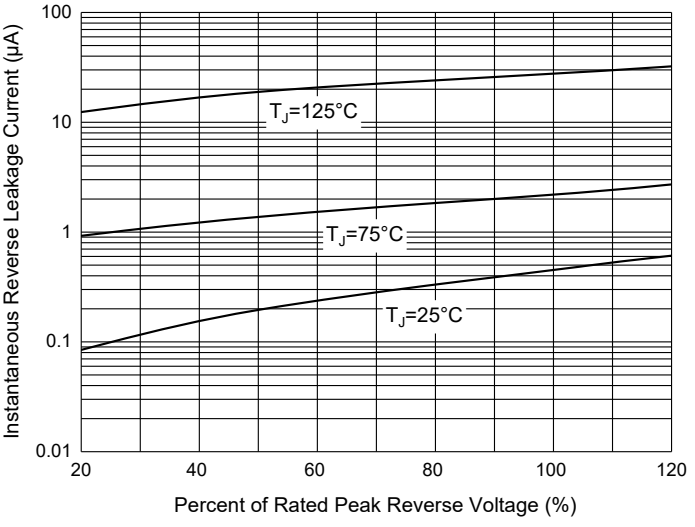

Ordering Information

Device	Packing
Part Number-TP	Tape&Reel: 3Kpcs/Reel

Note : Adding "-HF" Suffix For Halogen Free, eg. Part Number-TP-HF

*****IMPORTANT NOTICE*****

Micro Commercial Components Corp. reserves the right to make changes without further notice to any product herein to make corrections, modifications , enhancements , improvements , or other changes . ***Micro Commercial Components Corp*** . does not assume any liability arising out of the application or use of any product described herein; neither does it convey any license under its patent rights ,nor the rights of others . The user of products in such applications shall assume all risks of such use and will agree to hold ***Micro Commercial Components Corp*** . and all the companies whose products are represented on our website, harmless against all damages.

*****LIFE SUPPORT*****

MCC's products are not authorized for use as critical components in life support devices or systems without the express written approval of Micro Commercial Components Corporation.

*****CUSTOMER AWARENESS*****

Counterfeiting of semiconductor parts is a growing problem in the industry. Micro Commercial Components (MCC) is taking strong measures to protect ourselves and our customers from the proliferation of counterfeit parts. MCC strongly encourages customers to purchase MCC parts either directly from MCC or from Authorized MCC Distributors who are listed by country on our web page cited below. Products customers buy either from MCC directly or from Authorized MCC Distributors are genuine parts, have full traceability, meet MCC's quality standards for handling and storage. **MCC will not provide any warranty coverage or other assistance for parts bought from Unauthorized Sources**. MCC is committed to combat this global problem and encourage our customers to do their part in stopping this practice by buying direct or from authorized distributors.