370-001
Submersible Cable Sealing Backshell
with Strain Relief
Low Profile - Rotatable Coupling

370 F S 001 M 16 10 M 6

- Product Series
- Connector Designator
- Angle and Profile
  - A = 90°
  - B = 45°
  - S = Straight
- Basic Part No.
- Finish (Table II)
- Shell Size (Table I)
- Cable Entry (Tables X, XI)
- Strain Relief Style (H, A, M, D)
- Length: S only (1/2 inch increments: e.g. 6 = 3 inches)

CONNECTOR DESIGNATORS

A-F-H-L-S

ROTATABLE COUPLING

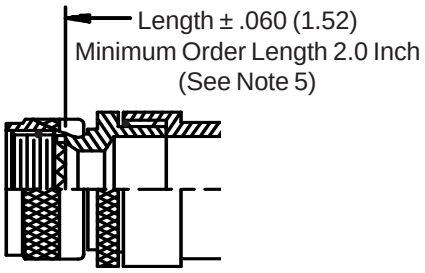

STYLE 2 (STRAIGHT See Note 1)

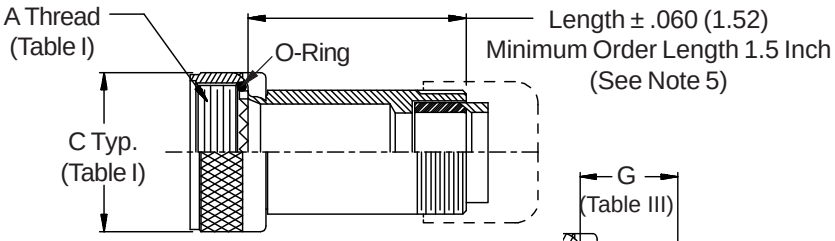

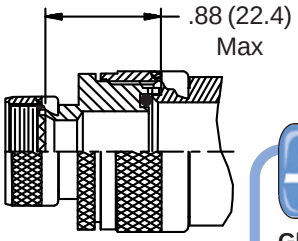

STYLE 2 (45° & 90° See Note 1)

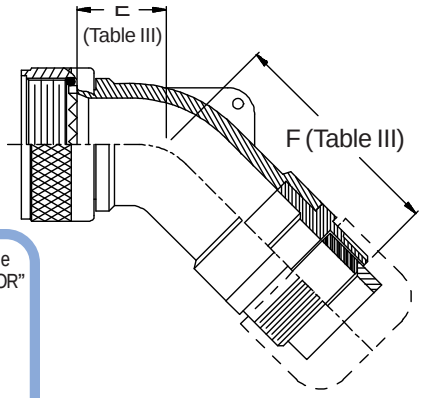

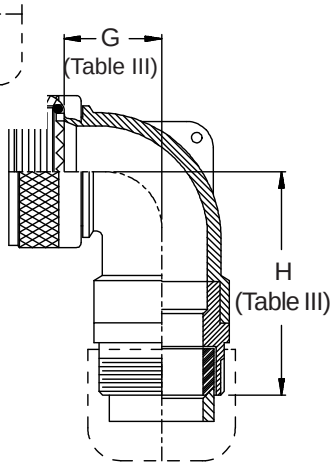

-445 Now Available with the "NESTOR"

Glenair's Non-Detent, Spring-Loaded, Self-Locking Coupling.

Add "-445" to Specify This AS85049 Style "N" Coupling Interface.

STYLE H
Heavy Duty
(Table X)

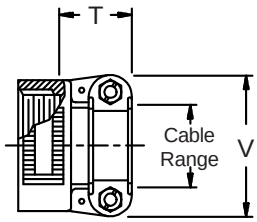

STYLE A
Medium Duty
(Table XI)

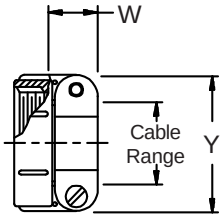

STYLE M
Medium Duty
(Table XI)

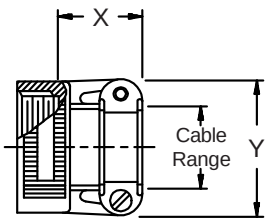

STYLE D
Medium Duty
(Table XI)

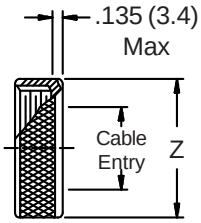

© 2005 Glenair, Inc. CAGE Code 06324 Printed in U.S.A.

370-001
Submersible Cable Sealing Backshell
with Strain Relief
Low Profile - Rotatable Coupling

Glenair®

TABLE III: ELBOW DIMENSIONS

Shell Size Conn. Desig. A-F-L-S	H	E Max		F Max		G Max		H Max	
08	09	.457	(11.6)	1.810	(46.0)	.500	(12.7)	1.820	(46.2)
10	11	.520	(13.2)	1.869	(47.5)	.595	(15.1)	1.940	(49.3)
12	13	.582	(14.8)	1.929	(49.0)	.610	(15.5)	1.960	(49.8)
14	15	.645	(16.4)	2.359	(59.9)	.700	(17.8)	2.369	(60.2)
16	17	.738	(18.7)	2.469	(62.7)	.885	(22.5)	2.459	(62.5)
18	19	.926	(23.5)	2.659	(67.5)	.975	(24.8)	2.629	(66.8)
20	21	.926	(23.5)	2.659	(67.5)	.975	(24.8)	2.629	(66.8)
22	23	1.020	(25.9)	2.872	(72.9)	1.125	(28.6)	2.802	(71.2)
24	25	1.020	(25.9)	2.872	(72.9)	1.125	(28.6)	2.802	(71.2)
28		1.145	(29.1)	2.905	(73.8)	1.225	(31.1)	2.955	(75.1)
32		1.207	(30.7)	3.005	(76.3)	1.575	(40.0)	3.205	(81.4)
36		1.238	(31.4)	3.315	(84.2)	1.775	(45.1)	3.255	(82.7)

1. When maximum cable entry (page 21) is exceeded, Style 2 will be supplied. Dimensions E, F, G and H will not apply. Please consult factory.
2. Metric dimensions (mm) are indicated in parentheses.
3. Cable range is defined as the accommodations range for the wire bundle or cable. Dimensions shown are not intended for inspection criteria.
4. Interface O-Ring not supplied with connector designator A.
5. Consult factory for shorter lengths on straight backshells.

TABLE X: CABLE ENTRY

Dash No.	T Max		V Max		Cable Range Min		Cable Range Max	
04	.780	(19.8)	.957	(24.3)	.125	(3.2)	.312	(7.9)
06	.780	(19.8)	1.145	(29.1)	.250	(6.4)	.437	(11.1)
08	.780	(19.8)	1.332	(33.8)	.387	(9.8)	.562	(14.3)
10	.780	(19.8)	1.332	(33.8)	.350	(8.9)	.625	(15.9)
12	.811	(20.6)	1.551	(39.4)	.500	(12.7)	.750	(19.1)
16	.905	(23.0)	1.770	(45.0)	.625	(15.9)	.937	(23.8)
20	1.092	(27.7)	2.113	(53.7)	.875	(22.2)	1.250	(31.8)
24	1.124	(28.5)	2.363	(60.0)	1.000	(25.4)	1.375	(34.9)
28	1.399	(35.5)	2.770	(70.4)	1.250	(31.8)	1.625	(41.3)
32	1.399	(35.5)	3.020	(76.7)	1.437	(36.5)	1.875	(47.6)

See inside back cover fold-out or pages 13 and 14 for unabridged Tables I and II.

TABLE II: STANDARD FINISHES

GLENAIR SYMBOL	FINISH
B	Cadmium Plate, Olive Drab
C	Anodize, Black
G	Hard Coat, Anodic
M	Electroless Nickel
NF	Cadmium Plate, Olive Drab Over Electroless Nickel

See Inside Back Cover for Additional Finish Options

TABLE XI: CABLE ENTRY

Dash No.	W Max		X Max		Y Max		Z Max		Cable Range Min **		Cable Range Max	
03*	.437	(11.1)	.760	(19.3)	.843	(21.4)	.630	(16.0)	.156	(4.0)	.250	(6.4)
04*	.437	(11.1)	.760	(19.3)	.906	(23.0)	.755	(19.2)	.188	(4.8)	.312	(7.9)
06*	.500	(12.7)	.760	(19.3)	1.093	(27.8)	.942	(23.9)	.281	(7.1)	.438	(11.1)
08	.563	(14.3)	.760	(19.3)	1.187	(30.1)	1.067	(27.1)	.387	(9.8)	.562	(14.3)
10	.563	(14.3)	.760	(19.3)	1.281	(32.5)	1.192	(30.3)	.375	(9.5)	.625	(15.9)
12	.563	(14.3)	.760	(19.3)	1.500	(38.1)	1.380	(35.1)	.438	(11.1)	.750	(19.1)
16	.656	(16.7)	1.073	(27.3)	1.719	(43.7)	1.535	(39.0)	.625	(15.9)	.938	(23.8)
20	.656	(16.7)	1.323	(33.6)	2.062	(52.4)	1.848	(46.9)	.875	(22.2)	1.250	(31.8)
24	.656	(16.7)	1.323	(33.6)	2.312	(58.7)	2.255	(57.3)	1.000	(25.4)	1.375	(34.9)
28	1.188	(30.2)	1.572	(39.9)	2.719	(69.1)	2.505	(63.6)	1.250	(31.8)	1.625	(41.3)
32*	1.187	(30.1)	1.572	(39.9)	2.969	(75.4)	2.755	(70.0)	1.437	(36.5)	1.875	(47.6)
40*	1.125	(28.6)	1.572	(39.9)	3.531	(89.7)	3.255	(82.7)	1.875	(47.6)	2.375	(60.3)

* Not available in Style M clamp. ** Not Applicable Style D

© 2005 Glenair, Inc. CAGE Code 06324 Printed in U.S.A.