# 370-001
## Submersible Cable Sealing Backshell
### with Strain Relief
### Low Profile - Rotatable Coupling

**370 F S 001 M 16 10 M 6**

- Product Series
- Connector Designator
- Angle and Profile
  - A = 90°
  - B = 45°
  - S = Straight
- Basic Part No.
- Finish (Table II)
- Shell Size (Table I)
- Cable Entry (Tables X, XI)
- Strain Relief Style (H, A, M, D)
- Length: S only (1/2 inch increments: e.g. 6 = 3 inches)

**CONNECTOR DESIGNATORS**

**A-F-H-L-S**

**ROTATABLE COUPLING**

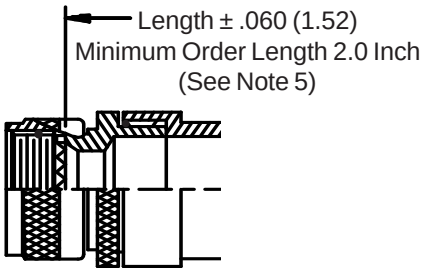


**STYLE 2 (STRAIGHT See Note 1)**

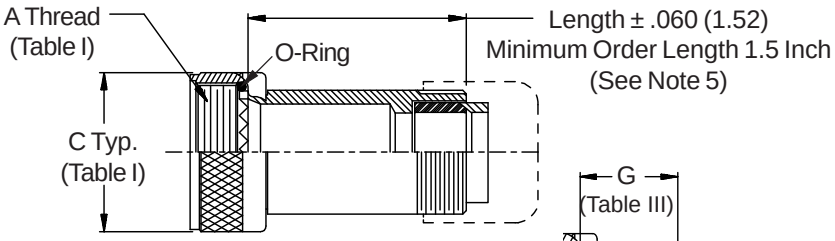


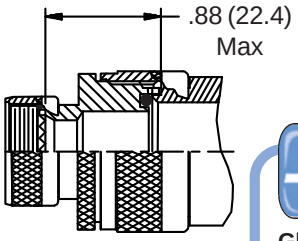


**STYLE 2 (45° & 90° See Note 1)**

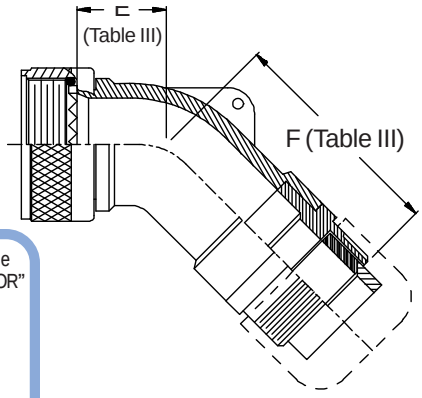


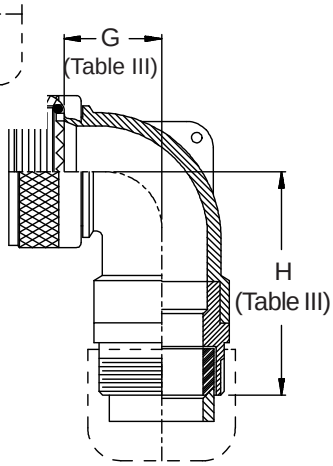


**-445** Now Available with the "NESTOR"

**Glenair's Non-Detent, Spring-Loaded, Self-Locking Coupling.**

**Add "-445" to Specify This AS85049 Style "N" Coupling Interface.**

**STYLE H**
Heavy Duty
(Table X)

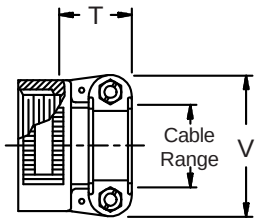


**STYLE A**
Medium Duty
(Table XI)

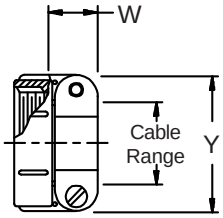


**STYLE M**
Medium Duty
(Table XI)

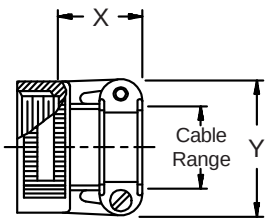


**STYLE D**
Medium Duty
(Table XI)

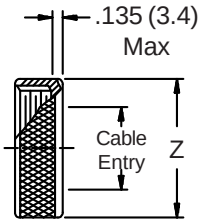


© 2005 Glenair, Inc. CAGE Code 06324 Printed in U.S.A.

# 370-001
## Submersible Cable Sealing Backshell
### with Strain Relief
### Low Profile - Rotatable Coupling

Glenair®

**TABLE III: ELBOW DIMENSIONS**

| Shell Size Conn. Desig. A-F-L-S | H | E Max | | F Max | | G Max | | H Max | |
|---|---|---|---|---|---|---|---|---|---|
| 08 | 09 | .457 | (11.6) | 1.810 | (46.0) | .500 | (12.7) | 1.820 | (46.2) |
| 10 | 11 | .520 | (13.2) | 1.869 | (47.5) | .595 | (15.1) | 1.940 | (49.3) |
| 12 | 13 | .582 | (14.8) | 1.929 | (49.0) | .610 | (15.5) | 1.960 | (49.8) |
| 14 | 15 | .645 | (16.4) | 2.359 | (59.9) | .700 | (17.8) | 2.369 | (60.2) |
| 16 | 17 | .738 | (18.7) | 2.469 | (62.7) | .885 | (22.5) | 2.459 | (62.5) |
| 18 | 19 | .926 | (23.5) | 2.659 | (67.5) | .975 | (24.8) | 2.629 | (66.8) |
| 20 | 21 | .926 | (23.5) | 2.659 | (67.5) | .975 | (24.8) | 2.629 | (66.8) |
| 22 | 23 | 1.020 | (25.9) | 2.872 | (72.9) | 1.125 | (28.6) | 2.802 | (71.2) |
| 24 | 25 | 1.020 | (25.9) | 2.872 | (72.9) | 1.125 | (28.6) | 2.802 | (71.2) |
| 28 | | 1.145 | (29.1) | 2.905 | (73.8) | 1.225 | (31.1) | 2.955 | (75.1) |
| 32 | | 1.207 | (30.7) | 3.005 | (76.3) | 1.575 | (40.0) | 3.205 | (81.4) |
| 36 | | 1.238 | (31.4) | 3.315 | (84.2) | 1.775 | (45.1) | 3.255 | (82.7) |

1. When maximum cable entry (page 21) is exceeded, Style 2 will be supplied. Dimensions E, F, G and H will not apply. Please consult factory.
2. Metric dimensions (mm) are indicated in parentheses.
3. Cable range is defined as the accommodations range for the wire bundle or cable. Dimensions shown are not intended for inspection criteria.
4. Interface O-Ring not supplied with connector designator A.
5. Consult factory for shorter lengths on straight backshells.

**TABLE X: CABLE ENTRY**

| Dash No. | T Max | | V Max | | Cable Range Min | | Cable Range Max | |
|---|---|---|---|---|---|---|---|---|
| 04 | .780 | (19.8) | .957 | (24.3) | .125 | (3.2) | .312 | (7.9) |
| 06 | .780 | (19.8) | 1.145 | (29.1) | .250 | (6.4) | .437 | (11.1) |
| 08 | .780 | (19.8) | 1.332 | (33.8) | .387 | (9.8) | .562 | (14.3) |
| 10 | .780 | (19.8) | 1.332 | (33.8) | .350 | (8.9) | .625 | (15.9) |
| 12 | .811 | (20.6) | 1.551 | (39.4) | .500 | (12.7) | .750 | (19.1) |
| 16 | .905 | (23.0) | 1.770 | (45.0) | .625 | (15.9) | .937 | (23.8) |
| 20 | 1.092 | (27.7) | 2.113 | (53.7) | .875 | (22.2) | 1.250 | (31.8) |
| 24 | 1.124 | (28.5) | 2.363 | (60.0) | 1.000 | (25.4) | 1.375 | (34.9) |
| 28 | 1.399 | (35.5) | 2.770 | (70.4) | 1.250 | (31.8) | 1.625 | (41.3) |
| 32 | 1.399 | (35.5) | 3.020 | (76.7) | 1.437 | (36.5) | 1.875 | (47.6) |

**See inside back cover fold-out or pages 13 and 14 for unabridged Tables I and II.**

**TABLE II: STANDARD FINISHES**

| GLENAIR SYMBOL | FINISH |
|---|---|
| B | Cadmium Plate, Olive Drab |
| C | Anodize, Black |
| G | Hard Coat, Anodic |
| M | Electroless Nickel |
| NF | Cadmium Plate, Olive Drab Over Electroless Nickel |

See Inside Back Cover for Additional Finish Options

**TABLE XI: CABLE ENTRY**

| Dash No. | W Max | | X Max | | Y Max | | Z Max | | Cable Range Min ** | | Cable Range Max | |
|---|---|---|---|---|---|---|---|---|---|---|---|---|
| 03* | .437 | (11.1) | .760 | (19.3) | .843 | (21.4) | .630 | (16.0) | .156 | (4.0) | .250 | (6.4) |
| 04* | .437 | (11.1) | .760 | (19.3) | .906 | (23.0) | .755 | (19.2) | .188 | (4.8) | .312 | (7.9) |
| 06* | .500 | (12.7) | .760 | (19.3) | 1.093 | (27.8) | .942 | (23.9) | .281 | (7.1) | .438 | (11.1) |
| 08 | .563 | (14.3) | .760 | (19.3) | 1.187 | (30.1) | 1.067 | (27.1) | .387 | (9.8) | .562 | (14.3) |
| 10 | .563 | (14.3) | .760 | (19.3) | 1.281 | (32.5) | 1.192 | (30.3) | .375 | (9.5) | .625 | (15.9) |
| 12 | .563 | (14.3) | .760 | (19.3) | 1.500 | (38.1) | 1.380 | (35.1) | .438 | (11.1) | .750 | (19.1) |
| 16 | .656 | (16.7) | 1.073 | (27.3) | 1.719 | (43.7) | 1.535 | (39.0) | .625 | (15.9) | .938 | (23.8) |
| 20 | .656 | (16.7) | 1.323 | (33.6) | 2.062 | (52.4) | 1.848 | (46.9) | .875 | (22.2) | 1.250 | (31.8) |
| 24 | .656 | (16.7) | 1.323 | (33.6) | 2.312 | (58.7) | 2.255 | (57.3) | 1.000 | (25.4) | 1.375 | (34.9) |
| 28 | 1.188 | (30.2) | 1.572 | (39.9) | 2.719 | (69.1) | 2.505 | (63.6) | 1.250 | (31.8) | 1.625 | (41.3) |
| 32* | 1.187 | (30.1) | 1.572 | (39.9) | 2.969 | (75.4) | 2.755 | (70.0) | 1.437 | (36.5) | 1.875 | (47.6) |
| 40* | 1.125 | (28.6) | 1.572 | (39.9) | 3.531 | (89.7) | 3.255 | (82.7) | 1.875 | (47.6) | 2.375 | (60.3) |

* Not available in Style M clamp. ** Not Applicable Style D

© 2005 Glenair, Inc. CAGE Code 06324 Printed in U.S.A.