DRAWING MADE IN THIRD ANGLE PROJECTION

THIS DRAWING IS UNPUBLISHED. RELEASED FOR PUBLICATION ,1988.

© COPYRIGHT 1988 BY AMP INCORPORATED. ALL INTERNATIONAL RIGHTS RESERVED.

| PROD CODE | LOC | DIST |
|---|---|---|
| S327 | DF | F0 |

| P | F | ZONE | LTR | DESCRIPTION | DATE | APPD |
|---|---|---|---|---|---|---|
| | | | C | REDWN PER DF-2766 TW | 4-90 | DS |
| | ✓ | | D | REV PER DF-5332 AG | 1-92 | DG |
| | ✓ | | E | REV PER DF-5470 TA | 2-10-92 | DG |
| | ✓ | | F | REV PER 0600-1388-93 TA | 5-4-94 | DG |

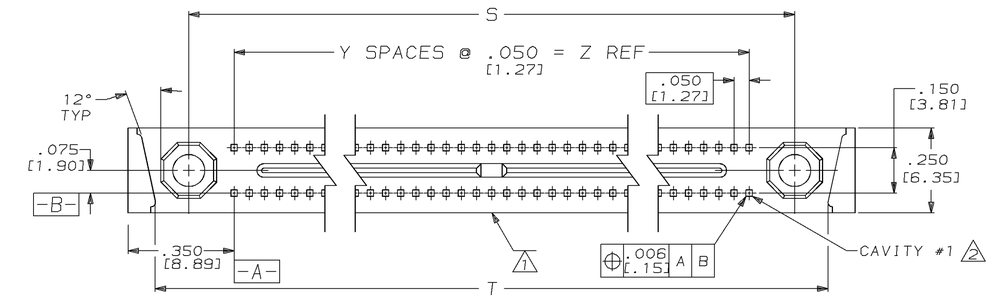


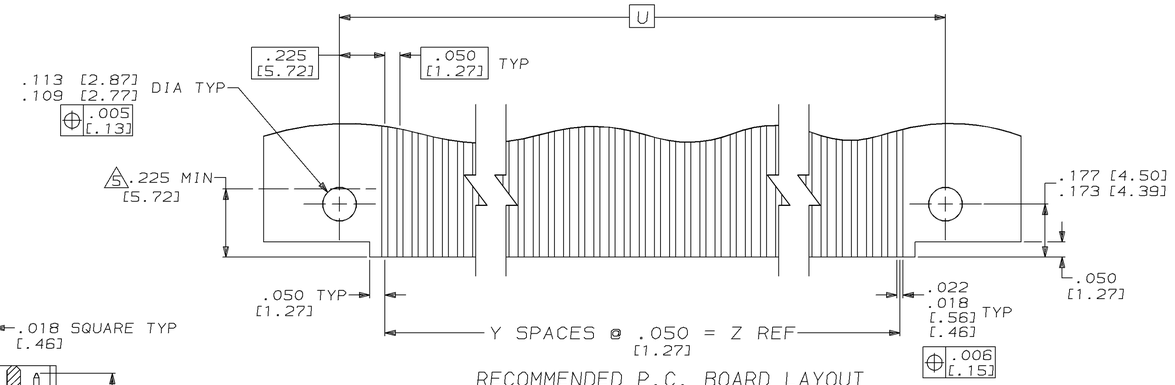


RECOMMENDED P.C. BOARD LAYOUT

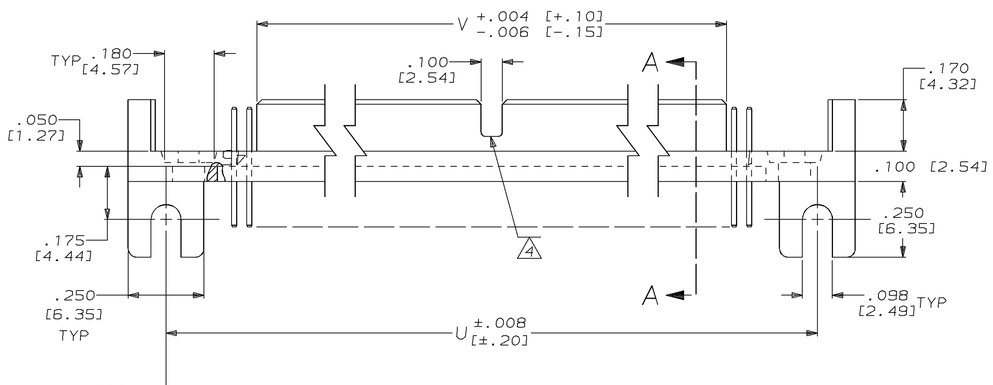


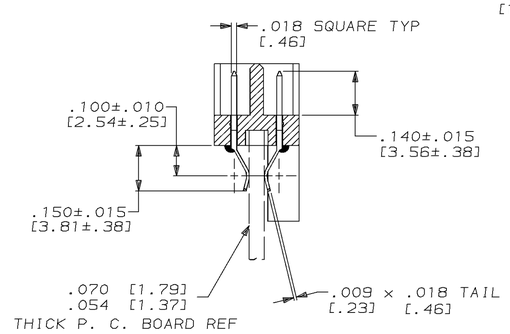


SECTION A-A

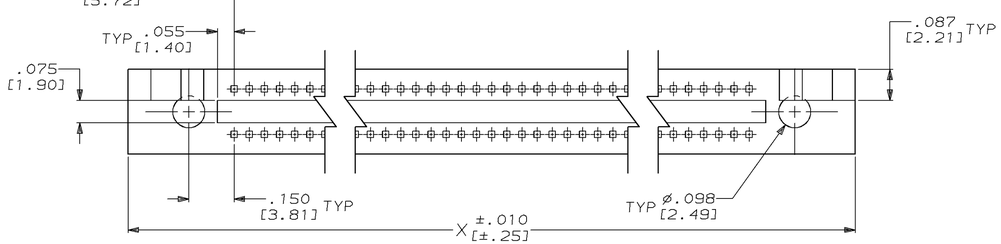


| | | | | | | | | | | | | |
|---|---|---|---|---|---|---|---|---|---|---|---|---|
| 6 | M55302/118-11 | 1 - 64 | 3.150 [80.01] | 63 | 3.850 [97.79] | 2.990 [75.95] | 3.600 [91.44] | 3.670 [93.22] | 3.450 [87.63] | 128 | 2-530744-2 |
| 6 | M55302/118-10 | 1 - 55 | 2.700 [68.58] | 54 | 3.400 [86.36] | 2.540 [64.52] | 3.150 [80.01] | 3.220 [81.79] | 3.000 [76.20] | 110 | 2-530744-1 |
| 6 | M55302/118-09 | 1 - 50 | 2.450 [62.23] | 49 | 3.150 [80.01] | 2.290 [58.17] | 2.900 [73.66] | 2.970 [75.44] | 2.750 [69.85] | 100 | 2-530744-0 |
| 6 | M55302/118-08 | 1 - 45 | 2.200 [55.88] | 44 | 2.900 [73.66] | 2.040 [51.82] | 2.650 [67.31] | 2.720 [69.09] | 2.500 [63.50] | 90 | 1-530744-9 |
| 6 | M55302/118-07 | 1 - 40 | 1.950 [49.53] | 39 | 2.650 [67.31] | 1.790 [45.47] | 2.400 [60.96] | 2.470 [62.74] | 2.250 [57.15] | 80 | 1-530744-8 |
| 6 | M55302/118-06 | 1 - 35 | 1.700 [43.18] | 34 | 2.400 [60.96] | 1.540 [39.12] | 2.150 [54.61] | 2.220 [56.39] | 2.000 [50.80] | 70 | 1-530744-7 |
| 6 | M55302/118-05 | 1 - 30 | 1.450 [36.83] | 29 | 2.150 [54.61] | 1.290 [32.77] | 1.900 [48.26] | 1.970 [50.04] | 1.750 [44.45] | 60 | 1-530744-6 |
| 6 | M55302/118-04 | 1 - 25 | 1.200 [30.48] | 24 | 1.900 [48.26] | 1.040 [26.42] | 1.650 [41.91] | 1.720 [43.69] | 1.500 [38.10] | 50 | 1-530744-5 |
| 6 | M55302/118-03 | 1 - 20 | .950 [24.13] | 19 | 1.650 [41.91] | .790 [20.07] | 1.400 [35.56] | 1.470 [37.34] | 1.250 [31.75] | 40 | 1-530744-4 |
| 6 | M55302/118-02 | 1 - 15 | .700 [17.78] | 14 | 1.400 [35.56] | .540 [13.72] | 1.150 [29.21] | 1.220 [30.99] | 1.000 [25.40] | 30 | 1-530744-3 |
| 6 | M55302/118-01 | 1 - 10 | .450 [11.43] | 9 | 1.150 [29.21] | .290 [7.37] | .900 [22.86] | .970 [24.64] | .750 [19.05] | 20 | 1-530744-2 |
| | | | | | | | | | | | |
| | | | | | | SUPSD BY 2-530744-2 | | | | | 1-530744-1 |
| | | | | | | SUPSD BY 2-530744-1 | | | | | 1-530744-0 |
| | | | | | | SUPSD BY 2-530744-0 | | | | | 530744-9 |
| | | | | | | SUPSD BY 1-530744-9 | | | | | 530744-8 |
| | | | | | | SUPSD BY 1-530744-8 | | | | | 530744-7 |
| | | | | | | SUPSD BY 1-530744-7 | | | | | 530744-6 |
| | | | | | | SUPSD BY 1-530744-6 | | | | | 530744-5 |
| | | | | | | SUPSD BY 1-530744-5 | | | | | 530744-4 |
| | | | | | | SUPSD BY 1-530744-4 | | | | | 530744-3 |
| | | | | | | SUPSD BY 1-530744-3 | | | | | 530744-2 |
| | | | | | | SUPSD BY 1-530744-2 | | | | | 530744-1 |
| HSG MAT'L | MILITARY PART NUMBER | 2 | Z | Y | X | V | U | T | S | NO. OF POSN. | PART NUMBER |

1. AMP, 00779, AMP PART NUMBER, MILITARY PART NUMBER AND DATE CODE MARKED IN THIS APPROXIMATE AREA.
2. NUMBERS INDICATING END POSITIONS MARKED THIS SIDE ONLY.
3. MEETS ALL APPLICABLE REQUIREMENTS OF MIL-C-55302.
4. SLOT IN TONGUE IS NOT APPLICABLE FOR 20 THRU 50 POSITION.
5. MINIMUM PAD LENGTH ON CIRCUIT BOARD.
6. HOUSING MATERIAL: LIQUID CRYSTAL POLYMER PER MIL-M-24519, GLCP-30F; COLOR: GRAY.
7. CONTACT FINISH: PLATED GOLD .000050 THICK IN CONTACT AREA, PLATED TIN-LEAD .000100 THICK ON TAILS, ALL OVER NICKEL .000030 THICK.

DO NOT SCALE PRINT.
UNLESS SPECIFIED
DIMENSIONS IN INCHES [mm]
TOLERANCES ON :
2 PLC DEC ± ——
3 PLC DEC ±.005 [.013 ]
ANGLES ± 0° 30'

MATERIAL
CONTACT: BRASS
HOUSING: 6 7

FINISH
CONTACT: 8

DR 3-12-90 T.WIEST
CHK 4-1-90 D. STONER
APPD 4-1-90 D. STONER
APPD 4-1-90 D. STONER
PRODUCT SPEC –
APPLICATION SPEC –
WEIGHT –

AMP | AMP INCORPORATED Harrisburg, Pa. 17105

NAME
PIN HEADER ASSEMBLY, MINI BOX, CARD EXTENDER, MILITARY

SIZE D | FSCM NO 00779 | DRAWING NO 530744

SCALE 4:1 | SHEET 1 OF 1

CUSTOMER DRAWING

AMP 1756-3 REV 3-87

04 MAY 1994 11:58:38 AMP34874 <A91288-DEPT0030>U.BOX