REV.	ECN NO.	DATE	SIGN	DESCRIPTION
C	LE315A0032~34	2015/09/19	Joyy	Update The Drawing
D	C180139	2018/11/26	Mafei	Remove The Shrink Tube.
E	C191730	2019/10/07	Vicky	Update Code & Wire Tolerance

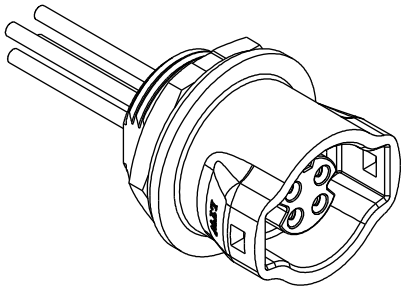

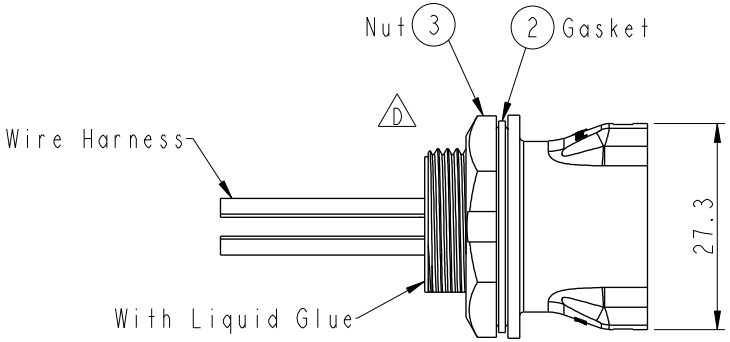

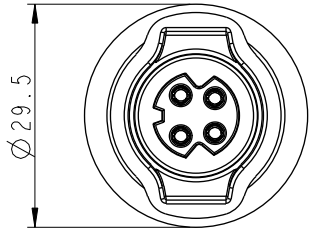

ALTW
CONFIDENTIAL
2019-10-07
R&D DEPT.

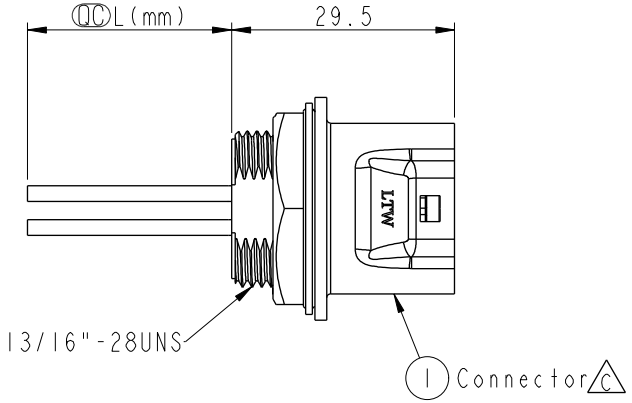

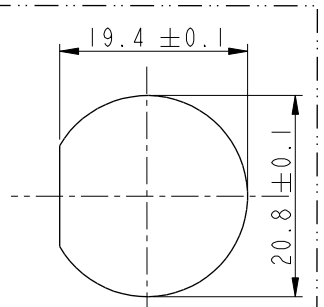

Recommended Panel Cut-out

Note:
* QC Important Dimension To Check.
* Waterproof Rate: IP67
* Housing: M-PPE, Black.
* Female Pin: Copper Alloy,Gold Plated.
* Gasket: Silicone, Black.
* Screw Nut: Nylon+GF,Black.
* Wire Harness: UL1015 16#
* Panel Thickness Max: 5.0mm
* Recommended Nut Torque: 4~7 kgf.cm
E * Wire harness Tolerance: 100 ±10mm
101~300 ±15mm
301~1000 ±20mm
* Prohibiting the use of place in oils

UNIT: mm	TITLE: MIDDLE PANEL RBL F CONN F PIN	Amphenol LTW 安費諾亮泰企業股份有限公司	ITEM NO	DRAWN BY: Mafei	DATE: 2018-11-26
TOLERANCE: ±0.5mm	SCALE: 1:1 / SIZE: A4 / SHEET 1 OF 2		DWG NO: CB-XXRFFC-RC7AXX	CHECKED BY: Jerry	DATE: 2018-11-26
	REV.: E / WC-REV.: A.3	QC: Inspection item	CUSTOMER: ALTW	APPROVED BY: Max	DATE: 2018-11-26

THIS DOCUMENT IS SUBJECT TO CHANGE WITHOUT NOTICE. IT IS CONFIDENTIAL AND A PROPERTY OF Amphenol LTW. DISCLOSURE TO THIRD PARTY HAS TO BE AUTHORIZED BY Amphenol LTW.

B

CB-XXRFFC-RC7AXX

- Middle Size Current Rating 10A
- XX:No. Of Pin(Pin 數)
- R:Panel Rear Mounting(後鎖嵌面板式)
- F:Female Connector(母座)
- F:Female Pin(母Pin)
- C:CrimpType(夾線組裝式)
- 10 :100mm
- 15 :150mm
- 20 :200mm
- ∫
- E A0 :1000mm
  Cable Pitch Unit:50mm
  Wire Length(L):100~1000mm
- A:UL 1015
- 7:IP67(防水等級 67)
- C:Circular(圓座)
- R:Snap in With Latch(彈臂卡合式)

ALTW
CONFIDENTIAL
2019-10-07
R&D DEPT.

	2Pin	3Pin	4Pin
Pin Out	4 -- 3 Red 紅 2 -- 1 Black 黑	4 Green 綠 3 Red 紅 2 -- 1 Black 黑	4 Orange 橙 3 Red 紅 2 Brown 棕 1 Black 黑
Pin Assignments Front View	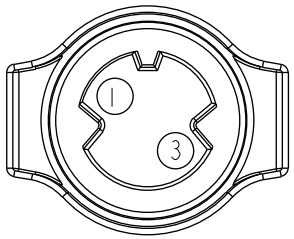	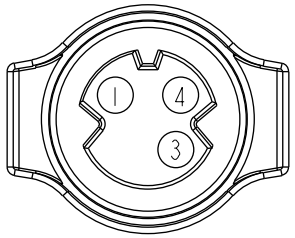	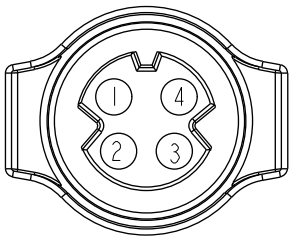

UNIT:mm	TITLE MIDDLE PANEL RBL F CONN F PIN	Amphenol LTW 安費諾亮泰企業股份有限公司	ITEM NO	DRAWN BY Mafei	DATE 2018-11-26
TOLERANCE ±0.5mm	SCALE 1:1 / SIZE A4 / SHEET 2 OF 2		DWG NO CB-XXRFFC-RC7AXX	CHECKED BY Jerry	DATE 2018-11-26
	REV. E / WC-REV. A.3	QC:Inspection item	CUSTOMER ALTW	APPROVED BY Max	DATE 2018-11-26

THIS DOCUMENT IS SUBJECT TO CHANGE WITHOUT NOTICE. IT IS CONFIDENTIAL AND A PROPERTY OF Amphenol LTW. DISCLOSURE TO THIRD PARTY HAS TO BE AUTHORIZED BY Amphenol LTW.