## Description

The APX809S/810S are used for microprocessor (µP) supervisory circuits to monitor the power supplies in µP and digital systems. They provide excellent circuit reliability and low cost by eliminating external components and adjustments when used with +5V, +3.3V, +3.0V and +2.5V powered circuits.

These circuits perform a single function: they assert a reset signal whenever the $V_{CC}$ supply voltage declines below a preset threshold, keeping it asserted for at least 240ms after $V_{CC}$ has risen above the reset threshold. Reset thresholds suitable for operation with a variety of supply voltages are available. The APX809S/810S have push pull outputs. The APX809S has an active low $\overline{\text{RESET}}$ output, while the APX810S has an active high RESET output. The reset comparator is designed to ignore fast transients on $V_{CC}$, and the outputs are guaranteed to be in the correct logic state for $V_{CC}$ down to 1V. Low supply current makes the APX809S/810S ideal for use in portable equipment. The APX809S/810S is available in a 3-pin SOT23 package.

## Features

- Precision Monitoring of +2.5V, +3V, +3.3V and +5V Power-Supply Voltages
- Fully Specified Over-temperature
- Available in Three Output Configurations
- Push-Pull $\overline{\text{RESET}}$ Active Low (APX809S)
- Push-Pull RESET Active High (APX810S)
- 200ms Typ Power-On Reset Pulse Width
- 7µA Supply Current (Typ.)
- Guaranteed Reset Valid to $V_{CC}$ = +1V
- No External Components
- SOT23 Available in "Green" Molding Compound (No Br, Sb)
- **Totally Lead-Free & Fully RoHS Compliant (Notes 1 & 2)**
- **Halogen and Antimony Free. "Green" Device (Note 3)**

## Pin Assignments

**(Top View)**

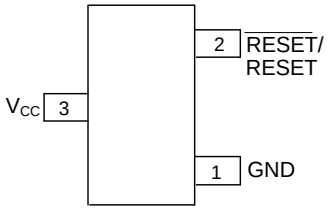


**SOT23 (SA)**

**(Top View)**

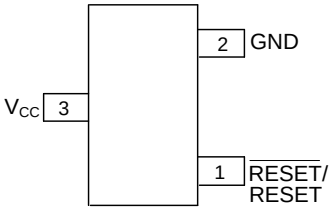


**SOT23 (SR)**

## Applications

- Computers
- Controllers
- Intelligent Instruments
- Critical µP and µC Power Monitoring
- Portable/Battery Powered Equipment

Notes: 1. No purposely added lead. Fully EU Directive 2002/95/EC (RoHS), 2011/65/EU (RoHS 2) & 2015/863/EU (RoHS 3) compliant.
2. See https://www.diodes.com/quality/lead-free/ for more information about Diodes Incorporated's definitions of Halogen- and Antimony-free, "Green" and Lead-free.
3. Halogen- and Antimony-free "Green" products are defined as those which contain <900ppm bromine, <900ppm chlorine (<1500ppm total Br + Cl) and <1000ppm antimony compounds.

## Typical Applications Circuit

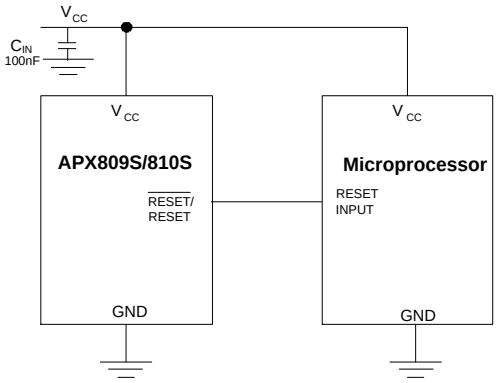



© Diodes Incorporated

## Pin Descriptions

| Pin Number | | Pin Name | Function |
|---|---|---|---|
| SOT23 (SA) | SOT23 (SR) | | |
| 3 | 3 | $V_{CC}$ | Operating Voltage Input |
| 2 | 1 | $\overline{RESET}$/RESET | Reset Output Pin |
| 1 | 2 | GND | Ground |

## Functional Block Diagram

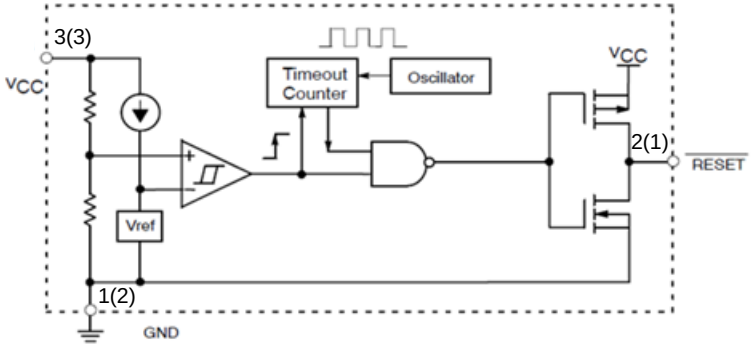


A(B)
A for SOT23 (SA)
B for SOT23 (SR)

APX809 S Series Complementary Active-Low Output

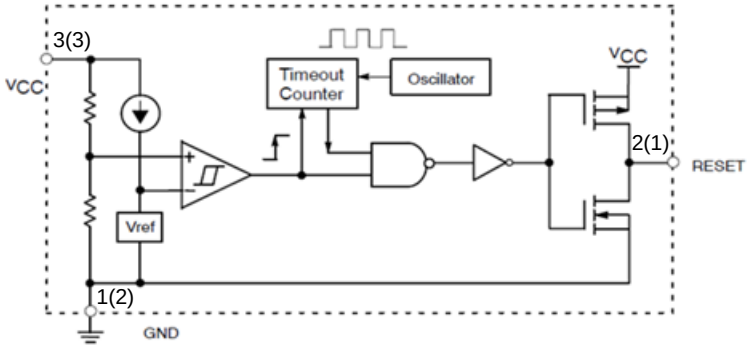


A(B)
A for SOT23 (SA)
B for SOT23 (SR)

APX810 S Series Complementary Active-High Output


© Diodes Incorporated

## Absolute Maximum Ratings (@$T_A$ = +25°C, unless otherwise specified.) (Note 4)

| Symbol | Parameter | | Rating | Unit |
|---|---|---|---|---|
| $V_{CC}$ | Supply Voltage | | -0.3 to 6.0 | V |
| $V_{RESET}$ | $\overline{RESET}$/RESET Voltage | | -0.3 to 6.0 | V |
| $I_{CC}$ | Input Current | | 20 | mA |
| $I_O$ | Output Current | | 20 | mA |
| $\theta_{JA}$ | Thermal Resistance Junction-to-Ambient | SOT23 | 232 | °C/W |
| $\theta_{JC}$ | Thermal Resistance Junction-to-Case | SOT23 | 87 | °C/W |
| ESD | HBM (Human Body Model) | | 6,000 | V |
| | MM (Machine Model) | | 600 | V |
| $T_J$ | Junction Temperature Range | | -40 to +150 | °C |
| $T_{STG}$ | Storage Temperature Range | | -65 to +150 | °C |

Note: 4. Stresses greater than those listed under "Absolute Maximum Ratings" may cause permanent damage to the device. These are stress ratings only, and functional operation of the device at these or any other conditions beyond those indicated under "Recommended Operating Conditions" is not implied. Exposure to "Absolute Maximum Ratings" for extended periods may affect device reliability.

## Recommended Operating Conditions (@$T_A$ = +25°C, unless otherwise specified.)

| Symbol | Parameter | Min | Max | Unit |
|---|---|---|---|---|
| $T_A$ | Operating Ambient Temperature Range | -40 | +125 | °C |
| $V_{CC}$ | Supply Voltage | 1.0 | 5.5 | V |
| $V_{RESET}$ | $\overline{RESET}$ /RESET Output Voltage | 0 | 5.5 | V |


© Diodes Incorporated

## Electrical Characteristics (@$T_A$ = +25°C, unless otherwise specified.)

| Symbol | Parameter | | Test Conditions | Min | Typ | Max | Unit |
|---|---|---|---|---|---|---|---|
| $I_{CC}$ | Supply Current | | $V_{TH}$ + 0.2V | — | 7 | 16 | µA |
| $V_{TH}$ | APX809SXX/810SXX-23 | | $T_A$ = +25°C | 2.22 | 2.25 | 2.29 | V |
| | APX809SXX/810SXX-26 | | | 2.59 | 2.63 | 2.67 | |
| | APX809SXX/810SXX-29 | | | 2.89 | 2.93 | 2.97 | |
| | APX809SXX/810SXX-31 | | | 3.04 | 3.08 | 3.12 | |
| | APX809SXX/810SXX-40 | | | 3.94 | 4.00 | 4.05 | |
| | APX809SXX/810SXX-44 | | | 4.32 | 4.38 | 4.44 | |
| | APX809SXX/810SXX-46 | | | 4.57 | 4.63 | 4.69 | |
| $\frac{\Delta V_{TH}}{V_{TH} \times \Delta T}$ | Reset Threshold Voltage Temperature Coefficient | | $T_A$ = -40 to +125°C | — | 30 | — | ppm/°C |
| $t_S$ | $V_{CC}$ Drop to $\overline{RESET}$ Delay | | $V_{CC} = V_{TH}$ to ($V_{TH}$ - 100mV) | — | 20 | — | µs |
| $t_{DELAY}$ | Reset Active Timeout Period | APX809S00/810S00-XX | $V_{CC} \geq 1.02 \times V_{TH}$ | 1 | 1.7 | 3.3 | ms |
| | | APX809S05/810S05-XX | | 20 | 50 | 70 | |
| | | APX809S/810S-XX | | 140 | 240 | 280 | |
| $V_{OL}$ | $\overline{RESET}$ Output Voltage Low (APX809S) | | $V_{CC} = V_{TH}$ - 0.2V, $I_{SINK}$ = 1.2mA | — | — | 0.3 | V |
| | | | $V_{CC} = V_{TH}$ - 0.2V, $I_{SINK}$ = 3.2mA | — | — | 0.4 | |
| | | | $V_{CC}$ > 1.0V, $I_{SINK}$ = 50µA | — | — | 0.3 | |
| $V_{OH}$ | $\overline{RESET}$ Output Voltage-High (APX809S) | | $V_{CC} > V_{TH}$ + 0.2V, $I_{SOURCE}$ = 500µA | $0.8V_{CC}$ | — | — | V |
| | | | $V_{CC} > V_{TH}$ + 0.2V, $I_{SOURCE}$ = 800µA | $V_{CC}$ - 1.5 | — | — | |
| $V_{OL}$ | RESET Output Voltage-Low (APX810S) | | $V_{CC} = V_{TH}$ + 0.2V, $I_{SINK}$ = 1.2mA | — | — | 0.3 | V |
| | | | $V_{CC} = V_{TH}$ + 0.2V, $I_{SINK}$ = 3.2mA | — | — | 0.4 | |
| $V_{OH}$ | RESET Output Voltage-High (APX810S) | | 1.8V < $V_{CC}$ < $V_{TH}$ - 0.2, $I_{SOURCE}$ = 150µA | $0.8V_{CC}$ | — | — | V |


© Diodes Incorporated

## Performance Characteristics

### RESET Threshold Voltage vs. Temperature

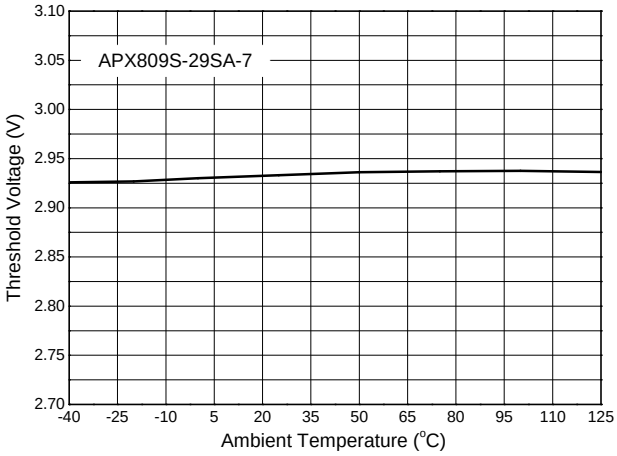


### RESET Active Timeout Period vs. Temperature

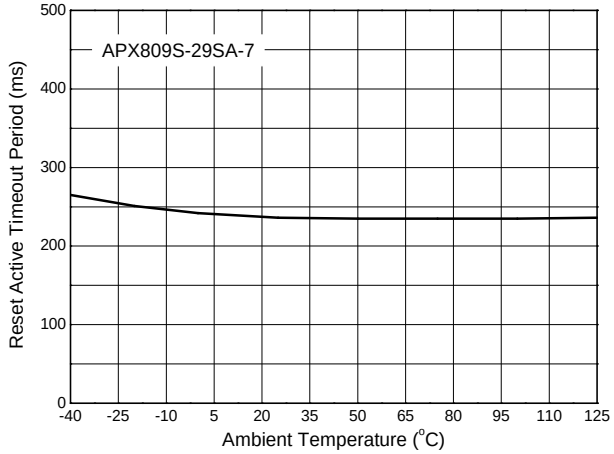


### Supply Current vs. Temperature

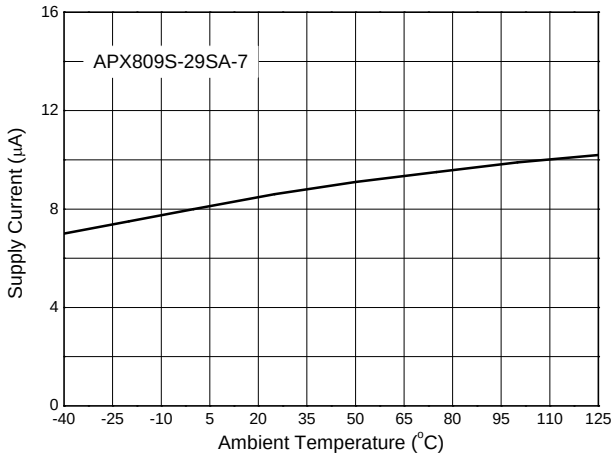


### Output Voltage vs. Input Voltage

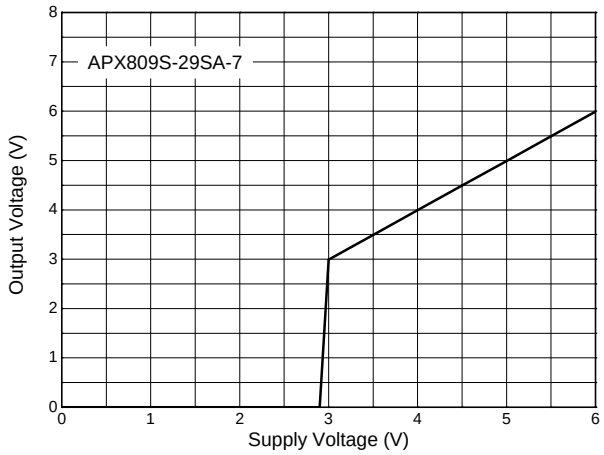


### Output Sink Current vs. Input Voltage

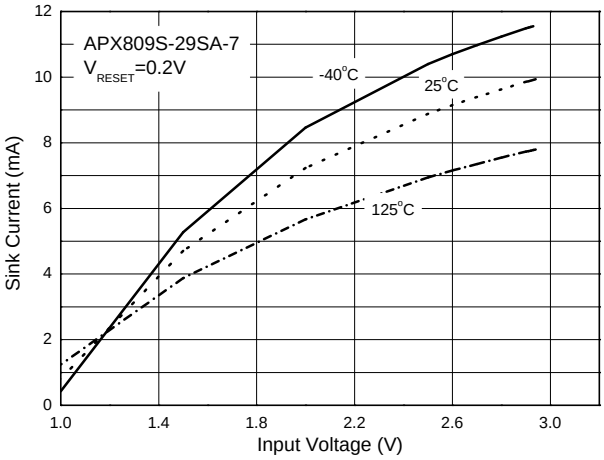


### Output Sink Current vs. Input Voltage

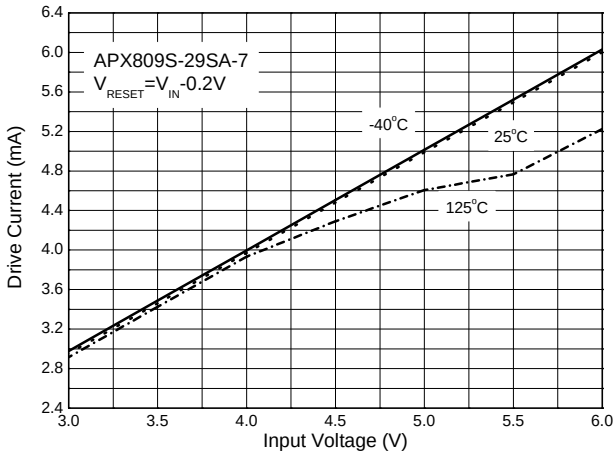



© Diodes Incorporated

## Timing Diagram

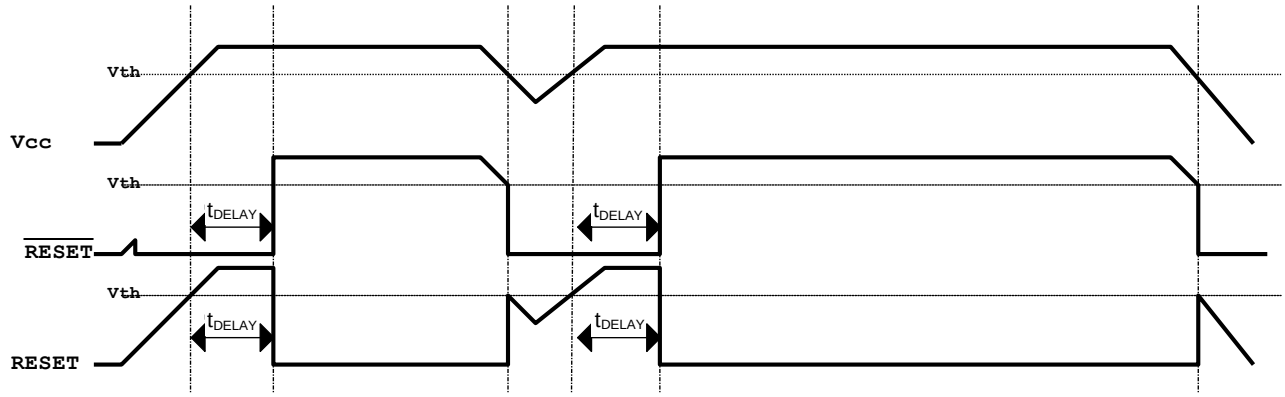


## Ordering Information

**APX8XXS X - X X - X**

| Output Type | Reset Active Timeout Period | Voltage | Package | Packing |
|---|---|---|---|---|
| 09 : Active Low<br>10 : Active High | Blank : 240ms<br>00 : 1.7ms<br>05 : 50ms | 23 : 2.25V<br>⋮<br>46 : 4.63V | SA/SR : SOT23 | 7 : Tape & Reel |

| Part Number | Package Code | Packaging | 7" Tape and Reel | |
|---|---|---|---|---|
| | | | Quantity | Part Number Suffix |
| APX809SXX-XXSA-7 | SA | SOT23 | 3,000/Tape & Reel | -7 |
| APX810SXX-XXSA-7 | SA | SOT23 | 3,000/Tape & Reel | -7 |
| APX809SXX-XXSR-7 | SR | SOT23 | 3,000/Tape & Reel | -7 |
| APX810SXX-XXSR-7 | SR | SOT23 | 3,000/Tape & Reel | -7 |


© Diodes Incorporated

## Marking Information

**1) SOT23**

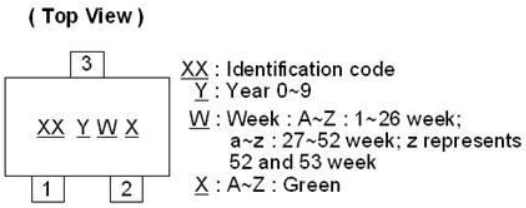


| Part Number | Package | Identification Code |
|---|---|---|
| APX809S00-46SA-7 | SOT23 | PB |
| APX809S05-46SA-7 | SOT23 | R5 |
| APX809S-46SA-7 | SOT23 | X2 |
| APX809S00-44SA-7 | SOT23 | PC |
| APX809S05-44SA-7 | SOT23 | R6 |
| APX809S-44SA-7 | SOT23 | X3 |
| APX809S00-40SA-7 | SOT23 | PD |
| APX809S05-40SA-7 | SOT23 | R7 |
| APX809S-40SA-7 | SOT23 | X4 |
| APX809S00-31SA-7 | SOT23 | PE |
| APX809S05-31SA-7 | SOT23 | R8 |
| APX809S-31SA-7 | SOT23 | X5 |
| APX809S00-29SA-7 | SOT23 | Q2 |
| APX809S05-29SA-7 | SOT23 | RM |
| APX809S-29SA-7 | SOT23 | X6 |
| APX809S00-26SA-7 | SOT23 | Q3 |
| APX809S05-26SA-7 | SOT23 | RN |
| APX809S-26SA-7 | SOT23 | X7 |
| APX809S00-23SA-7 | SOT23 | Q4 |
| APX809S05-23SA-7 | SOT23 | RP |
| APX809S-23SA-7 | SOT23 | X8 |
| APX810S00-46SA-7 | SOT23 | Q5 |
| APX810S05-46SA-7 | SOT23 | RR |
| APX810S-46SA-7 | SOT23 | XA |
| APX810S00-44SA-7 | SOT23 | Q6 |
| APX810S05-44SA-7 | SOT23 | RS |
| APX810S-44SA-7 | SOT23 | XB |
| APX810S00-40SA-7 | SOT23 | Q7 |
| APX810S05-40SA-7 | SOT23 | RT |
| APX810S-40SA-7 | SOT23 | XC |
| APX810S00-31SA-7 | SOT23 | Q8 |
| APX810S05-31SA-7 | SOT23 | RU |
| APX810S-31SA-7 | SOT23 | XD |
| APX810S00-29SA-7 | SOT23 | Q9 |
| APX810S05-29SA-7 | SOT23 | RV |
| APX810S-29SA-7 | SOT23 | XE |
| APX810S00-26SA-7 | SOT23 | QJ |
| APX810S05-26SA-7 | SOT23 | RW |
| APX810S-26SA-7 | SOT23 | XF |
| APX810S00-23SA-7 | SOT23 | QK |
| APX810S05-23SA-7 | SOT23 | RX |
| APX810S-23SA-7 | SOT23 | XG |


© Diodes Incorporated

## Marking Information (Cont.)

| Part Number | Package | Identification Code |
|---|---|---|
| APX809S00-46SR-7 | SOT23 | QM |
| APX809S05-46SR-7 | SOT23 | RY |
| APX809S-46SR-7 | SOT23 | Y2 |
| APX809S00-44SR-7 | SOT23 | QN |
| APX809S05-44SR-7 | SOT23 | RZ |
| APX809S-44SR-7 | SOT23 | Y3 |
| APX809S00-40SR-7 | SOT23 | QP |
| APX809S05-40SR-7 | SOT23 | SM |
| APX809S-40SR-7 | SOT23 | Y4 |
| APX809S00-31SR-7 | SOT23 | QQ |
| APX809S05-31SR-7 | SOT23 | SP |
| APX809S-31SR-7 | SOT23 | Y5 |
| APX809S00-29SR-7 | SOT23 | QR |
| APX809S05-29SR-7 | SOT23 | SR |
| APX809S-29SR-7 | SOT23 | Y6 |
| APX809S00-26SR-7 | SOT23 | QS |
| APX809S05-26SR-7 | SOT23 | SS |
| APX809S-26SR-7 | SOT23 | Y7 |
| APX809S00-23SR-7 | SOT23 | QT |
| APX809S05-23SR-7 | SOT23 | ST |
| APX809S-23SR-7 | SOT23 | Y8 |
| APX810S00-46SR-7 | SOT23 | QU |
| APX810S05-46SR-7 | SOT23 | SU |
| APX810S-46SR-7 | SOT23 | YA |
| APX810S00-44SR-7 | SOT23 | QV |
| APX810S05-44SR-7 | SOT23 | SV |
| APX810S-44SR-7 | SOT23 | YB |
| APX810S00-40SR-7 | SOT23 | QW |
| APX810S05-40SR-7 | SOT23 | SW |
| APX810S-40SR-7 | SOT23 | YC |
| APX810S00-31SR-7 | SOT23 | QX |
| APX810S05-31SR-7 | SOT23 | SX |
| APX810S-31SR-7 | SOT23 | YD |
| APX810S00-29SR-7 | SOT23 | QY |
| APX810S05-29SR-7 | SOT23 | SY |
| APX810S-29SR-7 | SOT23 | YE |
| APX810S00-26SR-7 | SOT23 | QZ |
| APX810S05-26SR-7 | SOT23 | SZ |
| APX810S-26SR-7 | SOT23 | YF |
| APX810S00-23SR-7 | SOT23 | R4 |
| APX810S05-23SR-7 | SOT23 | TY |
| APX810S-23SR-7 | SOT23 | YG |


© Diodes Incorporated

## Package Outline Dimensions

Please see http://www.diodes.com/package-outlines.html for the latest version.

**SOT23**

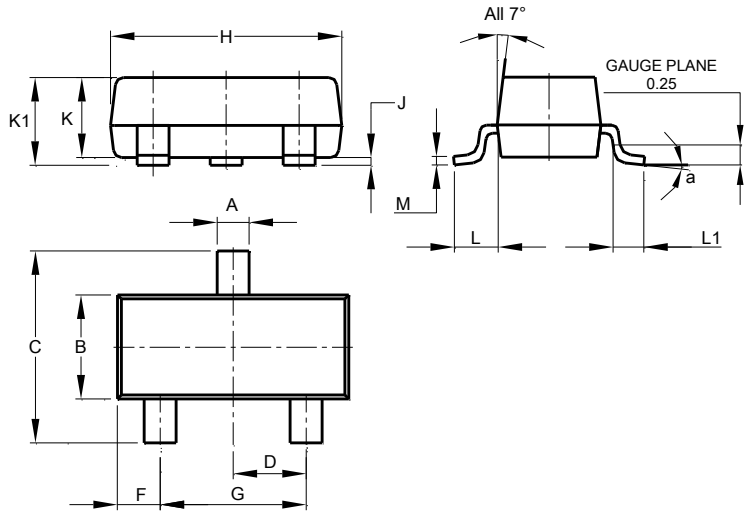


| SOT23 | | | |
|---|---|---|---|
| **Dim** | **Min** | **Max** | **Typ** |
| **A** | 0.37 | 0.51 | 0.40 |
| **B** | 1.20 | 1.40 | 1.30 |
| **C** | 2.30 | 2.50 | 2.40 |
| **D** | 0.89 | 1.03 | 0.915 |
| **F** | 0.45 | 0.60 | 0.535 |
| **G** | 1.78 | 2.05 | 1.83 |
| **H** | 2.80 | 3.00 | 2.90 |
| **J** | 0.013 | 0.10 | 0.05 |
| **K** | 0.890 | 1.00 | 0.975 |
| **K1** | 0.903 | 1.10 | 1.025 |
| **L** | 0.45 | 0.61 | 0.55 |
| **L1** | 0.25 | 0.55 | 0.40 |
| **M** | 0.085 | 0.150 | 0.110 |
| **a** | 0° | 8° | -- |
| **All Dimensions in mm** | | | |

## Suggested Pad Layout

Please see http://www.diodes.com/package-outlines.html for the latest version.

**SOT23**

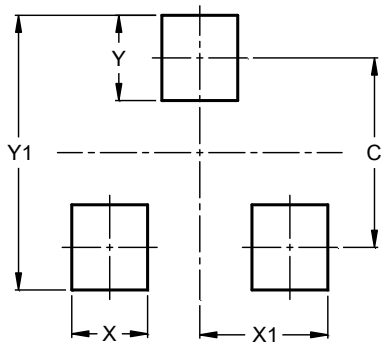


| Dimensions | Value (in mm) |
|---|---|
| **C** | 2.0 |
| **X** | 0.8 |
| **X1** | 1.35 |
| **Y** | 0.9 |
| **Y1** | 2.9 |


© Diodes Incorporated

**IMPORTANT NOTICE**

DIODES INCORPORATED MAKES NO WARRANTY OF ANY KIND, EXPRESS OR IMPLIED, WITH REGARDS TO THIS DOCUMENT, INCLUDING, BUT NOT LIMITED TO, THE IMPLIED WARRANTIES OF MERCHANTABILITY AND FITNESS FOR A PARTICULAR PURPOSE (AND THEIR EQUIVALENTS UNDER THE LAWS OF ANY JURISDICTION).

Diodes Incorporated and its subsidiaries reserve the right to make modifications, enhancements, improvements, corrections or other changes without further notice to this document and any product described herein. Diodes Incorporated does not assume any liability arising out of the application or use of this document or any product described herein; neither does Diodes Incorporated convey any license under its patent or trademark rights, nor the rights of others. Any Customer or user of this document or products described herein in such applications shall assume all risks of such use and will agree to hold Diodes Incorporated and all the companies whose products are represented on Diodes Incorporated website, harmless against all damages.

Diodes Incorporated does not warrant or accept any liability whatsoever in respect of any products purchased through unauthorized sales channel. Should Customers purchase or use Diodes Incorporated products for any unintended or unauthorized application, Customers shall indemnify and hold Diodes Incorporated and its representatives harmless against all claims, damages, expenses, and attorney fees arising out of, directly or indirectly, any claim of personal injury or death associated with such unintended or unauthorized application.

Products described herein may be covered by one or more United States, international or foreign patents pending. Product names and markings noted herein may also be covered by one or more United States, international or foreign trademarks.

This document is written in English but may be translated into multiple languages for reference. Only the English version of this document is the final and determinative format released by Diodes Incorporated.

**LIFE SUPPORT**

Diodes Incorporated products are specifically not authorized for use as critical components in life support devices or systems without the express written approval of the Chief Executive Officer of Diodes Incorporated. As used herein:

A. Life support devices or systems are devices or systems which:

1. are intended to implant into the body, or
2. support or sustain life and whose failure to perform when properly used in accordance with instructions for use provided in the labeling can be reasonably expected to result in significant injury to the user.

B. A critical component is any component in a life support device or system whose failure to perform can be reasonably expected to cause the failure of the life support device or to affect its safety or effectiveness.

Customers represent that they have all necessary expertise in the safety and regulatory ramifications of their life support devices or systems, and acknowledge and agree that they are solely responsible for all legal, regulatory and safety-related requirements concerning their products and any use of Diodes Incorporated products in such safety-critical, life support devices or systems, notwithstanding any devices- or systems-related information or support that may be provided by Diodes Incorporated. Further, Customers must fully indemnify Diodes Incorporated and its representatives against any damages arising out of the use of Diodes Incorporated products in such safety-critical, life support devices or systems.

Copyright © 2019, Diodes Incorporated

**www.diodes.com**