Description

The APX809S/810S are used for microprocessor (µP) supervisory circuits to monitor the power supplies in µP and digital systems. They provide excellent circuit reliability and low cost by eliminating external components and adjustments when used with +5V, +3.3V, +3.0V and +2.5V powered circuits.

These circuits perform a single function: they assert a reset signal whenever the V_{CC} supply voltage declines below a preset threshold, keeping it asserted for at least 240ms after V_{CC} has risen above the reset threshold. Reset thresholds suitable for operation with a variety of supply voltages are available. The APX809S/810S have push pull outputs. The APX809S has an active low $\overline{\text{RESET}}$ output, while the APX810S has an active high RESET output. The reset comparator is designed to ignore fast transients on V_{CC}, and the outputs are guaranteed to be in the correct logic state for V_{CC} down to 1V. Low supply current makes the APX809S/810S ideal for use in portable equipment. The APX809S/810S is available in a 3-pin SOT23 package.

Features

- Precision Monitoring of +2.5V, +3V, +3.3V and +5V Power-Supply Voltages
- Fully Specified Over-temperature
- Available in Three Output Configurations
- Push-Pull $\overline{\text{RESET}}$ Active Low (APX809S)
- Push-Pull RESET Active High (APX810S)
- 200ms Typ Power-On Reset Pulse Width
- 7µA Supply Current (Typ.)
- Guaranteed Reset Valid to V_{CC} = +1V
- No External Components
- SOT23 Available in "Green" Molding Compound (No Br, Sb)
- **Totally Lead-Free & Fully RoHS Compliant (Notes 1 & 2)**
- **Halogen and Antimony Free. "Green" Device (Note 3)**

Pin Assignments

(Top View)

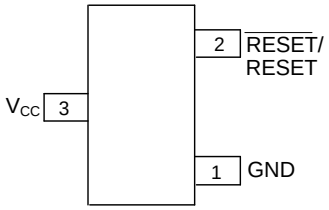

SOT23 (SA)

(Top View)

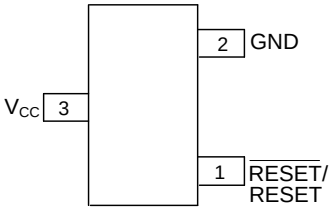

SOT23 (SR)

Applications

- Computers
- Controllers
- Intelligent Instruments
- Critical µP and µC Power Monitoring
- Portable/Battery Powered Equipment

Notes: 1. No purposely added lead. Fully EU Directive 2002/95/EC (RoHS), 2011/65/EU (RoHS 2) & 2015/863/EU (RoHS 3) compliant.
2. See https://www.diodes.com/quality/lead-free/ for more information about Diodes Incorporated's definitions of Halogen- and Antimony-free, "Green" and Lead-free.
3. Halogen- and Antimony-free "Green" products are defined as those which contain <900ppm bromine, <900ppm chlorine (<1500ppm total Br + Cl) and <1000ppm antimony compounds.

Typical Applications Circuit

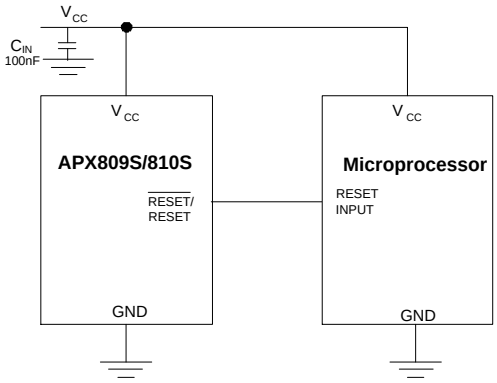

© Diodes Incorporated

Pin Descriptions

Pin Number		Pin Name	Function
SOT23 (SA)	SOT23 (SR)		
3	3	V_{CC}	Operating Voltage Input
2	1	$\overline{RESET}$/RESET	Reset Output Pin
1	2	GND	Ground

Functional Block Diagram

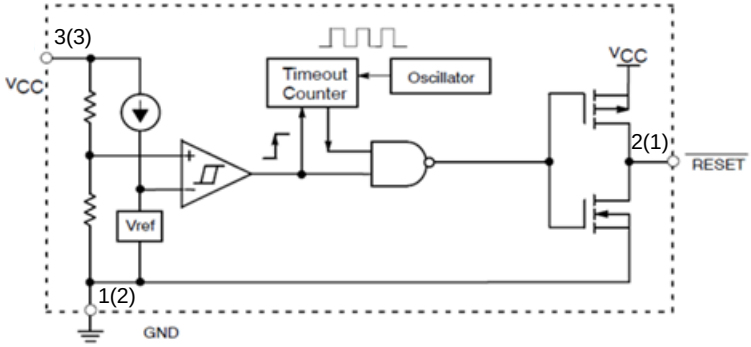

A(B)
A for SOT23 (SA)
B for SOT23 (SR)

APX809 S Series Complementary Active-Low Output

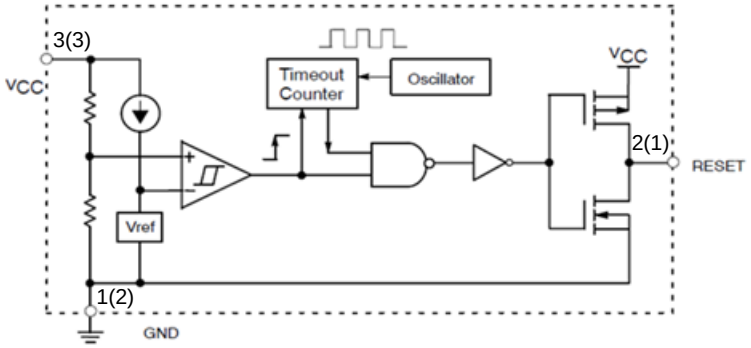

A(B)
A for SOT23 (SA)
B for SOT23 (SR)

APX810 S Series Complementary Active-High Output

© Diodes Incorporated

Absolute Maximum Ratings (@T_A = +25°C, unless otherwise specified.) (Note 4)

Symbol	Parameter		Rating	Unit
V_{CC}	Supply Voltage		-0.3 to 6.0	V
V_{RESET}	$\overline{RESET}$/RESET Voltage		-0.3 to 6.0	V
I_{CC}	Input Current		20	mA
I_O	Output Current		20	mA
θ_{JA}	Thermal Resistance Junction-to-Ambient	SOT23	232	°C/W
θ_{JC}	Thermal Resistance Junction-to-Case	SOT23	87	°C/W
ESD	HBM (Human Body Model)		6,000	V
	MM (Machine Model)		600	V
T_J	Junction Temperature Range		-40 to +150	°C
T_{STG}	Storage Temperature Range		-65 to +150	°C

Note: 4. Stresses greater than those listed under "Absolute Maximum Ratings" may cause permanent damage to the device. These are stress ratings only, and functional operation of the device at these or any other conditions beyond those indicated under "Recommended Operating Conditions" is not implied. Exposure to "Absolute Maximum Ratings" for extended periods may affect device reliability.

Recommended Operating Conditions (@T_A = +25°C, unless otherwise specified.)

Symbol	Parameter	Min	Max	Unit
T_A	Operating Ambient Temperature Range	-40	+125	°C
V_{CC}	Supply Voltage	1.0	5.5	V
V_{RESET}	$\overline{RESET}$ /RESET Output Voltage	0	5.5	V

© Diodes Incorporated

Electrical Characteristics (@T_A = +25°C, unless otherwise specified.)

Symbol	Parameter		Test Conditions	Min	Typ	Max	Unit
I_{CC}	Supply Current		V_{TH} + 0.2V	—	7	16	µA
V_{TH}	APX809SXX/810SXX-23		T_A = +25°C	2.22	2.25	2.29	V
	APX809SXX/810SXX-26			2.59	2.63	2.67	
	APX809SXX/810SXX-29			2.89	2.93	2.97	
	APX809SXX/810SXX-31			3.04	3.08	3.12	
	APX809SXX/810SXX-40			3.94	4.00	4.05	
	APX809SXX/810SXX-44			4.32	4.38	4.44	
	APX809SXX/810SXX-46			4.57	4.63	4.69	
$\frac{\Delta V_{TH}}{V_{TH} \times \Delta T}$	Reset Threshold Voltage Temperature Coefficient		T_A = -40 to +125°C	—	30	—	ppm/°C
t_S	V_{CC} Drop to $\overline{RESET}$ Delay		$V_{CC} = V_{TH}$ to (V_{TH} - 100mV)	—	20	—	µs
t_{DELAY}	Reset Active Timeout Period	APX809S00/810S00-XX	$V_{CC} \geq 1.02 \times V_{TH}$	1	1.7	3.3	ms
		APX809S05/810S05-XX		20	50	70	
		APX809S/810S-XX		140	240	280	
V_{OL}	$\overline{RESET}$ Output Voltage Low (APX809S)		$V_{CC} = V_{TH}$ - 0.2V, I_{SINK} = 1.2mA	—	—	0.3	V
			$V_{CC} = V_{TH}$ - 0.2V, I_{SINK} = 3.2mA	—	—	0.4	
			V_{CC} > 1.0V, I_{SINK} = 50µA	—	—	0.3	
V_{OH}	$\overline{RESET}$ Output Voltage-High (APX809S)		$V_{CC} > V_{TH}$ + 0.2V, I_{SOURCE} = 500µA	$0.8V_{CC}$	—	—	V
			$V_{CC} > V_{TH}$ + 0.2V, I_{SOURCE} = 800µA	V_{CC} - 1.5	—	—	
V_{OL}	RESET Output Voltage-Low (APX810S)		$V_{CC} = V_{TH}$ + 0.2V, I_{SINK} = 1.2mA	—	—	0.3	V
			$V_{CC} = V_{TH}$ + 0.2V, I_{SINK} = 3.2mA	—	—	0.4	
V_{OH}	RESET Output Voltage-High (APX810S)		1.8V < V_{CC} < V_{TH} - 0.2, I_{SOURCE} = 150µA	$0.8V_{CC}$	—	—	V

© Diodes Incorporated

Performance Characteristics

RESET Threshold Voltage vs. Temperature

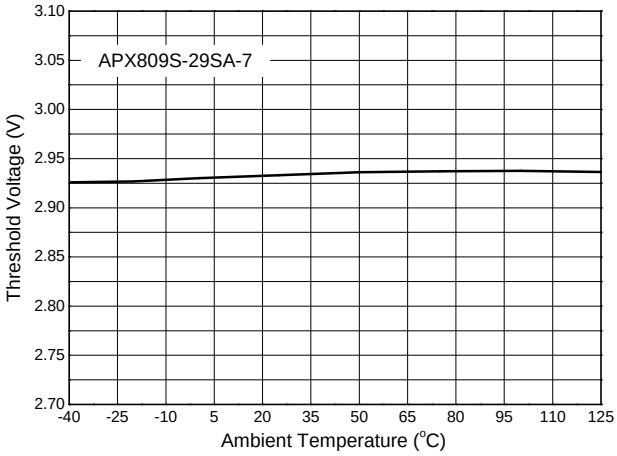

RESET Active Timeout Period vs. Temperature

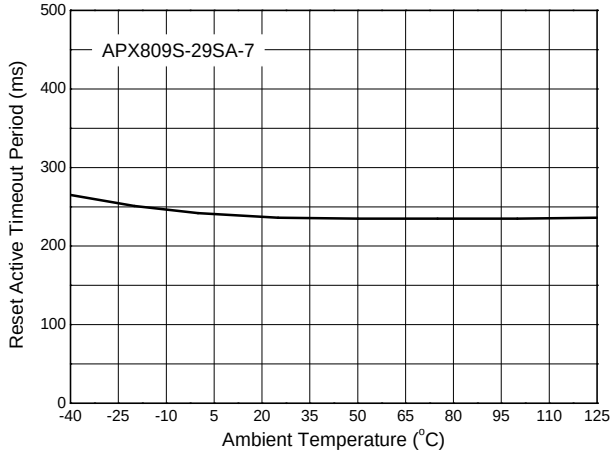

Supply Current vs. Temperature

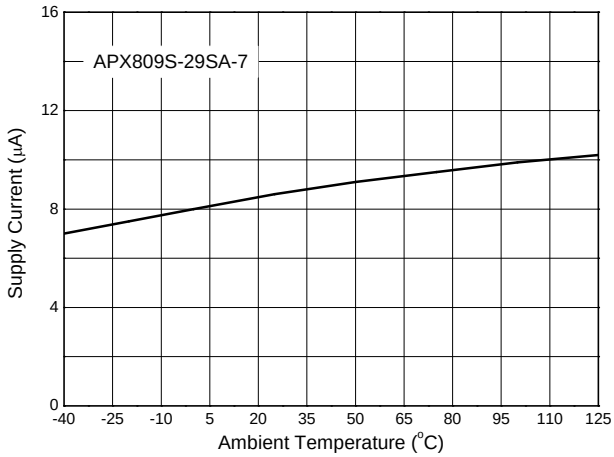

Output Voltage vs. Input Voltage

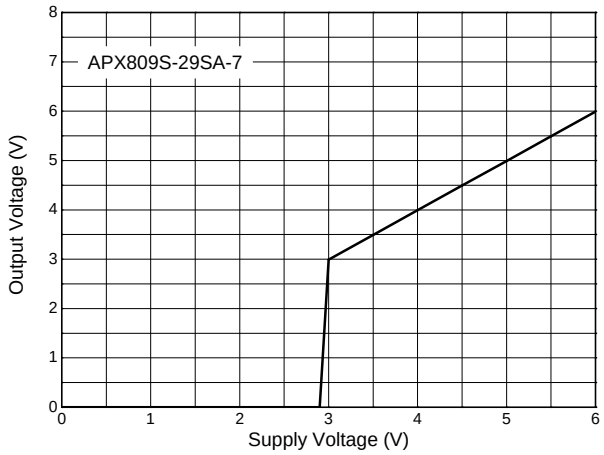

Output Sink Current vs. Input Voltage

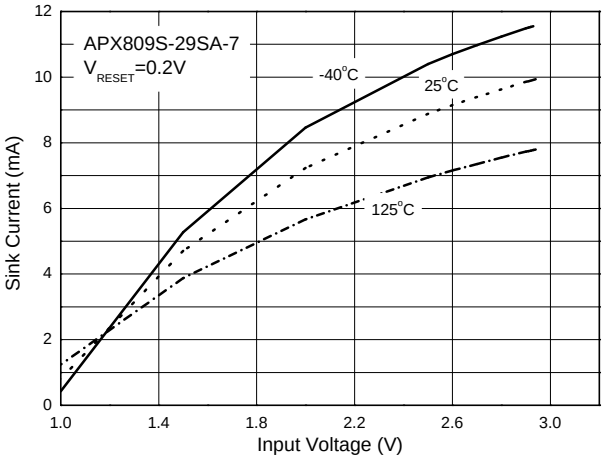

Output Sink Current vs. Input Voltage

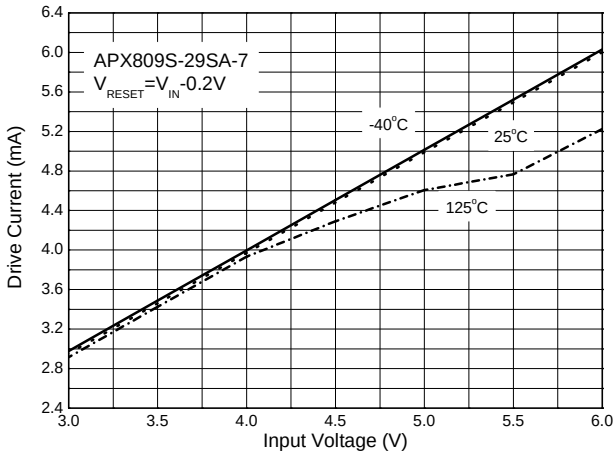

© Diodes Incorporated

Timing Diagram

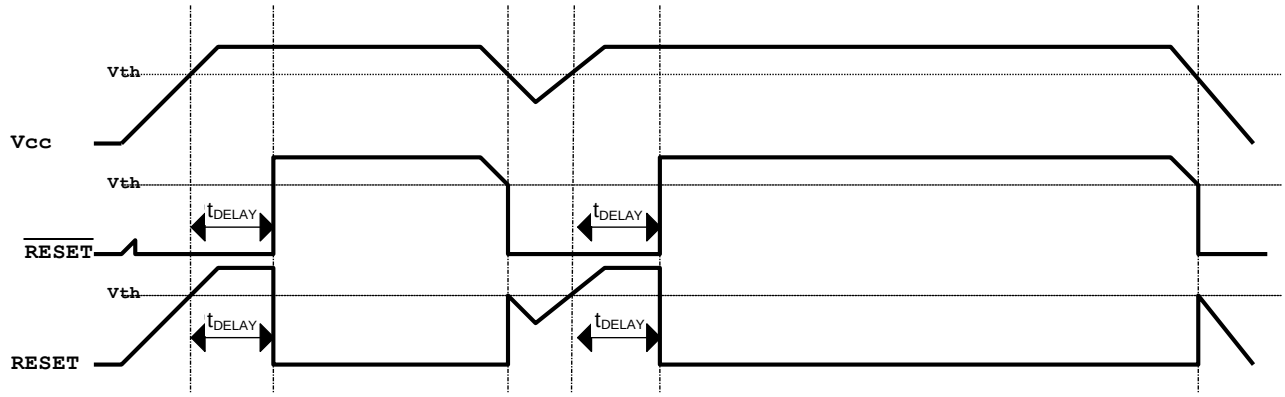

Ordering Information

APX8XXS X - X X - X

Output Type	Reset Active Timeout Period	Voltage	Package	Packing
09 : Active Low 10 : Active High	Blank : 240ms 00 : 1.7ms 05 : 50ms	23 : 2.25V ⋮ 46 : 4.63V	SA/SR : SOT23	7 : Tape & Reel

Part Number	Package Code	Packaging	7" Tape and Reel	
			Quantity	Part Number Suffix
APX809SXX-XXSA-7	SA	SOT23	3,000/Tape & Reel	-7
APX810SXX-XXSA-7	SA	SOT23	3,000/Tape & Reel	-7
APX809SXX-XXSR-7	SR	SOT23	3,000/Tape & Reel	-7
APX810SXX-XXSR-7	SR	SOT23	3,000/Tape & Reel	-7

© Diodes Incorporated

Marking Information

1) SOT23

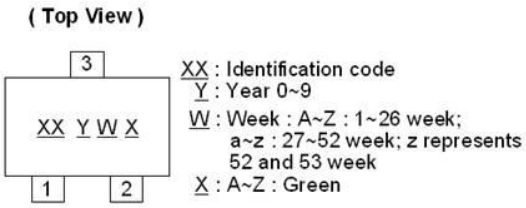

Part Number	Package	Identification Code
APX809S00-46SA-7	SOT23	PB
APX809S05-46SA-7	SOT23	R5
APX809S-46SA-7	SOT23	X2
APX809S00-44SA-7	SOT23	PC
APX809S05-44SA-7	SOT23	R6
APX809S-44SA-7	SOT23	X3
APX809S00-40SA-7	SOT23	PD
APX809S05-40SA-7	SOT23	R7
APX809S-40SA-7	SOT23	X4
APX809S00-31SA-7	SOT23	PE
APX809S05-31SA-7	SOT23	R8
APX809S-31SA-7	SOT23	X5
APX809S00-29SA-7	SOT23	Q2
APX809S05-29SA-7	SOT23	RM
APX809S-29SA-7	SOT23	X6
APX809S00-26SA-7	SOT23	Q3
APX809S05-26SA-7	SOT23	RN
APX809S-26SA-7	SOT23	X7
APX809S00-23SA-7	SOT23	Q4
APX809S05-23SA-7	SOT23	RP
APX809S-23SA-7	SOT23	X8
APX810S00-46SA-7	SOT23	Q5
APX810S05-46SA-7	SOT23	RR
APX810S-46SA-7	SOT23	XA
APX810S00-44SA-7	SOT23	Q6
APX810S05-44SA-7	SOT23	RS
APX810S-44SA-7	SOT23	XB
APX810S00-40SA-7	SOT23	Q7
APX810S05-40SA-7	SOT23	RT
APX810S-40SA-7	SOT23	XC
APX810S00-31SA-7	SOT23	Q8
APX810S05-31SA-7	SOT23	RU
APX810S-31SA-7	SOT23	XD
APX810S00-29SA-7	SOT23	Q9
APX810S05-29SA-7	SOT23	RV
APX810S-29SA-7	SOT23	XE
APX810S00-26SA-7	SOT23	QJ
APX810S05-26SA-7	SOT23	RW
APX810S-26SA-7	SOT23	XF
APX810S00-23SA-7	SOT23	QK
APX810S05-23SA-7	SOT23	RX
APX810S-23SA-7	SOT23	XG

© Diodes Incorporated

Marking Information (Cont.)

Part Number	Package	Identification Code
APX809S00-46SR-7	SOT23	QM
APX809S05-46SR-7	SOT23	RY
APX809S-46SR-7	SOT23	Y2
APX809S00-44SR-7	SOT23	QN
APX809S05-44SR-7	SOT23	RZ
APX809S-44SR-7	SOT23	Y3
APX809S00-40SR-7	SOT23	QP
APX809S05-40SR-7	SOT23	SM
APX809S-40SR-7	SOT23	Y4
APX809S00-31SR-7	SOT23	QQ
APX809S05-31SR-7	SOT23	SP
APX809S-31SR-7	SOT23	Y5
APX809S00-29SR-7	SOT23	QR
APX809S05-29SR-7	SOT23	SR
APX809S-29SR-7	SOT23	Y6
APX809S00-26SR-7	SOT23	QS
APX809S05-26SR-7	SOT23	SS
APX809S-26SR-7	SOT23	Y7
APX809S00-23SR-7	SOT23	QT
APX809S05-23SR-7	SOT23	ST
APX809S-23SR-7	SOT23	Y8
APX810S00-46SR-7	SOT23	QU
APX810S05-46SR-7	SOT23	SU
APX810S-46SR-7	SOT23	YA
APX810S00-44SR-7	SOT23	QV
APX810S05-44SR-7	SOT23	SV
APX810S-44SR-7	SOT23	YB
APX810S00-40SR-7	SOT23	QW
APX810S05-40SR-7	SOT23	SW
APX810S-40SR-7	SOT23	YC
APX810S00-31SR-7	SOT23	QX
APX810S05-31SR-7	SOT23	SX
APX810S-31SR-7	SOT23	YD
APX810S00-29SR-7	SOT23	QY
APX810S05-29SR-7	SOT23	SY
APX810S-29SR-7	SOT23	YE
APX810S00-26SR-7	SOT23	QZ
APX810S05-26SR-7	SOT23	SZ
APX810S-26SR-7	SOT23	YF
APX810S00-23SR-7	SOT23	R4
APX810S05-23SR-7	SOT23	TY
APX810S-23SR-7	SOT23	YG

© Diodes Incorporated

Package Outline Dimensions

Please see http://www.diodes.com/package-outlines.html for the latest version.

SOT23

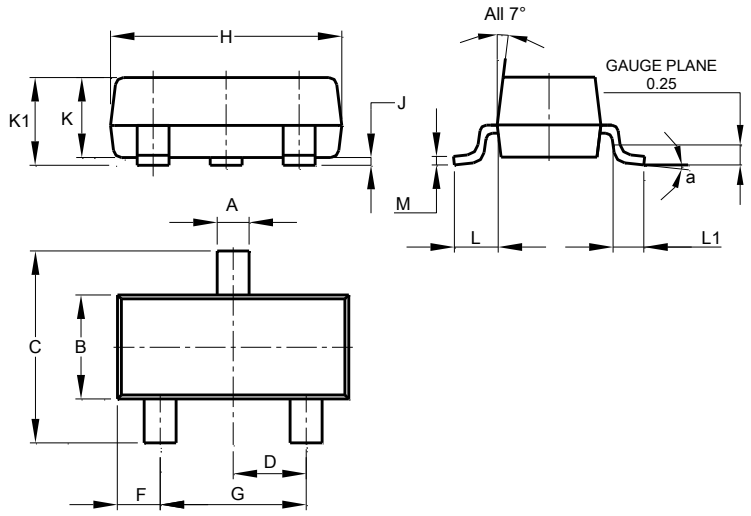

SOT23			
Dim	**Min**	**Max**	**Typ**
A	0.37	0.51	0.40
B	1.20	1.40	1.30
C	2.30	2.50	2.40
D	0.89	1.03	0.915
F	0.45	0.60	0.535
G	1.78	2.05	1.83
H	2.80	3.00	2.90
J	0.013	0.10	0.05
K	0.890	1.00	0.975
K1	0.903	1.10	1.025
L	0.45	0.61	0.55
L1	0.25	0.55	0.40
M	0.085	0.150	0.110
a	0°	8°	--
All Dimensions in mm			

Suggested Pad Layout

Please see http://www.diodes.com/package-outlines.html for the latest version.

SOT23

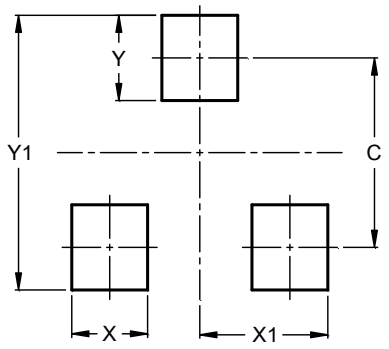

Dimensions	Value (in mm)
C	2.0
X	0.8
X1	1.35
Y	0.9
Y1	2.9

© Diodes Incorporated

IMPORTANT NOTICE

DIODES INCORPORATED MAKES NO WARRANTY OF ANY KIND, EXPRESS OR IMPLIED, WITH REGARDS TO THIS DOCUMENT, INCLUDING, BUT NOT LIMITED TO, THE IMPLIED WARRANTIES OF MERCHANTABILITY AND FITNESS FOR A PARTICULAR PURPOSE (AND THEIR EQUIVALENTS UNDER THE LAWS OF ANY JURISDICTION).

Diodes Incorporated and its subsidiaries reserve the right to make modifications, enhancements, improvements, corrections or other changes without further notice to this document and any product described herein. Diodes Incorporated does not assume any liability arising out of the application or use of this document or any product described herein; neither does Diodes Incorporated convey any license under its patent or trademark rights, nor the rights of others. Any Customer or user of this document or products described herein in such applications shall assume all risks of such use and will agree to hold Diodes Incorporated and all the companies whose products are represented on Diodes Incorporated website, harmless against all damages.

Diodes Incorporated does not warrant or accept any liability whatsoever in respect of any products purchased through unauthorized sales channel. Should Customers purchase or use Diodes Incorporated products for any unintended or unauthorized application, Customers shall indemnify and hold Diodes Incorporated and its representatives harmless against all claims, damages, expenses, and attorney fees arising out of, directly or indirectly, any claim of personal injury or death associated with such unintended or unauthorized application.

Products described herein may be covered by one or more United States, international or foreign patents pending. Product names and markings noted herein may also be covered by one or more United States, international or foreign trademarks.

This document is written in English but may be translated into multiple languages for reference. Only the English version of this document is the final and determinative format released by Diodes Incorporated.

LIFE SUPPORT

Diodes Incorporated products are specifically not authorized for use as critical components in life support devices or systems without the express written approval of the Chief Executive Officer of Diodes Incorporated. As used herein:

A. Life support devices or systems are devices or systems which:

1. are intended to implant into the body, or
2. support or sustain life and whose failure to perform when properly used in accordance with instructions for use provided in the labeling can be reasonably expected to result in significant injury to the user.

B. A critical component is any component in a life support device or system whose failure to perform can be reasonably expected to cause the failure of the life support device or to affect its safety or effectiveness.

Customers represent that they have all necessary expertise in the safety and regulatory ramifications of their life support devices or systems, and acknowledge and agree that they are solely responsible for all legal, regulatory and safety-related requirements concerning their products and any use of Diodes Incorporated products in such safety-critical, life support devices or systems, notwithstanding any devices- or systems-related information or support that may be provided by Diodes Incorporated. Further, Customers must fully indemnify Diodes Incorporated and its representatives against any damages arising out of the use of Diodes Incorporated products in such safety-critical, life support devices or systems.

Copyright © 2019, Diodes Incorporated

www.diodes.com