LPR Low Profile Resistor - Aluminium Housed Resistor

LPR series are low profile resistors encapuslate in an ultra slim aluminium housed casing. Designed for applications where space is critical i.e EV vehicles, instruments, drivers and frequency converters.

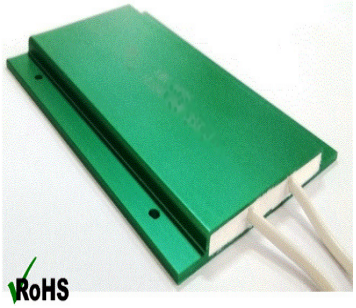

- Low profile
- 50 Watt & 100 Watt Versions
- Easy mounting
- UL approved cables
- RoHS Compliant

Characteristics

Tolerance (Code):	J (±5%)
Maximum operating temperature:	250°C
Insulation resistance:	>100Mohm
Short Term Overload	5 times Rated Power for 5 Seconds
Dieletric Strength	2500VAC rms For 1 Minute

Electrical Specifications

Type	Wattage	Ohmic Values
LPR50	50	3R3 - 1K
LPR100	100	3R3 - 1K

Ordering Procedure

Standard Resistor: Series, Resistance Value, Tolerance,

e.g. LRP50 3R3 J

Dimensions (mm)

Series	A max	B Max	C ±0.2	D±0.2	E±5.0
LPR50	50	75	30	62	200
LPR100	100	75	67	62	200

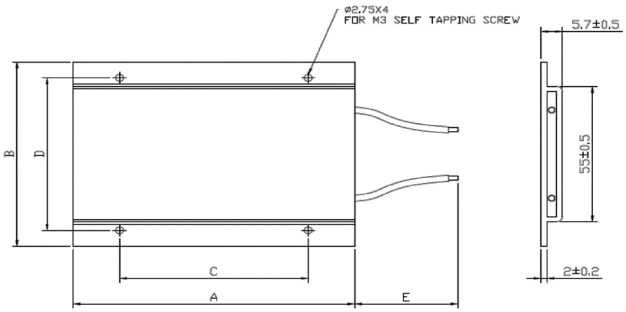

ARCOL UK Limited,
Threemilestone Ind. Estate,
Truro, Cornwall, TR4 9LG, UK.
T +44 (0) 1872 277431
F +44 (0) 1872 222002
E sales@arcolresistors.com

www.arcolresistors.com

The information contained herein does not form part of a contract and is subject to change without notice. ARCOL operate a policy of continual product development, therefore, specifications may change.

It is the responsibility of the customer to ensure that the component selected from our range is suitable for the intended application. If in doubt please ask ARCOL.