Kinetis K02 64 KB/128 KB Flash

100 MHz ARM® Cortex®-M4 Based Microcontroller with FPU

MK02FN128VLH10
MK02FN128VLF10
MK02FN128VFM10
MK02FN64VLH10
MK02FN64VLF10
MK02FN64VFM10

Ideal for low-power applications that require processing efficiency and high peripheral integration. These devices share the comprehensive enablement and scalability of the Kinetis family.
This product offers:

- Run power consumption down to 117.5 µA/MHz and static power consumption down to 2.8 µA with full state retention and 5.7 µs wakeup. Lowest static mode down to 70 nA.
- Excellent processing efficiency, 100 MHz ARM® Cortex®-M4-based device with floating-point unit in a tiny form factor

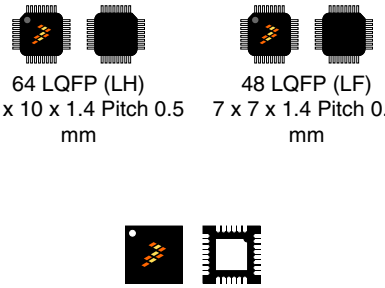

Performance
- 100 MHz ARM Cortex-M4 core with DSP instructions delivering 1.25 Dhrystone MIPS per MHz

Memories and memory interfaces
- Up to 128 KB of embedded flash and 16 KB of RAM
- Preprogrammed Kinetis flashloader for one-time, in-system factory programming

System peripherals
- Flexible low-power modes, multiple wake up sources
- 4-channel DMA controller
- Independent External and Software Watchdog monitor

Clocks
- Crystal oscillator: 32-40 kHz or 3-32 MHz
- Three internal oscillators: 32 kHz, 4 MHz, and 48 MHz
- Multi-purpose clock generator with FLL

Security and integrity modules
- Hardware CRC module
- 128-bit unique identification (ID) number per chip
- Flash access control to protect proprietary software

Human-machine interface
- Up to 46 general-purpose I/O (GPIO)

Analog modules
- One 16-bit SAR ADC (1.2 MS/s in 12bit mode)
- One 12-bit DAC
- Two analog comparators (CMP) with 6- bit DAC
- Accurate internal voltage reference (not available in 32-pin QFN package)

Communication interfaces
- One SPI module
- Two UART modules
- One I2C: Support for up to 1 Mbps operation

Timers
- One 6-channel general-purpose/PWM timer
- Two 2-channel general-purpose timers with quadrature decoder functionality (FTM2 does not have external pins on the 32-pin QFN or the 48-pin LQFP package)
- Periodic interrupt timers
- 16-bit low-power timer
- Programmable delay block

Operating Characteristics
- Voltage range (including flash writes): 1.71 to 3.6 V
- Temperature range (ambient): -40 to 105°C

NXP reserves the right to change the production detail specifications as may be required to permit improvements in the design of its products.

Ordering Information

Part Number	Memory		Number of GPIOs
	Flash (KB)	SRAM (KB)	
MK02FN128VLH10	128	16	46
MK02FN128VLF10	128	16	35
MK02FN128VFM10	128	16	26
MK02FN64VLH10	64	16	46
MK02FN64VLF10	64	16	35
MK02FN64VFM10	64	16	26

Device Revision Number

Device Mask Set Number	SIM_SDID[REVID]	JTAG ID Register[PRN]
0N36M	0000	0000

Related Resources

Type	Description	Resource
Selector Guide	The NXP Solution Advisor is a web-based tool that features interactive application wizards and a dynamic product selector.	KINETISKMCUSELGD
Reference Manual	The Reference Manual contains a comprehensive description of the structure and function (operation) of a device.	K02P64M100SFARM
Data Sheet	The Data Sheet includes electrical characteristics and signal connections.	This document.
Chip Errata	The chip mask set Errata provides additional or corrective information for a particular device mask set.	Kinetis_K_0N36M
Package drawing	Package dimensions are provided by the part number: • MK02FN64VFM10 • MK02FN128VFM10 • MK02FN64VLF10 • MK02FN128VLF10 • MK02FN64VLH10 • MK02FN128VLH10	• 98ARE10566D • 98ARE10566D • 98ASH00962A • 98ASH00962A • 98ASS23234W • 98ASS23234W

Figure 1 shows the functional modules in the chip.

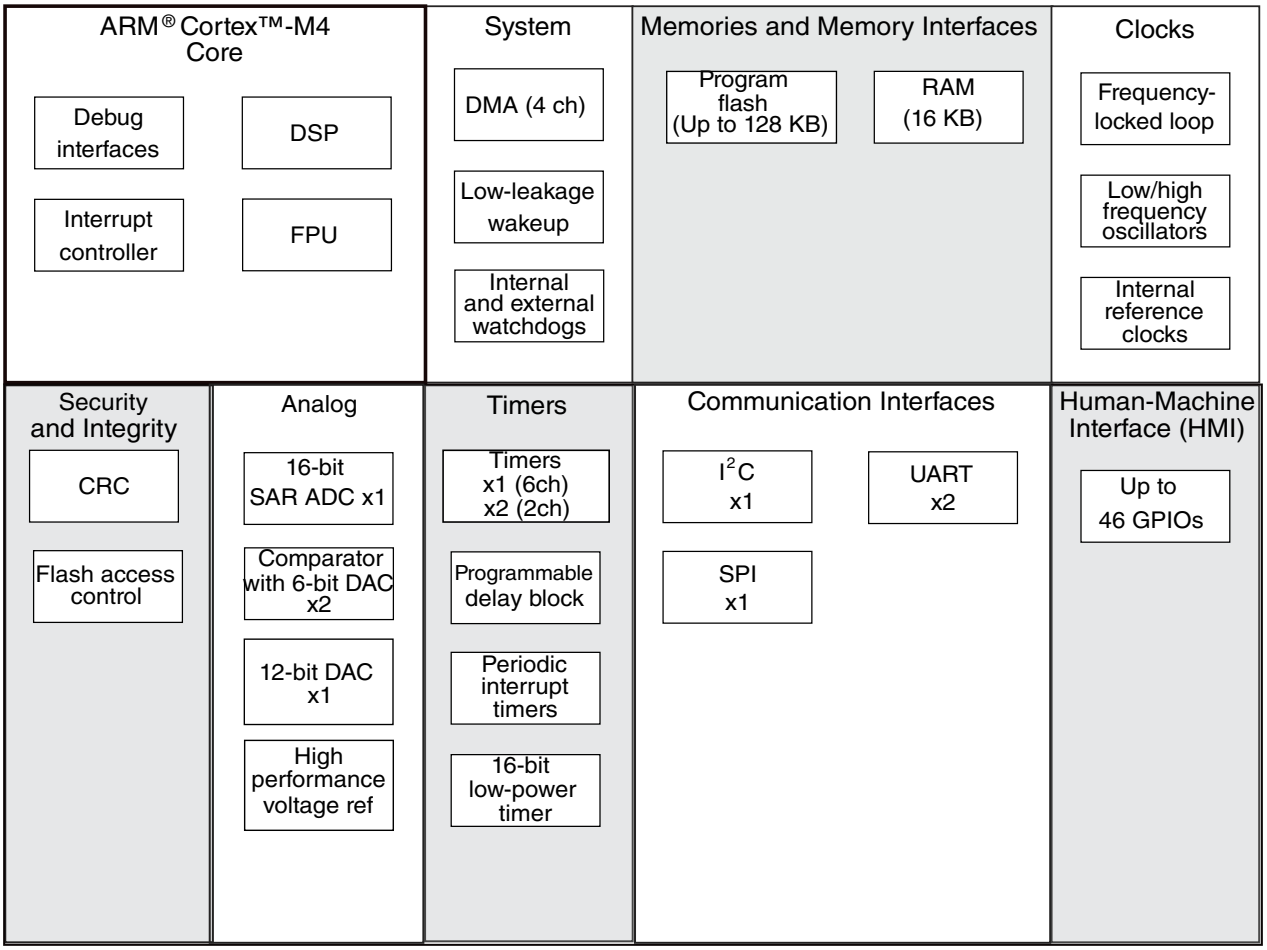

Figure 1. Functional block diagram

Table of Contents

1 Ratings....5
1.1 Thermal handling ratings....5
1.2 Moisture handling ratings....5
1.3 ESD handling ratings....5
1.4 Voltage and current operating ratings....5
2 General....6
2.1 AC electrical characteristics....6
2.2 Nonswitching electrical specifications....6
2.2.1 Voltage and current operating requirements....6
2.2.2 LVD and POR operating requirements....7
2.2.3 Voltage and current operating behaviors....8
2.2.4 Power mode transition operating behaviors....9
2.2.5 Power consumption operating behaviors....10
2.2.6 EMC radiated emissions operating behaviors....16
2.2.7 Designing with radiated emissions in mind....17
2.2.8 Capacitance attributes....17
2.3 Switching specifications....17
2.3.1 Device clock specifications....17
2.3.2 General switching specifications....18
2.4 Thermal specifications....18
2.4.1 Thermal operating requirements....18
2.4.2 Thermal attributes....19
3 Peripheral operating requirements and behaviors....20
3.1 Core modules....20
3.1.1 SWD electricals....20
3.1.2 JTAG electricals....21
3.2 System modules....24
3.3 Clock modules....24
3.3.1 MCG specifications....24
3.3.2 IRC48M specifications....26
3.3.3 Oscillator electrical specifications....26
3.4 Memories and memory interfaces....29
3.4.1 Flash electrical specifications....29
3.5 Security and integrity modules....30
3.6 Analog....30
3.6.1 ADC electrical specifications....30
3.6.2 CMP and 6-bit DAC electrical specifications....34
3.6.3 12-bit DAC electrical characteristics....37
3.6.4 Voltage reference electrical specifications....40
3.7 Timers....41
3.8 Communication interfaces....41
3.8.1 DSPI switching specifications (limited voltage range)....42
3.8.2 DSPI switching specifications (full voltage range)....43
3.8.3 Inter-Integrated Circuit Interface (I2C) timing....45
3.8.4 UART switching specifications....47
4 Dimensions....47
4.1 Obtaining package dimensions....47
5 Pinout....47
5.1 K02F Signal Multiplexing and Pin Assignments....47
5.2 Recommended connection for unused analog and digital pins....50
5.3 K02F Pinouts....51
6 Part identification....54
6.1 Description....54
6.2 Format....54
6.3 Fields....55
6.4 Example....55
6.5 48-pin LQFP part marking....56
6.6 32-pin QFN part marking....56
7 Terminology and guidelines....56
7.1 Definitions....56
7.2 Examples....57
7.3 Typical-value conditions....57
7.4 Relationship between ratings and operating requirements....58
7.5 Guidelines for ratings and operating requirements....58
8 Revision History....58

1 Ratings

1.1 Thermal handling ratings

Symbol	Description	Min.	Max.	Unit	Notes
T_{STG}	Storage temperature	–55	150	°C	1
T_{SDR}	Solder temperature, lead-free	—	260	°C	2

1. Determined according to JEDEC Standard JESD22-A103, *High Temperature Storage Life*.
2. Determined according to IPC/JEDEC Standard J-STD-020, *Moisture/Reflow Sensitivity Classification for Nonhermetic Solid State Surface Mount Devices*.

1.2 Moisture handling ratings

Symbol	Description	Min.	Max.	Unit	Notes
MSL	Moisture sensitivity level	—	3	—	1

1. Determined according to IPC/JEDEC Standard J-STD-020, *Moisture/Reflow Sensitivity Classification for Nonhermetic Solid State Surface Mount Devices*.

1.3 ESD handling ratings

Symbol	Description	Min.	Max.	Unit	Notes
V_{HBM}	Electrostatic discharge voltage, human body model	-2000	+2000	V	1
V_{CDM}	Electrostatic discharge voltage, charged-device model	-500	+500	V	2
I_{LAT}	Latch-up current at ambient temperature of 105°C	-100	+100	mA	3

1. Determined according to JEDEC Standard JESD22-A114, *Electrostatic Discharge (ESD) Sensitivity Testing Human Body Model (HBM)*.
2. Determined according to JEDEC Standard JESD22-C101, *Field-Induced Charged-Device Model Test Method for Electrostatic-Discharge-Withstand Thresholds of Microelectronic Components*.
3. Determined according to JEDEC Standard JESD78, *IC Latch-Up Test*.

1.4 Voltage and current operating ratings

Symbol	Description	Min.	Max.	Unit
V_{DD}	Digital supply voltage	–0.3	3.8	V
I_{DD}	Digital supply current	—	145	mA
V_{DIO}	Digital input voltage	–0.3	V_{DD} + 0.3	V
V_{AIO}	Analog[1]	–0.3	V_{DD} + 0.3	V
I_D	Maximum current single pin limit (applies to all digital pins)	–25	25	mA
V_{DDA}	Analog supply voltage	V_{DD} – 0.3	V_{DD} + 0.3	V

1. Analog pins are defined as pins that do not have an associated general purpose I/O port function.

2 General

2.1 AC electrical characteristics

Unless otherwise specified, propagation delays are measured from the 50% to the 50% point, and rise and fall times are measured at the 20% and 80% points, as shown in the following figure.

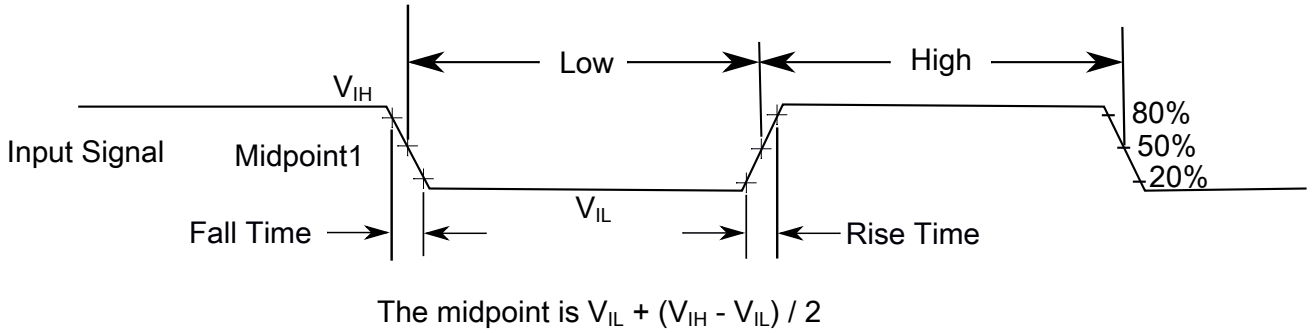

Figure 2. Input signal measurement reference

2.2 Nonswitching electrical specifications

2.2.1 Voltage and current operating requirements

Table 1. Voltage and current operating requirements

Symbol	Description	Min.	Max.	Unit	Notes
V_{DD}	Supply voltage	1.71	3.6	V	

Table continues on the next page...

Table 1. Voltage and current operating requirements (continued)

Symbol	Description	Min.	Max.	Unit	Notes
V_{DDA}	Analog supply voltage	1.71	3.6	V	
$V_{DD} – V_{DDA}$	V_{DD}-to-V_{DDA} differential voltage	–0.1	0.1	V	
$V_{SS} – V_{SSA}$	V_{SS}-to-V_{SSA} differential voltage	–0.1	0.1	V	
V_{IH}	Input high voltage • 2.7 V ≤ V_{DD} ≤ 3.6 V • 1.7 V ≤ V_{DD} ≤ 2.7 V	0.7 × V_{DD} 0.75 × V_{DD}	— —	V V	
V_{IL}	Input low voltage • 2.7 V ≤ V_{DD} ≤ 3.6 V • 1.7 V ≤ V_{DD} ≤ 2.7 V	— —	0.35 × V_{DD} 0.3 × V_{DD}	V V	
V_{HYS}	Input hysteresis	0.06 × V_{DD}	—	V	
I_{ICIO}	Analog and I/O pin DC injection current — single pin • V_{IN} < V_{SS}-0.3V (Negative current injection)	-3	—	mA	1
I_{ICcont}	Contiguous pin DC injection current —regional limit, includes sum of negative injection currents or sum of positive injection currents of 16 contiguous pins • Negative current injection	-25	—	mA	
V_{ODPU}	Open drain pullup voltage level	V_{DD}	V_{DD}	V	2
V_{RAM}	V_{DD} voltage required to retain RAM	1.2	—	V	

1. All analog and I/O pins are internally clamped to V_{SS} through ESD protection diodes. If V_{IN} is less than V_{IO_MIN} or greater than V_{IO_MAX}, a current limiting resistor is required. The negative DC injection current limiting resistor is calculated as $R=(V_{IO_MIN}-V_{IN})/|I_{ICIO}|$.
2. Open drain outputs must be pulled to VDD.

2.2.2 LVD and POR operating requirements

Table 2. V_{DD} supply LVD and POR operating requirements

Symbol	Description	Min.	Typ.	Max.	Unit	Notes
V_{POR}	Falling VDD POR detect voltage	0.8	1.1	1.5	V	
V_{LVDH}	Falling low-voltage detect threshold — high range (LVDV=01)	2.48	2.56	2.64	V	
	Low-voltage warning thresholds — high range					1
V_{LVW1H}	• Level 1 falling (LVWV=00)	2.62	2.70	2.78	V	
V_{LVW2H}	• Level 2 falling (LVWV=01)	2.72	2.80	2.88	V	
V_{LVW3H}	• Level 3 falling (LVWV=10)	2.82	2.90	2.98	V	
V_{LVW4H}	• Level 4 falling (LVWV=11)	2.92	3.00	3.08	V	

Table continues on the next page...

Table 2. V_{DD} supply LVD and POR operating requirements (continued)

Symbol	Description	Min.	Typ.	Max.	Unit	Notes
V_{HYSH}	Low-voltage inhibit reset/recover hysteresis — high range	—	80	—	mV	
V_{LVDL}	Falling low-voltage detect threshold — low range (LVDV=00)	1.54	1.60	1.66	V	
	Low-voltage warning thresholds — low range					1
V_{LVW1L}	• Level 1 falling (LVWV=00)	1.74	1.80	1.86	V	
V_{LVW2L}	• Level 2 falling (LVWV=01)	1.84	1.90	1.96	V	
V_{LVW3L}	• Level 3 falling (LVWV=10)	1.94	2.00	2.06	V	
V_{LVW4L}	• Level 4 falling (LVWV=11)	2.04	2.10	2.16	V	
V_{HYSL}	Low-voltage inhibit reset/recover hysteresis — low range	—	60	—	mV	
V_{BG}	Bandgap voltage reference	0.97	1.00	1.03	V	
t_{LPO}	Internal low power oscillator period — factory trimmed	900	1000	1100	μs	

1. Rising threshold is the sum of falling threshold and hysteresis voltage

2.2.3 Voltage and current operating behaviors

Table 3. Voltage and current operating behaviors

Symbol	Description	Min.	Typ.	Max.	Unit	Notes
V_{OH}	Output high voltage — Normal drive pad except RESET_B					
	$2.7\ V \le V_{DD} \le 3.6\ V$, $I_{OH} = -5\ mA$	$V_{DD} - 0.5$	—	—	V	1
	$1.71\ V \le V_{DD} \le 2.7\ V$, $I_{OH} = -2.5\ mA$	$V_{DD} - 0.5$	—	—	V	
V_{OH}	Output high voltage — High drive pad except RESET_B					
	$2.7\ V \le V_{DD} \le 3.6\ V$, $I_{OH} = -20\ mA$	$V_{DD} - 0.5$	—	—	V	1
	$1.71\ V \le V_{DD} \le 2.7\ V$, $I_{OH} = -10\ mA$	$V_{DD} - 0.5$	—	—	V	
I_{OHT}	Output high current total for all ports	—	—	100	mA	
V_{OL}	Output low voltage — Normal drive pad except RESET_B					
	$2.7\ V \le V_{DD} \le 3.6\ V$, $I_{OL} = 5\ mA$	—	—	0.5	V	1
	$1.71\ V \le V_{DD} \le 2.7\ V$, $I_{OL} = 2.5\ mA$	—	—	0.5	V	
V_{OL}	Output low voltage — High drive pad except RESET_B					
	$2.7\ V \le V_{DD} \le 3.6\ V$, $I_{OL} = 20\ mA$	—	—	0.5	V	1
	$1.71\ V \le V_{DD} \le 2.7\ V$, $I_{OL} = 10\ mA$	—	—	0.5	V	
V_{OL}	Output low voltage — RESET_B					

Table continues on the next page...

Table 3. Voltage and current operating behaviors (continued)

Symbol	Description	Min.	Typ.	Max.	Unit	Notes
	2.7 V ≤ V_{DD} ≤ 3.6 V, I_{OL} = 3 mA	—	—	0.5	V	
	1.71 V ≤ V_{DD} ≤ 2.7 V, I_{OL} = 1.5 mA	—	—	0.5	V	
I_{OLT}	Output low current total for all ports	—	—	100	mA	
I_{IN}	Input leakage current (per pin) for full temperature range					
	All pins other than high drive port pins	—	0.002	0.5	μA	1, 2
	High drive port pins	—	0.004	0.5	μA	
I_{IN}	Input leakage current (total all pins) for full temperature range	—	—	1.0	μA	2
R_{PU}	Internal pullup resistors	20	—	50	kΩ	3
R_{PD}	Internal pulldown resistors	20	—	50	kΩ	4

1. PTB0, PTB1, PTC3, PTC4, PTD4, PTD5, PTD6, and PTD7 I/O have both high drive and normal drive capability selected by the associated PTx_PCRn[DSE] control bit. All other GPIOs are normal drive only.
2. Measured at VDD=3.6V
3. Measured at V_{DD} supply voltage = V_{DD} min and Vinput = V_{SS}
4. Measured at V_{DD} supply voltage = V_{DD} min and Vinput = V_{DD}

2.2.4 Power mode transition operating behaviors

All specifications except t_{POR}, and VLLSx→RUN recovery times in the following table assume this clock configuration:

- CPU and system clocks = 72 MHz
- Bus clock = 36 MHz
- Flash clock = 24 MHz
- MCG mode: FEI

Table 4. Power mode transition operating behaviors

Symbol	Description	Min.	Typ.	Max.	Unit	Notes
t_{POR}	After a POR event, amount of time from the point V_{DD} reaches 1.71 V to execution of the first instruction across the operating temperature range of the chip.	—	—	300	μs	1
	• VLLS0 → RUN	—	—	135	μs	
	• VLLS1 → RUN	—	—	135	μs	
	• VLLS2 → RUN	—	—	75	μs	

Table continues on the next page...

Table 4. Power mode transition operating behaviors (continued)

Symbol	Description	Min.	Typ.	Max.	Unit	Notes
	• VLLS3 → RUN	—	—	75	μs	
	• VLPS → RUN	—	—	5.7	μs	
	• STOP → RUN	—	—	5.7	μs	

1. Normal boot (FTFA_OPT[LPBOOT]=1)

2.2.5 Power consumption operating behaviors

The current parameters in the table below are derived from code executing a while(1) loop from flash, unless otherwise noted.

The IDD typical values represent the statistical mean at 25°C, and the IDD maximum values for RUN, WAIT, VLPR, and VLPW represent data collected at 125°C junction temperature unless otherwise noted. The maximum values represent characterized results equivalent to the mean plus three times the standard deviation (mean + 3 sigma).

Table 5. Power consumption operating behaviors

Symbol	Description	Min.	Typ.	Max.	Unit	Notes
I_{DDA}	Analog supply current	—	—	See note	mA	1
I_{DD_HSRUN}	High Speed Run mode current - all peripheral clocks disabled, CoreMark benchmark code executing from flash					
	@ 1.8V	—	18.70	19.37	mA	2, 3, 4
	@ 3.0V	—	18.71	19.38	mA	
I_{DD_HSRUN}	High Speed Run mode current - all peripheral clocks disabled, code executing from flash					
	@ 1.8V	—	18.13	18.80	mA	4
	@ 3.0V	—	18.19	18.86	mA	
I_{DD_HSRUN}	High Speed Run mode current — all peripheral clocks enabled, code executing from flash					
	@ 1.8V	—	22.2	22.87	mA	5
	@ 3.0V	—	22.4	23.07	mA	
I_{DD_RUN}	Run mode current in Compute operation — CoreMark benchmark code executing from flash					
	@ 1.8V	—	12.74	13.41	mA	2, 3, 6
	@ 3.0V	—	12.82	13.49	mA	

Table continues on the next page...

Table 5. Power consumption operating behaviors (continued)

Symbol	Description	Min.	Typ.	Max.	Unit	Notes
I_{DD_RUN}	Run mode current in Compute operation — code executing from flash					
	@ 1.8V	—	12.10	13.10	mA	6
	@ 3.0V	—	12.20	13.37	mA	
I_{DD_RUN}	Run mode current — all peripheral clocks disabled, code executing from flash					
	@ 1.8V	—	12.8	13.47	mA	7
	@ 3.0V	—	12.9	13.57	mA	
I_{DD_RUN}	Run mode current — all peripheral clocks enabled, code executing from flash					
	@ 1.8V	—	14.8	15.47	mA	8
	@ 3.0V					
	• @ 25°C	—	14.9	15.57	mA	
	• @ 70°C	—	14.9	15.57	mA	
	• @ 85°C	—	14.9	15.57	mA	
	• @ 105°C	—	15.5	16.20	mA	
I_{DD_RUN}	Run mode current — Compute operation, code executing from flash					
	@ 1.8V	—	12.1	12.77	mA	9
	@ 3.0V					
	• @ 25°C	—	12.2	12.87	mA	
	• @ 70°C	—	12.2	12.87	mA	
	• @ 85°C	—	12.2	12.87	mA	
	• @ 105°C	—	12.7	13.37	mA	
I_{DD_WAIT}	Wait mode high frequency current at 3.0 V — all peripheral clocks disabled	—	5.5	6.17	mA	7
I_{DD_WAIT}	Wait mode reduced frequency current at 3.0 V — all peripheral clocks disabled	—	3.5	4.17	mA	10
I_{DD_VLPR}	Very-low-power run mode current in Compute operation — CoreMark benchmark code executing from flash					
	@ 1.8V	—	0.58	0.86	mA	2, 11, 3
	@ 3.0V	—	0.59	0.87	mA	
I_{DD_VLPR}	Very-low-power run mode current in Compute operation, code executing from flash					
	@ 1.8V	—	0.47	0.75	mA	11
	@ 3.0V	—	0.47	0.75	mA	
I_{DD_VLPR}	Very-low-power run mode current at 3.0 V — all peripheral clocks disabled	—	0.62	0.90	mA	12

Table continues on the next page...

Table 5. Power consumption operating behaviors (continued)

Symbol	Description	Min.	Typ.	Max.	Unit	Notes
I_{DD_VLPR}	Very-low-power run mode current at 3.0 V — all peripheral clocks enabled	—	0.76	1.04	mA	13
I_{DD_VLPW}	Very-low-power wait mode current at 3.0 V — all peripheral clocks disabled	—	0.28	0.56	mA	14
I_{DD_STOP}	Stop mode current at 3.0 V					
	@ -40°C to 25°C	—	0.26	0.33	mA	
	@ 70°C	—	0.30	0.47	mA	
	@ 85°C	—	0.35	0.52	mA	
	@ 105°C	—	0.43	0.60	mA	
I_{DD_VLPS}	Very-low-power stop mode current at 3.0 V					
	@ -40°C to 25°C	—	2.80	8.30	μA	
	@ 70°C	—	13.30	29.90	μA	
	@ 85°C	—	26.90	46.45	μA	
	@ 105°C	—	56.80	67.05	μA	
I_{DD_VLLS3}	Very low-leakage stop mode 3 current at 3.0 V					
	@ -40°C to 25°C	—	1.3	1.71	μA	
	@ 70°C	—	3.8	5.35	μA	
	@ 85°C	—	7.6	8.50	μA	
	@ 105°C	—	15.1	19.05	μA	
I_{DD_VLLS2}	Very low-leakage stop mode 2 current at 3.0 V					
	@ -40°C to 25°C	—	1.3	1.55	μA	
	@ 70°C	—	3.1	4.05	μA	
	@ 85°C	—	7.2	8.60	μA	
	@ 105°C	—	12.0	14.10	μA	
I_{DD_VLLS1}	Very low-leakage stop mode 1 current at 3.0 V					
	@ -40°C to 25°C	—	0.63	0.87	μA	
	@ 70°C	—	1.70	2.35	μA	
	@ 85°C	—	2.8	3.40	μA	
	@ 105°C	—	7.6	8.80	μA	
I_{DD_VLLS0}	Very low-leakage stop mode 0 current at 3.0 V with POR detect circuit enabled					
	@ -40°C to 25°C	—	0.35	0.46	μA	
	@ 70°C	—	1.38	1.94	μA	
	@ 85°C	—	2.4	2.95	μA	
	@ 105°C	—	7.3	8.45	μA	
I_{DD_VLLS0}	Very low-leakage stop mode 0 current at 3.0 V with POR detect circuit disabled					
	@ -40°C to 25°C	—	0.07	0.16	μA	
	@ 70°C	—	1.05	1.78	μA	
	@ 85°C	—	2.1	2.80	μA	

Table continues on the next page...

Table 5. Power consumption operating behaviors (continued)

Symbol	Description	Min.	Typ.	Max.	Unit	Notes
	@ 105°C	—	6.9	8.25	μA	

1. The analog supply current is the sum of the active or disabled current for each of the analog modules on the device. See each module's specification for its supply current.
2. Cache on and prefetch on, low compiler optimization
3. CoreMark benchmark compiled using IAR 7.2 with optimization level low
4. 100 MHz core and system clock, 50 MHz bus clock, and 25 MHz flash clock. MCG configured for FEE mode. All peripheral clocks disabled.
5. 100 MHz core and system clock, 50 MHz bus clock, and 25 MHz flash clock. MCG configured for FEI mode. All peripheral clocks enabled.
6. 72 MHz core and system clock, 36 MHz bus clock and 24 MHz flash clock. MCG configured for FEE mode. All peripheral clocks disabled. Compute operation.
7. 72 MHz core and system clock, 36 MHz bus clock, and 24 MHz flash clock. MCG configured for FEI mode. All peripheral clocks disabled.
8. 72 MHz core and system clock, 36 MHz bus clock, and 24 MHz flash clock. MCG configured for FEI mode. All peripheral clocks enabled.
9. 72MHz core and system clock, 36MHz bus clock, and 24MHz flash clock. MCG configured for FEI mode. Compute operation.
10. 25 MHz core and system clock, 25 MHz bus clock, and 25 MHz flash clock. MCG configured for FEI mode.
11. 4 MHz core, system, and bus clock, and 1 MHz flash clock. MCG configured for BLPE mode. Compute operation. Code executing from flash.
12. 4 MHz core, system, and bus clock, and 1 MHz flash clock. MCG configured for BLPE mode. All peripheral clocks disabled. Code executing from flash.
13. 4 MHz core, system, and bus clock, and 1 MHz flash clock. MCG configured for BLPE mode. All peripheral clocks enabled, but peripherals are not in active operation. Code executing from flash.
14. 4 MHz core, system, and bus clock, and 1 MHz flash clock. MCG configured for BLPE mode. All peripheral clocks disabled.

Table 6. Low power mode peripheral adders—typical value

Symbol	Description	Temperature (°C)						Unit
		-40	25	50	70	85	105	
$I_{IREFSTEN4MHz}$	4 MHz internal reference clock (IRC) adder. Measured by entering STOP or VLPS mode with 4 MHz IRC enabled.	56	56	56	56	56	56	μA
$I_{IREFSTEN32KHz}$	32 kHz internal reference clock (IRC) adder. Measured by entering STOP mode with the 32 kHz IRC enabled.	52	52	52	52	52	52	μA
$I_{EREFSTEN4MHz}$	External 4 MHz crystal clock adder. Measured by entering STOP or VLPS mode with the crystal enabled.	206	228	237	245	251	258	uA
$I_{EREFSTEN32KHz}$	External 32 kHz crystal clock adder by means of the OSC0_CR[EREFSTEN and EREFSTEN] bits. Measured by entering all modes with the crystal enabled.							
	VLLS1	440	490	540	560	570	580	nA
	VLLS3	440	490	540	560	570	580	
	LLS	490	490	540	560	570	680	

Table continues on the next page...

Table 6. Low power mode peripheral adders—typical value (continued)

Symbol	Description	Temperature (°C)						Unit
		-40	25	50	70	85	105	
	VLPS	510	560	560	560	610	680	
	STOP	510	560	560	560	610	680	
I_{48MIRC}	48 Mhz internal reference clock	350	350	350	350	350	350	μA
I_{CMP}	CMP peripheral adder measured by placing the device in VLLS1 mode with CMP enabled using the 6-bit DAC and a single external input for compare. Includes 6-bit DAC power consumption.	22	22	22	22	22	22	μA
I_{UART}	UART peripheral adder measured by placing the device in STOP or VLPS mode with selected clock source waiting for RX data at 115200 baud rate. Includes selected clock source power consumption.							
	MCGIRCLK (4 MHz internal reference clock)	66	66	66	66	66	66	μA
	>OSCERCLK (4 MHz external crystal)	214	237	246	254	260	268	
I_{BG}	Bandgap adder when BGEN bit is set and device is placed in VLPx, LLS, or VLLSx mode.	45	45	45	45	45	45	μA
I_{ADC}	ADC peripheral adder combining the measured values at V_{DD} and V_{DDA} by placing the device in STOP or VLPS mode. ADC is configured for low power mode using the internal clock and continuous conversions.	42	42	42	42	42	42	μA

2.2.5.1 Diagram: Typical IDD_RUN operating behavior

The following data was measured under these conditions:

- MCG in FBE mode for 50 MHz and lower frequencies. MCG in FEE mode at frequencies between 50 MHz and 100MHz.
- No GPIOs toggled
- Code execution from flash with cache enabled
- For the ALLOFF curve, all peripheral clocks are disabled except FTFA

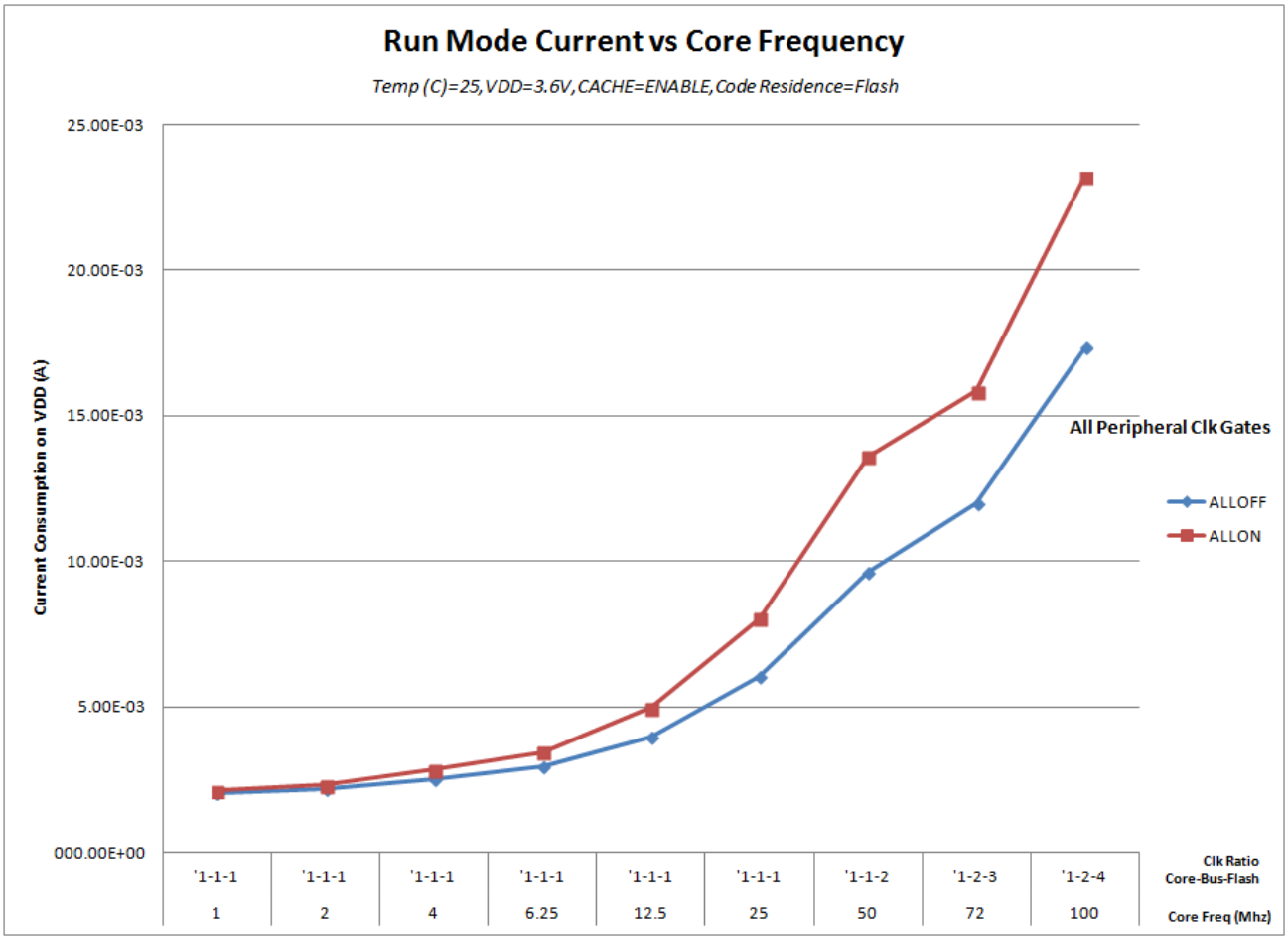

Figure 3. Run mode supply current vs. core frequency

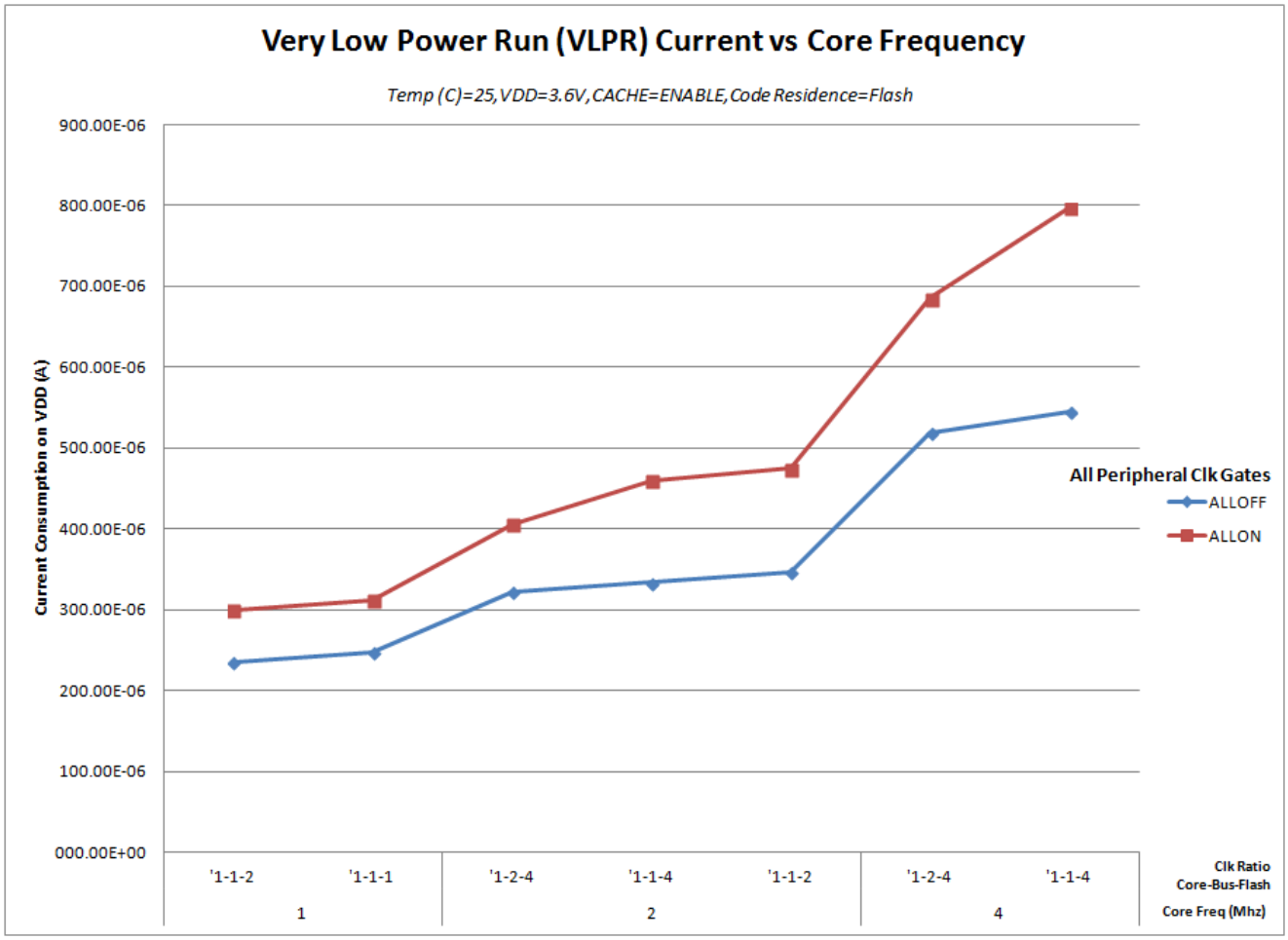

Figure 4. VLPR mode supply current vs. core frequency

2.2.6 EMC radiated emissions operating behaviors

Table 7. EMC radiated emissions operating behaviors for 64 LQFP package

Parameter	Conditions	Clocks	Frequency range	Level (Typ.)	Unit	Notes
V_{EME}	Device configuration, test conditions and EM testing per standard IEC 61967-2. Supply voltage: VDD = 3.3 V Temp = 25°C	FSYS = 100 MHz FBUS = 50 MHz External crystal = 10 MHz	150 kHz–50 MHz	11	dBuV	1, 2, 3
			50 MHz–150 MHz	12		
			150 MHz–500 MHz	11		
			500 MHz–1000 MHz	8		
			IEC level	N		4

1. Measurements were made per IEC 61967-2 while the device was running typical application code.
2. Measurements were performed on a similar 64LQFP device.
3. The reported emission level is the value of the maximum measured emission, rounded up to the next whole number, from among the measured orientations in each frequency range.

4. IEC Level Maximums: N ≤ 12dBmV, M ≤ 18dBmV, L ≤ 24dBmV, K ≤ 30dBmV, I ≤ 36dBmV .

2.2.7 Designing with radiated emissions in mind

To find application notes that provide guidance on designing your system to minimize interference from radiated emissions:

- Go to nxp.com
- Perform a keyword search for “EMC design.”

2.2.8 Capacitance attributes

Table 8. Capacitance attributes

Symbol	Description	Min.	Max.	Unit
C_{IN_A}	Input capacitance: analog pins	—	7	pF
C_{IN_D}	Input capacitance: digital pins	—	7	pF

2.3 Switching specifications

2.3.1 Device clock specifications

Table 9. Device clock specifications

Symbol	Description	Min.	Max.	Unit	Notes
High Speed run mode					
f_{SYS}	System and core clock	—	100	MHz	
f_{BUS}	Bus clock	—	50	MHz	
Normal run mode (and High Speed run mode unless otherwise specified above)					
f_{SYS}	System and core clock	—	72	MHz	
f_{BUS}	Bus clock	—	50	MHz	
f_{FLASH}	Flash clock	—	25	MHz	
f_{LPTMR}	LPTMR clock	—	25	MHz	
VLPR mode[1]					
f_{SYS}	System and core clock	—	4	MHz	
f_{BUS}	Bus clock	—	4	MHz	
f_{FLASH}	Flash clock	—	1	MHz	
f_{ERCLK}	External reference clock	—	16	MHz	
f_{LPTMR_pin}	LPTMR clock	—	25	MHz	

Table continues on the next page...

Table 9. Device clock specifications (continued)

Symbol	Description	Min.	Max.	Unit	Notes
f_{LPTMR_ERCLK}	LPTMR external reference clock	—	16	MHz	

1. The frequency limitations in VLPR mode here override any frequency specification listed in the timing specification for any other module.

2.3.2 General switching specifications

These general purpose specifications apply to all signals configured for GPIO, UART, and timers.

Table 10. General switching specifications

Symbol	Description	Min.	Max.	Unit	Notes
	GPIO pin interrupt pulse width (digital glitch filter disabled) — Synchronous path	1.5	—	Bus clock cycles	1, 2
	External RESET and NMI pin interrupt pulse width — Asynchronous path	100	—	ns	3
	GPIO pin interrupt pulse width (digital glitch filter disabled, passive filter disabled) — Asynchronous path	50	—	ns	4
	Port rise and fall time				5
	• Slew disabled	—			
	• $1.71 \le V_{DD} \le 2.7V$	—	10	ns	
	• $2.7 \le V_{DD} \le 3.6V$		5	ns	
	• Slew enabled	—			
	• $1.71 \le V_{DD} \le 2.7V$	—	30	ns	
	• $2.7 \le V_{DD} \le 3.6V$		16	ns	

1. This is the minimum pulse width that is guaranteed to pass through the pin synchronization circuitry. Shorter pulses may or may not be recognized. In Stop, VLPS, LLS, and VLLSx modes, the synchronizer is bypassed so shorter pulses can be recognized in that case.
2. The greater of synchronous and asynchronous timing must be met.
3. These pins have a passive filter enabled on the inputs. This is the shortest pulse width that is guaranteed to be recognized.
4. These pins do not have a passive filter on the inputs. This is the shortest pulse width that is guaranteed to be recognized.
5. 25 pF load

2.4 Thermal specifications

2.4.1 Thermal operating requirements

Table 11. Thermal operating requirements

Symbol	Description	Min.	Max.	Unit	Notes
T_J	Die junction temperature	–40	125	°C	
T_A	Ambient temperature	–40	105	°C	1

1. Maximum T_A can be exceeded only if the user ensures that T_J does not exceed maximum T_J. The simplest method to determine T_J is: $T_J = T_A + R_{\Theta JA} \times$ chip power dissipation.

2.4.2 Thermal attributes

Board type	Symbol	Description	64 LQFP	48 LQFP	32 QFN	Unit	Notes
Single-layer (1s)	$R_{\theta JA}$	Thermal resistance, junction to ambient (natural convection)	66	79	97	°C/W	1
Four-layer (2s2p)	$R_{\theta JA}$	Thermal resistance, junction to ambient (natural convection)	48	55	33	°C/W	1
Single-layer (1s)	$R_{\theta JMA}$	Thermal resistance, junction to ambient (200 ft./min. air speed)	54	67	81	°C/W	1
Four-layer (2s2p)	$R_{\theta JMA}$	Thermal resistance, junction to ambient (200 ft./min. air speed)	41	49	28	°C/W	1
—	$R_{\theta JB}$	Thermal resistance, junction to board	30	33	13	°C/W	2
—	$R_{\theta JC}$	Thermal resistance, junction to case	17	23	2.0	°C/W	3
—	Ψ_{JT}	Thermal characterizati	3	5	6	°C/W	4

Board type	Symbol	Description	64 LQFP	48 LQFP	32 QFN	Unit	Notes
		on parameter, junction to package top outside center (natural convection)					

1. Determined according to JEDEC Standard JESD51-2, *Integrated Circuits Thermal Test Method Environmental Conditions—Natural Convection (Still Air)*, or EIA/JEDEC Standard JESD51-6, *Integrated Circuit Thermal Test Method Environmental Conditions—Forced Convection (Moving Air)*.
2. Determined according to JEDEC Standard JESD51-8, *Integrated Circuit Thermal Test Method Environmental Conditions—Junction-to-Board*.
3. Determined according to Method 1012.1 of MIL-STD 883, *Test Method Standard, Microcircuits*, with the cold plate temperature used for the case temperature. The value includes the thermal resistance of the interface material between the top of the package and the cold plate.
4. Determined according to JEDEC Standard JESD51-2, *Integrated Circuits Thermal Test Method Environmental Conditions—Natural Convection (Still Air)*.

3 Peripheral operating requirements and behaviors

3.1 Core modules

3.1.1 SWD electricals

Table 12. SWD full voltage range electricals

Symbol	Description	Min.	Max.	Unit
	Operating voltage	1.71	3.6	V
S1	SWD_CLK frequency of operation • Serial wire debug	0	33	MHz
S2	SWD_CLK cycle period	1/S1	—	ns
S3	SWD_CLK clock pulse width • Serial wire debug	15	—	ns
S4	SWD_CLK rise and fall times	—	3	ns
S9	SWD_DIO input data setup time to SWD_CLK rise	8	—	ns
S10	SWD_DIO input data hold time after SWD_CLK rise	1.4	—	ns
S11	SWD_CLK high to SWD_DIO data valid	—	25	ns
S12	SWD_CLK high to SWD_DIO high-Z	5	—	ns

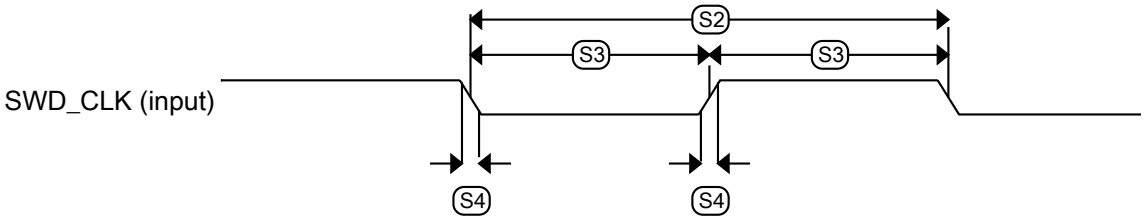

Figure 5. Serial wire clock input timing

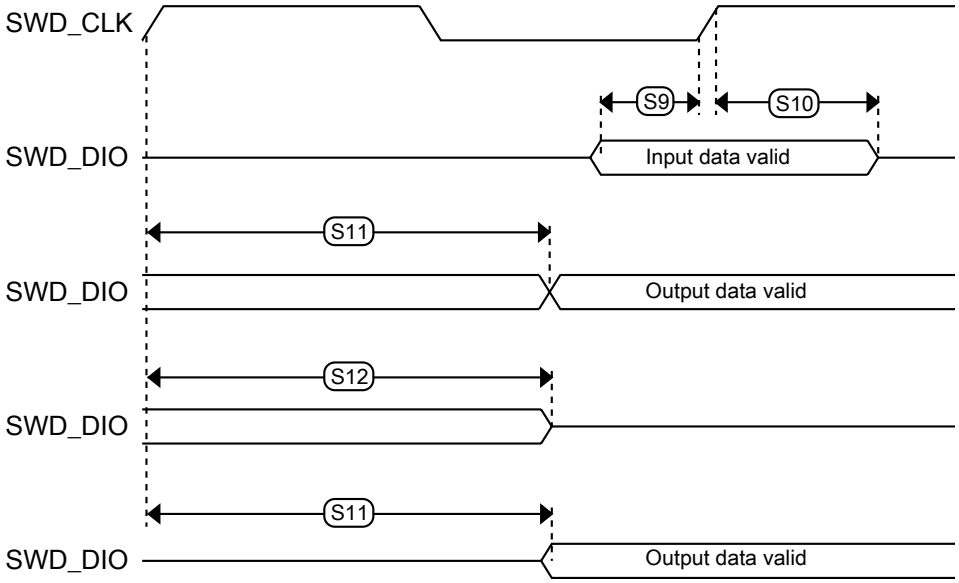

Figure 6. Serial wire data timing

3.1.2 JTAG electricals

Table 13. JTAG limited voltage range electricals

Symbol	Description	Min.	Max.	Unit
	Operating voltage	2.7	3.6	V
J1	TCLK frequency of operation • Boundary Scan • JTAG and CJTAG	 0 0	 10 20	MHz
J2	TCLK cycle period	1/J1	—	ns
J3	TCLK clock pulse width	50	—	ns

Table continues on the next page...

Table 13. JTAG limited voltage range electricals (continued)

Symbol	Description	Min.	Max.	Unit
	• Boundary Scan • JTAG and CJTAG	25	—	ns
J4	TCLK rise and fall times	—	3	ns
J5	Boundary scan input data setup time to TCLK rise	20	—	ns
J6	Boundary scan input data hold time after TCLK rise	1	—	ns
J7	TCLK low to boundary scan output data valid	—	25	ns
J8	TCLK low to boundary scan output high-Z	—	25	ns
J9	TMS, TDI input data setup time to TCLK rise	8	—	ns
J10	TMS, TDI input data hold time after TCLK rise	1	—	ns
J11	TCLK low to TDO data valid	—	19	ns
J12	TCLK low to TDO high-Z	—	19	ns
J13	$\overline{\text{TRST}}$ assert time	100	—	ns
J14	$\overline{\text{TRST}}$ setup time (negation) to TCLK high	8	—	ns

Table 14. JTAG full voltage range electricals

Symbol	Description	Min.	Max.	Unit
	Operating voltage	1.71	3.6	V
J1	TCLK frequency of operation • Boundary Scan • JTAG and CJTAG	 0 0	 10 15	MHz
J2	TCLK cycle period	1/J1	—	ns
J3	TCLK clock pulse width • Boundary Scan • JTAG and CJTAG	 50 33	 — —	 ns ns
J4	TCLK rise and fall times	—	3	ns
J5	Boundary scan input data setup time to TCLK rise	20	—	ns
J6	Boundary scan input data hold time after TCLK rise	1.4	—	ns
J7	TCLK low to boundary scan output data valid	—	27	ns
J8	TCLK low to boundary scan output high-Z	—	27	ns
J9	TMS, TDI input data setup time to TCLK rise	8	—	ns
J10	TMS, TDI input data hold time after TCLK rise	1.4	—	ns
J11	TCLK low to TDO data valid	—	26.2	ns
J12	TCLK low to TDO high-Z	—	26.2	ns
J13	$\overline{\text{TRST}}$ assert time	100	—	ns
J14	$\overline{\text{TRST}}$ setup time (negation) to TCLK high	8	—	ns

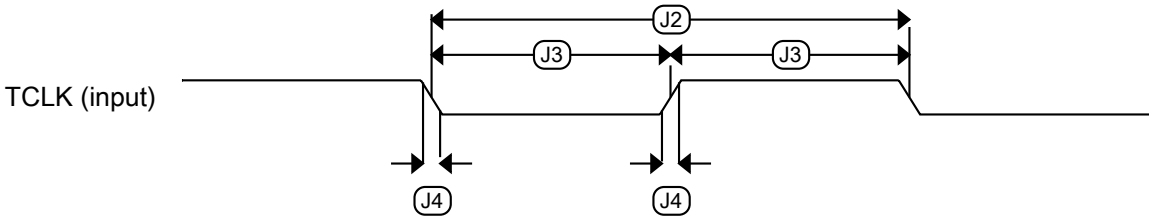

Figure 7. Test clock input timing

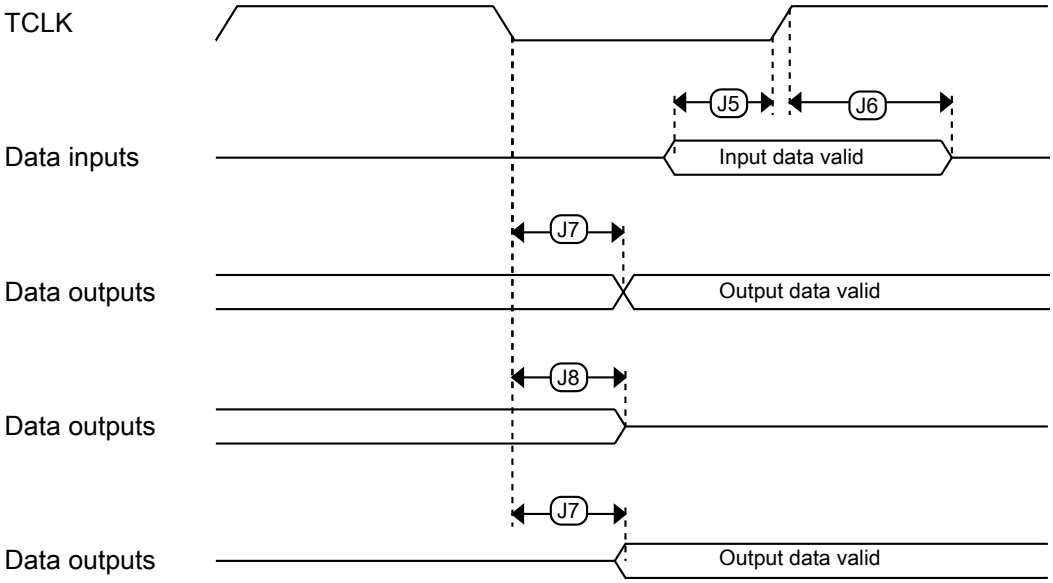

Figure 8. Boundary scan (JTAG) timing

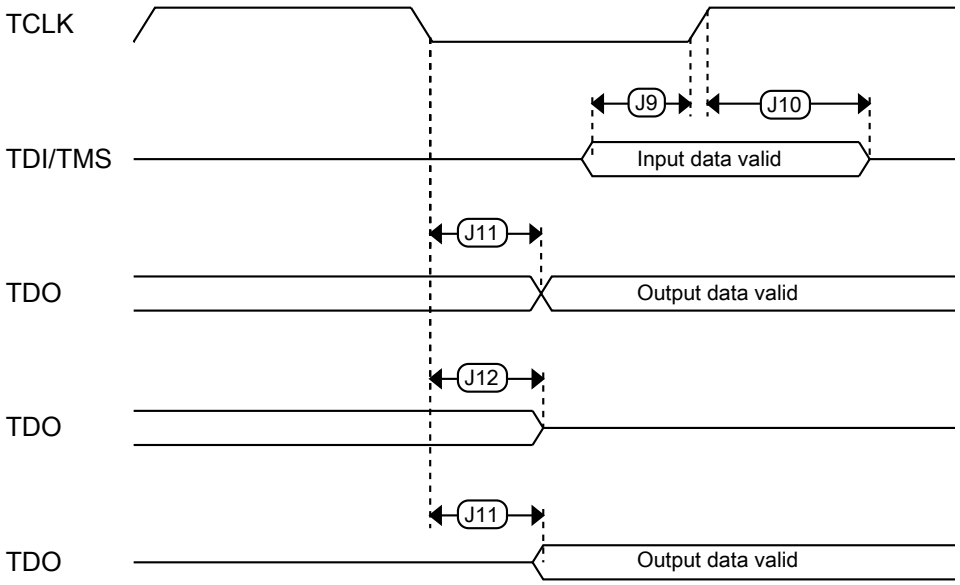

Figure 9. Test Access Port timing

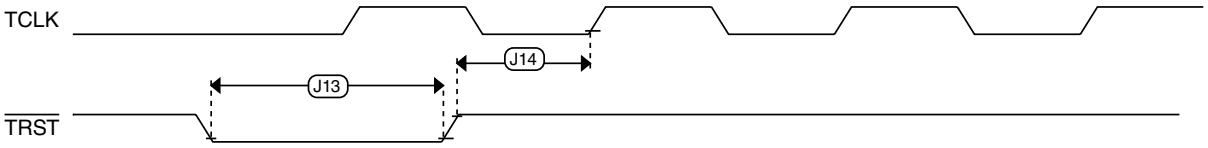

Figure 10. $\overline{\text{TRST}}$ timing

3.2 System modules

There are no specifications necessary for the device's system modules.

3.3 Clock modules

3.3.1 MCG specifications

Table 15. MCG specifications

Symbol	Description		Min.	Typ.	Max.	Unit	Notes
f_{ints_ft}	Internal reference frequency (slow clock) — factory trimmed at nominal VDD and 25 °C		—	32.768	—	kHz	
Δf_{ints_t}	Total deviation of internal reference frequency (slow clock) over voltage and temperature		—	+0.5/-0.7	± 2	%	
f_{ints_t}	Internal reference frequency (slow clock) — user trimmed		31.25	—	39.0625	kHz	
$\Delta_{fdco_res_t}$	Resolution of trimmed average DCO output frequency at fixed voltage and temperature — using SCTRIM and SCFTRIM		—	± 0.3	± 0.6	$\%f_{dco}$	1
Δf_{dco_t}	Total deviation of trimmed average DCO output frequency over voltage and temperature		—	+0.5/-0.7	± 2	$\%f_{dco}$	1, 2
Δf_{dco_t}	Total deviation of trimmed average DCO output frequency over fixed voltage and temperature range of 0–70°C		—	± 0.3	± 1.5	$\%f_{dco}$	1
f_{intf_ft}	Internal reference frequency (fast clock) — factory trimmed at nominal VDD and 25°C		—	4	—	MHz	
Δf_{intf_ft}	Frequency deviation of internal reference clock (fast clock) over temperature and voltage — factory trimmed at nominal VDD and 25 °C		—	+1/-2	± 5	$\%f_{intf_ft}$	
f_{intf_t}	Internal reference frequency (fast clock) — user trimmed at nominal VDD and 25 °C		3	—	5	MHz	
f_{loc_low}	Loss of external clock minimum frequency — RANGE = 00		(3/5) x f_{ints_t}	—	—	kHz	
f_{loc_high}	Loss of external clock minimum frequency — RANGE = 01, 10, or 11		(16/5) x f_{ints_t}	—	—	kHz	
FLL							
f_{fll_ref}	FLL reference frequency range		31.25	—	39.0625	kHz	
f_{dco}	DCO output frequency range	Low range (DRS=00) $640 \times f_{fll_ref}$	20	20.97	25	MHz	3, 4
		Mid range (DRS=01) $1280 \times f_{fll_ref}$	40	41.94	50	MHz	
		Mid-high range (DRS=10) $1920 \times f_{fll_ref}$	60	62.91	75	MHz	
		High range (DRS=11) $2560 \times f_{fll_ref}$	80	83.89	100	MHz	
$f_{dco_t_DMX32}$	DCO output frequency	Low range (DRS=00) $732 \times f_{fll_ref}$	—	23.99	—	MHz	5, 6
		Mid range (DRS=01) $1464 \times f_{fll_ref}$	—	47.97	—	MHz	
		Mid-high range (DRS=10)	—	71.99	—	MHz	

Table continues on the next page...

Table 15. MCG specifications (continued)

Symbol	Description		Min.	Typ.	Max.	Unit	Notes
		2197 × f_{fll_ref}					
		High range (DRS=11) 2929 × f_{fll_ref}	—	95.98	—	MHz	
J_{cyc_fll}	FLL period jitter • f_{VCO} = 48 MHz • f_{VCO} = 98 MHz		— —	— 180 150	— —	ps	
$t_{fll_acquire}$	FLL target frequency acquisition time		—	—	1	ms	7

1. This parameter is measured with the internal reference (slow clock) being used as a reference to the FLL (FEI clock mode).
2. 2.0 V <= VDD <= 3.6 V.
3. These typical values listed are with the slow internal reference clock (FEI) using factory trim and DMX32=0.
4. The resulting system clock frequencies should not exceed their maximum specified values. The DCO frequency deviation (Δf_{dco_t}) over voltage and temperature should be considered.
5. These typical values listed are with the slow internal reference clock (FEI) using factory trim and DMX32=1.
6. The resulting clock frequency must not exceed the maximum specified clock frequency of the device.
7. This specification applies to any time the FLL reference source or reference divider is changed, trim value is changed, DMX32 bit is changed, DRS bits are changed, or changing from FLL disabled (BLPE, BLPI) to FLL enabled (FEI, FEE, FBE, FBI). If a crystal/resonator is being used as the reference, this specification assumes it is already running.

3.3.2 IRC48M specifications

Table 16. IRC48M specifications

Symbol	Description	Min.	Typ.	Max.	Unit	Notes
V_{DD}	Supply voltage	1.71	—	3.6	V	
I_{DD48M}	Supply current	—	400	500	μA	
f_{irc48m}	Internal reference frequency	—	48	—	MHz	
Δf_{irc48m_hv}	Total deviation of IRC48M frequency at high voltage (VDD=1.89V-3.6V) over full temperature	—	± 0.5	± 1.5	$\%f_{irc48m}$	
Δf_{irc48m_hv}	Total deviation of IRC48M frequency at high voltage (VDD=1.89V-3.6V) over -40°C to 85°C	—	± 0.5	± 1.0	$\%f_{irc48m}$	
Δf_{irc48m_lv}	Total deviation of IRC48M frequency at low voltage (VDD=1.71V-1.89V) over full temperature	—	± 0.5	± 2.0	$\%f_{irc48m}$	
J_{cyc_irc48m}	Period Jitter (RMS)	—	35	150	ps	
$t_{irc48mst}$	Startup time	—	2	3	μs	1

1. IRC48M startup time is defined as the time between clock enablement and clock availability for system use. Enable the clock by one of the following settings:
   - MCG operating in an external clocking mode and MCG_C7[OSCSEL]=10 or MCG_C5[PLLCLKEN0]=1, or
   - SIM_SOPT2[PLLFLLSEL]=11

3.3.3 Oscillator electrical specifications

3.3.3.1 Oscillator DC electrical specifications

Table 17. Oscillator DC electrical specifications

Symbol	Description	Min.	Typ.	Max.	Unit	Notes
V_{DD}	Supply voltage	1.71	—	3.6	V	
I_{DDOSC}	Supply current — low-power mode (HGO=0)					1
	• 32 kHz	—	500	—	nA	
	• 4 MHz	—	200	—	μA	
	• 8 MHz (RANGE=01)	—	300	—	μA	
	• 16 MHz	—	950	—	μA	
	• 24 MHz	—	1.2	—	mA	
	• 32 MHz	—	1.5	—	mA	
I_{DDOSC}	Supply current — high-gain mode (HGO=1)					1
	• 32 kHz	—	25	—	μA	
	• 4 MHz	—	400	—	μA	
	• 8 MHz (RANGE=01)	—	500	—	μA	
	• 16 MHz	—	2.5	—	mA	
	• 24 MHz	—	3	—	mA	
	• 32 MHz	—	4	—	mA	
C_x	EXTAL load capacitance	—	—	—		2, 3
C_y	XTAL load capacitance	—	—	—		2, 3
R_F	Feedback resistor — low-frequency, low-power mode (HGO=0)	—	—	—	MΩ	2, 4
	Feedback resistor — low-frequency, high-gain mode (HGO=1)	—	10	—	MΩ	
	Feedback resistor — high-frequency, low-power mode (HGO=0)	—	—	—	MΩ	
	Feedback resistor — high-frequency, high-gain mode (HGO=1)	—	1	—	MΩ	
R_S	Series resistor — low-frequency, low-power mode (HGO=0)	—	—	—	kΩ	
	Series resistor — low-frequency, high-gain mode (HGO=1)	—	200	—	kΩ	
	Series resistor — high-frequency, low-power mode (HGO=0)	—	—	—	kΩ	
	Series resistor — high-frequency, high-gain mode (HGO=1)	—	0	—	kΩ	

Table continues on the next page...

Table 17. Oscillator DC electrical specifications (continued)

Symbol	Description	Min.	Typ.	Max.	Unit	Notes
V_{pp}[5]	Peak-to-peak amplitude of oscillation (oscillator mode) — low-frequency, low-power mode (HGO=0)	—	0.6	—	V	
	Peak-to-peak amplitude of oscillation (oscillator mode) — low-frequency, high-gain mode (HGO=1)	—	V_{DD}	—	V	
	Peak-to-peak amplitude of oscillation (oscillator mode) — high-frequency, low-power mode (HGO=0)	—	0.6	—	V	
	Peak-to-peak amplitude of oscillation (oscillator mode) — high-frequency, high-gain mode (HGO=1)	—	V_{DD}	—	V	

1. V_{DD}=3.3 V, Temperature =25 °C
2. See crystal or resonator manufacturer's recommendation
3. C_x and C_y can be provided by using either integrated capacitors or external components.
4. When low-power mode is selected, R_F is integrated and must not be attached externally.
5. The EXTAL and XTAL pins should only be connected to required oscillator components and must not be connected to any other device.

3.3.3.2 Oscillator frequency specifications

Table 18. Oscillator frequency specifications

Symbol	Description	Min.	Typ.	Max.	Unit	Notes
f_{osc_lo}	Oscillator crystal or resonator frequency — low-frequency mode (MCG_C2[RANGE]=00)	32	—	40	kHz	
$f_{osc_hi_1}$	Oscillator crystal or resonator frequency — high-frequency mode (low range) (MCG_C2[RANGE]=01)	3	—	8	MHz	
$f_{osc_hi_2}$	Oscillator crystal or resonator frequency — high frequency mode (high range) (MCG_C2[RANGE]=1x)	8	—	32	MHz	
f_{ec_extal}	Input clock frequency (external clock mode)	—	—	50	MHz	1, 2
t_{dc_extal}	Input clock duty cycle (external clock mode)	40	50	60	%	
t_{cst}	Crystal startup time — 32 kHz low-frequency, low-power mode (HGO=0)	—	750	—	ms	3, 4
	Crystal startup time — 32 kHz low-frequency, high-gain mode (HGO=1)	—	250	—	ms	
	Crystal startup time — 8 MHz high-frequency (MCG_C2[RANGE]=01), low-power mode (HGO=0)	—	0.6	—	ms	
	Crystal startup time — 8 MHz high-frequency (MCG_C2[RANGE]=01), high-gain mode (HGO=1)	—	1	—	ms	

1. Other frequency limits may apply when external clock is being used as a reference for the FLL

2. When transitioning from FEI or FBI to FBE mode, restrict the frequency of the input clock so that, when it is divided by FRDIV, it remains within the limits of the DCO input clock frequency.
3. Proper PC board layout procedures must be followed to achieve specifications.
4. Crystal startup time is defined as the time between the oscillator being enabled and the OSCINIT bit in the MCG_S register being set.

3.4 Memories and memory interfaces

3.4.1 Flash electrical specifications

This section describes the electrical characteristics of the flash memory module.

3.4.1.1 Flash timing specifications — program and erase

The following specifications represent the amount of time the internal charge pumps are active and do not include command overhead.

Table 19. NVM program/erase timing specifications

Symbol	Description	Min.	Typ.	Max.	Unit	Notes
t_{hvpgm4}	Longword Program high-voltage time	—	7.5	18	μs	—
$t_{hversscr}$	Sector Erase high-voltage time	—	13	113	ms	1
$t_{hversall}$	Erase All high-voltage time	—	104	904	ms	1

1. Maximum time based on expectations at cycling end-of-life.

3.4.1.2 Flash timing specifications — commands

Table 20. Flash command timing specifications

Symbol	Description	Min.	Typ.	Max.	Unit	Notes
$t_{rd1sec2k}$	Read 1s Section execution time (flash sector)	—	—	60	μs	1
t_{pgmchk}	Program Check execution time	—	—	45	μs	1
t_{rdrsrc}	Read Resource execution time	—	—	30	μs	1
t_{pgm4}	Program Longword execution time	—	65	145	μs	—
t_{ersscr}	Erase Flash Sector execution time	—	14	114	ms	2
t_{rd1all}	Read 1s All Blocks execution time	—	—	0.9	ms	1
t_{rdonce}	Read Once execution time	—	—	30	μs	1
$t_{pgmonce}$	Program Once execution time	—	100	—	μs	—
t_{ersall}	Erase All Blocks execution time	—	140	1150	ms	2
t_{vfykey}	Verify Backdoor Access Key execution time	—	—	30	μs	1

1. Assumes 25 MHz flash clock frequency.

2. Maximum times for erase parameters based on expectations at cycling end-of-life.

3.4.1.3 Flash high voltage current behaviors

Table 21. Flash high voltage current behaviors

Symbol	Description	Min.	Typ.	Max.	Unit
I_{DD_PGM}	Average current adder during high voltage flash programming operation	—	2.5	6.0	mA
I_{DD_ERS}	Average current adder during high voltage flash erase operation	—	1.5	4.0	mA

3.4.1.4 Reliability specifications

Table 22. NVM reliability specifications

Symbol	Description	Min.	Typ.[1]	Max.	Unit	Notes
Program Flash						
$t_{nvmretp10k}$	Data retention after up to 10 K cycles	5	50	—	years	—
$t_{nvmretp1k}$	Data retention after up to 1 K cycles	20	100	—	years	—
$n_{nvmcycp}$	Cycling endurance	10 K	50 K	—	cycles	2

1. Typical data retention values are based on measured response accelerated at high temperature and derated to a constant 25 °C use profile. Engineering Bulletin EB618 does not apply to this technology. Typical endurance defined in Engineering Bulletin EB619.
2. Cycling endurance represents number of program/erase cycles at –40 °C ≤ T_j ≤ 125 °C.

3.5 Security and integrity modules

There are no specifications necessary for the device's security and integrity modules.

3.6 Analog

3.6.1 ADC electrical specifications

The 16-bit accuracy specifications listed in Table 23 and Table 24 are achievable on the differential pins ADCx_DPx, ADCx_DMx.

All other ADC channels meet the 13-bit differential/12-bit single-ended accuracy specifications.

3.6.1.1 16-bit ADC operating conditions

Table 23. 16-bit ADC operating conditions

Symbol	Description	Conditions	Min.	Typ.[1]	Max.	Unit	Notes
V_{DDA}	Supply voltage	Absolute	1.71	—	3.6	V	
ΔV_{DDA}	Supply voltage	Delta to V_{DD} ($V_{DD} – V_{DDA}$)	-100	0	+100	mV	2
ΔV_{SSA}	Ground voltage	Delta to V_{SS} ($V_{SS} – V_{SSA}$)	-100	0	+100	mV	2
V_{REFH}	ADC reference voltage high		1.13	V_{DDA}	V_{DDA}	V	
V_{REFL}	ADC reference voltage low		V_{SSA}	V_{SSA}	V_{SSA}	V	
V_{ADIN}	Input voltage	• 16-bit differential mode • All other modes	VREFL VREFL	— —	31/32 * VREFH VREFH	V	
C_{ADIN}	Input capacitance	• 16-bit mode • 8-bit / 10-bit / 12-bit modes	— —	8 4	10 5	pF	
R_{ADIN}	Input series resistance		—	2	5	kΩ	
R_{AS}	Analog source resistance (external)	13-bit / 12-bit modes f_{ADCK} < 4 MHz	—	—	5	kΩ	3
f_{ADCK}	ADC conversion clock frequency	≤ 13-bit mode	1.0	—	24.0	MHz	4
f_{ADCK}	ADC conversion clock frequency	16-bit mode	2.0	—	12.0	MHz	4
C_{rate}	ADC conversion rate	≤ 13-bit modes No ADC hardware averaging Continuous conversions enabled, subsequent conversion time	20	—	1200	Ksps	5
C_{rate}	ADC conversion rate	16-bit mode No ADC hardware averaging Continuous conversions enabled, subsequent conversion time	37	—	461	Ksps	5

1. Typical values assume V_{DDA} = 3.0 V, Temp = 25 °C, f_{ADCK} = 1.0 MHz, unless otherwise stated. Typical values are for reference only, and are not tested in production.
2. DC potential difference.
3. This resistance is external to MCU. To achieve the best results, the analog source resistance must be kept as low as possible. The results in this data sheet were derived from a system that had < 8 Ω analog source resistance. The R_{AS}/C_{AS} time constant should be kept to < 1 ns.
4. To use the maximum ADC conversion clock frequency, CFG2[ADHSC] must be set and CFG1[ADLPC] must be clear.
5. For guidelines and examples of conversion rate calculation, download the ADC calculator tool.

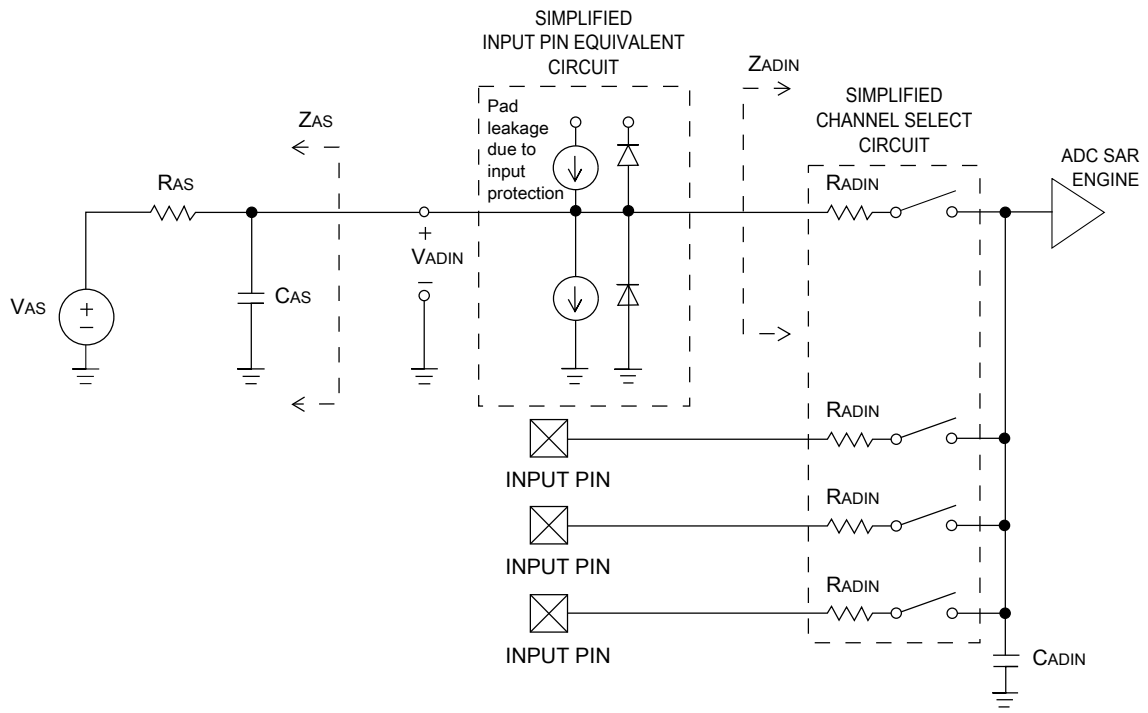

Figure 11. ADC input impedance equivalency diagram

3.6.1.2 16-bit ADC electrical characteristics

Table 24. 16-bit ADC characteristics ($V_{REFH} = V_{DDA}$, $V_{REFL} = V_{SSA}$)

Symbol	Description	Conditions[1]	Min.	Typ.[2]	Max.	Unit	Notes
I_{DDA_ADC}	Supply current		0.215	—	1.7	mA	3
f_{ADACK}	ADC asynchronous clock source	• ADLPC = 1, ADHSC = 0 • ADLPC = 1, ADHSC = 1 • ADLPC = 0, ADHSC = 0 • ADLPC = 0, ADHSC = 1	1.2 2.4 3.0 4.4	2.4 4.0 5.2 6.2	3.9 6.1 7.3 9.5	MHz MHz MHz MHz	$t_{ADACK} = 1/f_{ADACK}$
	Sample Time	See Reference Manual chapter for sample times					
TUE	Total unadjusted error	• 12-bit modes • <12-bit modes	— —	±4 ±1.4	±6.8 ±2.1	LSB[4]	5
DNL	Differential non-linearity	• 12-bit modes • <12-bit modes	— —	±0.7 ±0.2	–1.1 to +1.9 –0.3 to 0.5	LSB[4]	5
INL	Integral non-linearity	• 12-bit modes	—	±1.0	–2.7 to +1.9	LSB[4]	5

Table continues on the next page...

Table 24. 16-bit ADC characteristics ($V_{REFH} = V_{DDA}$, $V_{REFL} = V_{SSA}$) (continued)

Symbol	Description	Conditions[1]	Min.	Typ.[2]	Max.	Unit	Notes
		• <12-bit modes	—	±0.5	–0.7 to +0.5		
E_{FS}	Full-scale error	• 12-bit modes • <12-bit modes	— —	–4 –1.4	–5.4 –1.8	LSB[4]	$V_{ADIN} = V_{DDA}$[5]
E_Q	Quantization error	• 16-bit modes • ≤13-bit modes	— —	–1 to 0 —	— ±0.5	LSB[4]	
ENOB	Effective number of bits	16-bit differential mode • Avg = 32 • Avg = 4 16-bit single-ended mode • Avg = 32 • Avg = 4	 12.8 11.9 12.2 11.4	 14.5 13.8 13.9 13.1	 — — — —	 bits bits bits bits	6
SINAD	Signal-to-noise plus distortion	See ENOB	6.02 × ENOB + 1.76			dB	
THD	Total harmonic distortion	16-bit differential mode • Avg = 32 16-bit single-ended mode • Avg = 32	 — —	 -94 -85	 — —	dB dB	7
SFDR	Spurious free dynamic range	16-bit differential mode • Avg = 32 16-bit single-ended mode • Avg = 32	 82 78	 95 90	 — —	 dB dB	7
E_{IL}	Input leakage error		$I_{In} \times R_{AS}$			mV	I_{In} = leakage current (refer to the MCU's voltage and current operating ratings)
	Temp sensor slope	Across the full temperature range of the device	1.55	1.62	1.69	mV/°C	8
V_{TEMP25}	Temp sensor voltage	25 °C	706	716	726	mV	8

1. All accuracy numbers assume the ADC is calibrated with $V_{REFH} = V_{DDA}$
2. Typical values assume V_{DDA} = 3.0 V, Temp = 25 °C, f_{ADCK} = 2.0 MHz unless otherwise stated. Typical values are for reference only and are not tested in production.
3. The ADC supply current depends on the ADC conversion clock speed, conversion rate and ADC_CFG1[ADLPC] (low power). For lowest power operation, ADC_CFG1[ADLPC] must be set, the ADC_CFG2[ADHSC] bit must be clear with 1 MHz ADC conversion clock speed.

4. 1 LSB = $(V_{REFH} - V_{REFL})/2^N$
5. ADC conversion clock < 16 MHz, Max hardware averaging (AVGE = %1, AVGS = %11)
6. Input data is 100 Hz sine wave. ADC conversion clock < 12 MHz.
7. Input data is 1 kHz sine wave. ADC conversion clock < 12 MHz.
8. ADC conversion clock < 3 MHz

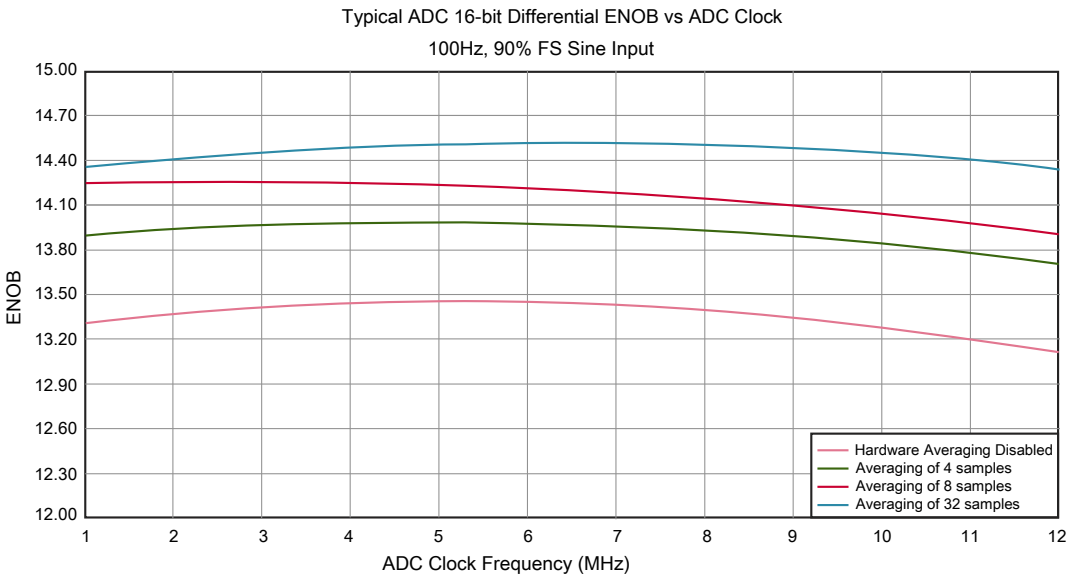

Figure 12. Typical ENOB vs. ADC_CLK for 16-bit differential mode

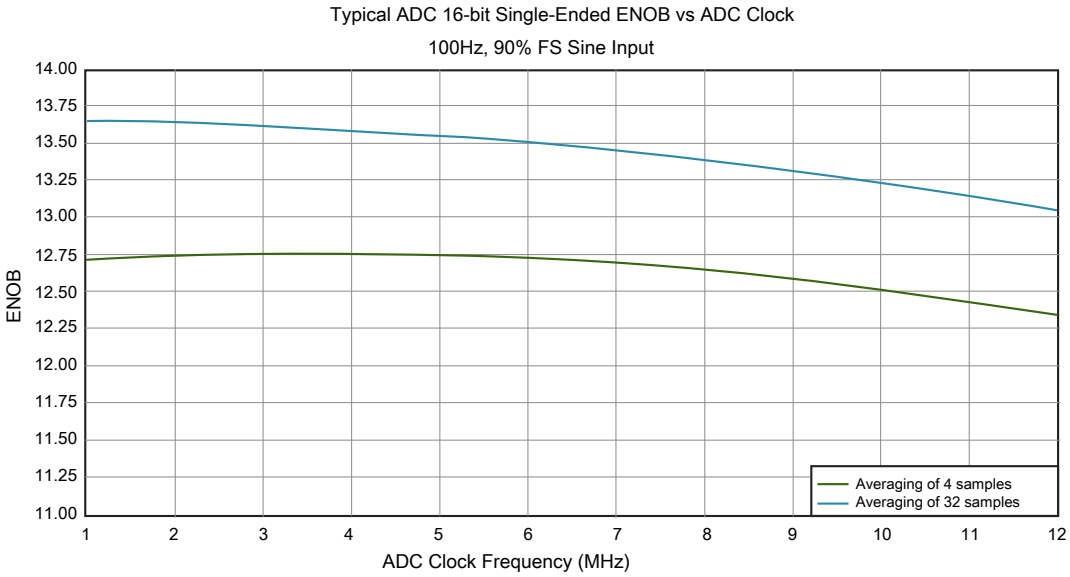

Figure 13. Typical ENOB vs. ADC_CLK for 16-bit single-ended mode

3.6.2 CMP and 6-bit DAC electrical specifications

Table 25. Comparator and 6-bit DAC electrical specifications

Symbol	Description	Min.	Typ.	Max.	Unit
V_{DD}	Supply voltage	1.71	—	3.6	V
I_{DDHS}	Supply current, High-speed mode (EN=1, PMODE=1)	—	—	200	μA
I_{DDLS}	Supply current, low-speed mode (EN=1, PMODE=0)	—	—	20	μA
V_{AIN}	Analog input voltage	V_{SS} – 0.3	—	V_{DD}	V
V_{AIO}	Analog input offset voltage	—	—	20	mV
V_H	Analog comparator hysteresis[1]				
	• CR0[HYSTCTR] = 00	—	5	—	mV
	• CR0[HYSTCTR] = 01	—	10	—	mV
	• CR0[HYSTCTR] = 10	—	20	—	mV
	• CR0[HYSTCTR] = 11	—	30	—	mV
V_{CMPOh}	Output high	V_{DD} – 0.5	—	—	V
V_{CMPOl}	Output low	—	—	0.5	V
t_{DHS}	Propagation delay, high-speed mode (EN=1, PMODE=1)	20	50	200	ns
t_{DLS}	Propagation delay, low-speed mode (EN=1, PMODE=0)	80	250	600	ns
	Analog comparator initialization delay[2]	—	—	40	μs
I_{DAC6b}	6-bit DAC current adder (enabled)	—	7	—	μA
INL	6-bit DAC integral non-linearity	–0.5	—	0.5	LSB[3]
DNL	6-bit DAC differential non-linearity	–0.3	—	0.3	LSB

1. Typical hysteresis is measured with input voltage range limited to 0.6 to V_{DD}–0.6 V.
2. Comparator initialization delay is defined as the time between software writes to change control inputs (Writes to CMP_DACCR[DACEN], CMP_DACCR[VRSEL], CMP_DACCR[VOSEL], CMP_MUXCR[PSEL], and CMP_MUXCR[MSEL]) and the comparator output settling to a stable level.
3. 1 LSB = $V_{reference}/64$

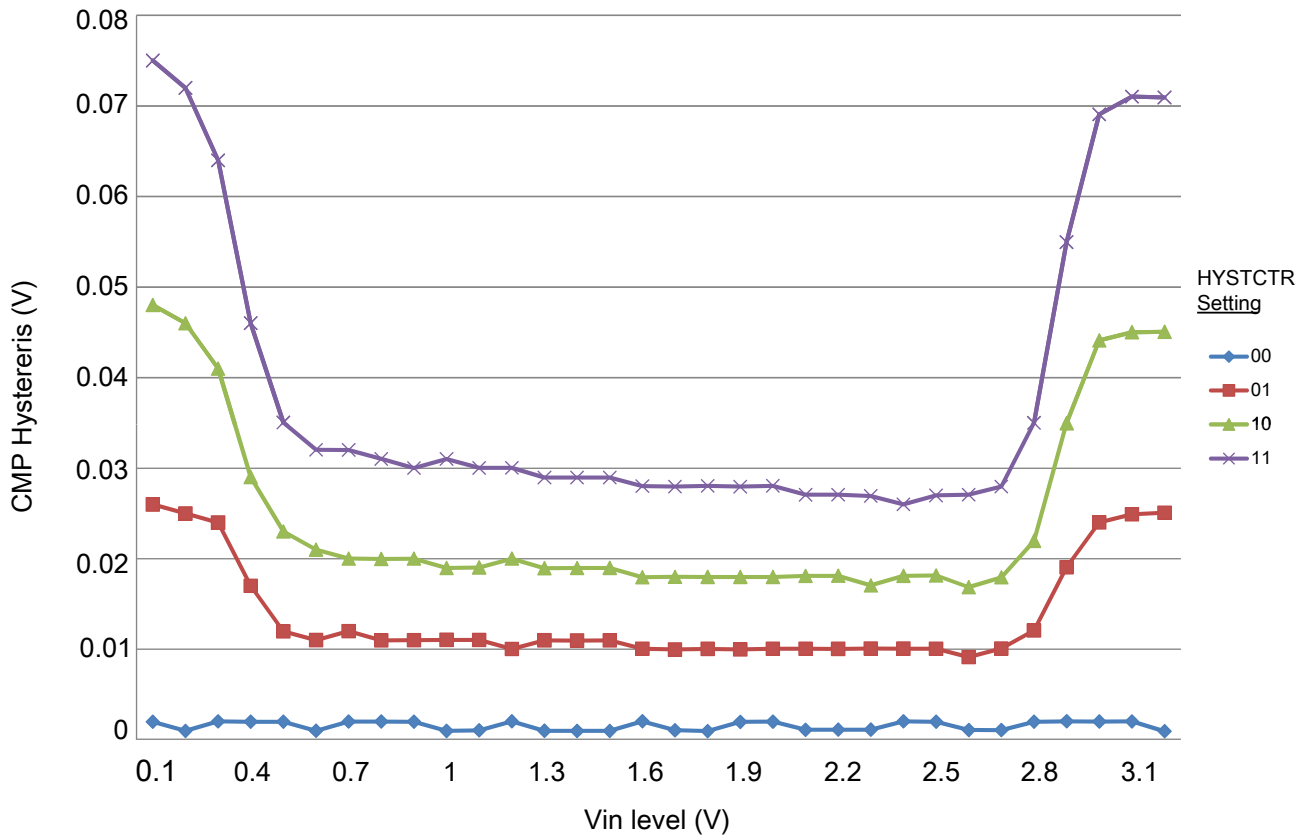

Figure 14. Typical hysteresis vs. Vin level (VDD = 3.3 V, PMODE = 0)

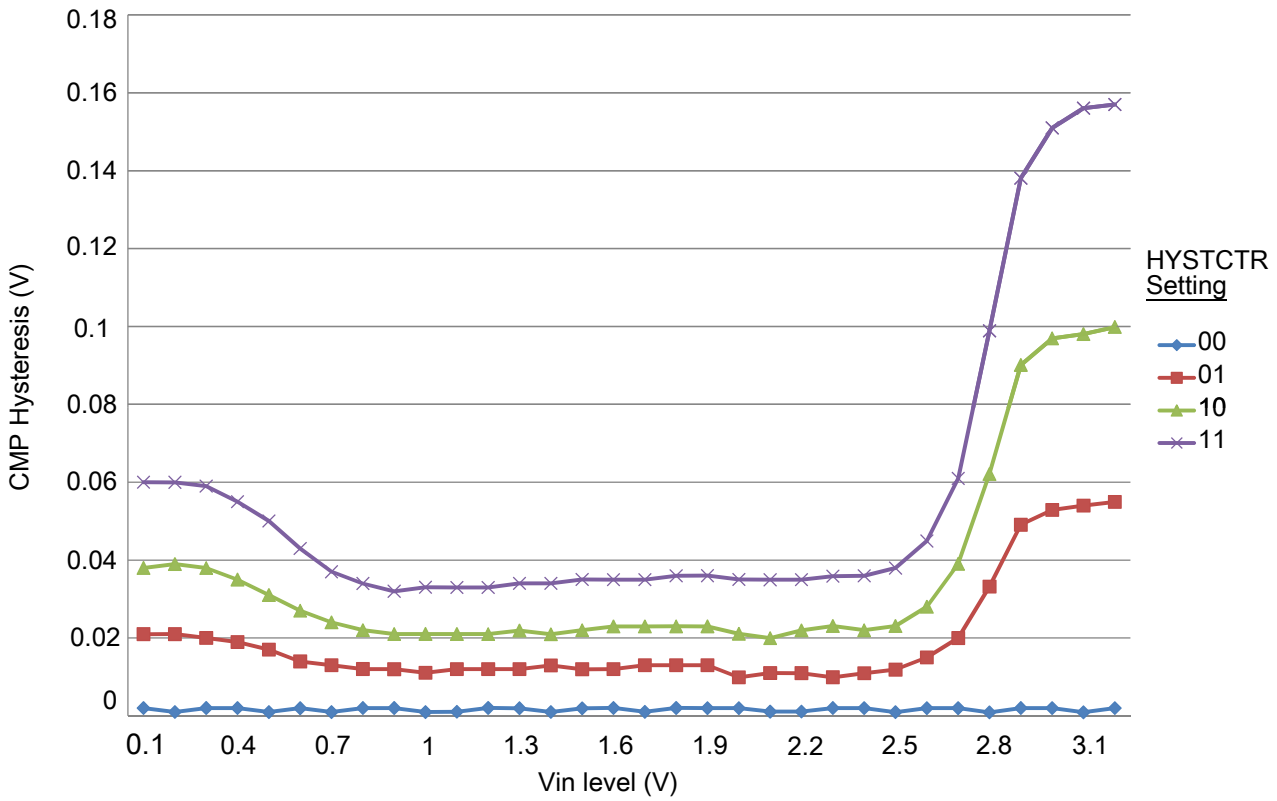

Figure 15. Typical hysteresis vs. Vin level (VDD = 3.3 V, PMODE = 1)

3.6.3 12-bit DAC electrical characteristics

3.6.3.1 12-bit DAC operating requirements

Table 26. 12-bit DAC operating requirements

Symbol	Desciption	Min.	Max.	Unit	Notes
V_{DDA}	Supply voltage	1.71	3.6	V	
V_{DACR}	Reference voltage	1.13	3.6	V	1
C_L	Output load capacitance	—	100	pF	2
I_L	Output load current	—	1	mA	

1. The DAC reference can be selected to be V_{DDA} or V_{REFH}.
2. A small load capacitance (47 pF) can improve the bandwidth performance of the DAC.

3.6.3.2 12-bit DAC operating behaviors

Table 27. 12-bit DAC operating behaviors

Symbol	Description	Min.	Typ.	Max.	Unit	Notes
I_{DDA_DACLP}	Supply current — low-power mode	—	—	330	μA	
I_{DDA_DACHP}	Supply current — high-speed mode	—	—	1200	μA	
t_{DACLP}	Full-scale settling time (0x080 to 0xF7F) — low-power mode	—	100	200	μs	1
t_{DACHP}	Full-scale settling time (0x080 to 0xF7F) — high-power mode	—	15	30	μs	1
$t_{CCDACLP}$	Code-to-code settling time (0xBF8 to 0xC08) — low-power mode and high-speed mode	—	0.7	1	μs	1
$V_{dacoutl}$	DAC output voltage range low — high-speed mode, no load, DAC set to 0x000	—	—	100	mV	
$V_{dacouth}$	DAC output voltage range high — high-speed mode, no load, DAC set to 0xFFF	V_{DACR} −100	—	V_{DACR}	mV	
INL	Integral non-linearity error — high speed mode	—	—	±8	LSB	2
DNL	Differential non-linearity error — V_{DACR} > 2 V	—	—	±1	LSB	3
DNL	Differential non-linearity error — V_{DACR} = VREF_OUT	—	—	±1	LSB	4
V_{OFFSET}	Offset error	—	±0.4	±0.8	%FSR	5
E_G	Gain error	—	±0.1	±0.6	%FSR	5
PSRR	Power supply rejection ratio, V_{DDA} ≥ 2.4 V	60	—	90	dB	
T_{CO}	Temperature coefficient offset voltage	—	3.7	—	μV/C	6
T_{GE}	Temperature coefficient gain error	—	0.000421	—	%FSR/C	
Rop	Output resistance (load = 3 kΩ)	—	—	250	Ω	
SR	Slew rate -80h→ F7Fh→ 80h • High power (SP_{HP}) • Low power (SP_{LP})	 1.2 0.05	 1.7 0.12	 — —	V/μs	
BW	3dB bandwidth • High power (SP_{HP}) • Low power (SP_{LP})	 550 40	 — —	 — —	kHz	

1. Settling within ±1 LSB
2. The INL is measured for 0 + 100 mV to V_{DACR} −100 mV
3. The DNL is measured for 0 + 100 mV to V_{DACR} −100 mV
4. The DNL is measured for 0 + 100 mV to V_{DACR} −100 mV with V_{DDA} > 2.4 V
5. Calculated by a best fit curve from V_{SS} + 100 mV to V_{DACR} − 100 mV
6. V_{DDA} = 3.0 V, reference select set for V_{DDA} (DACx_CO:DACRFS = 1), high power mode (DACx_C0:LPEN = 0), DAC set to 0x800, temperature range is across the full range of the device

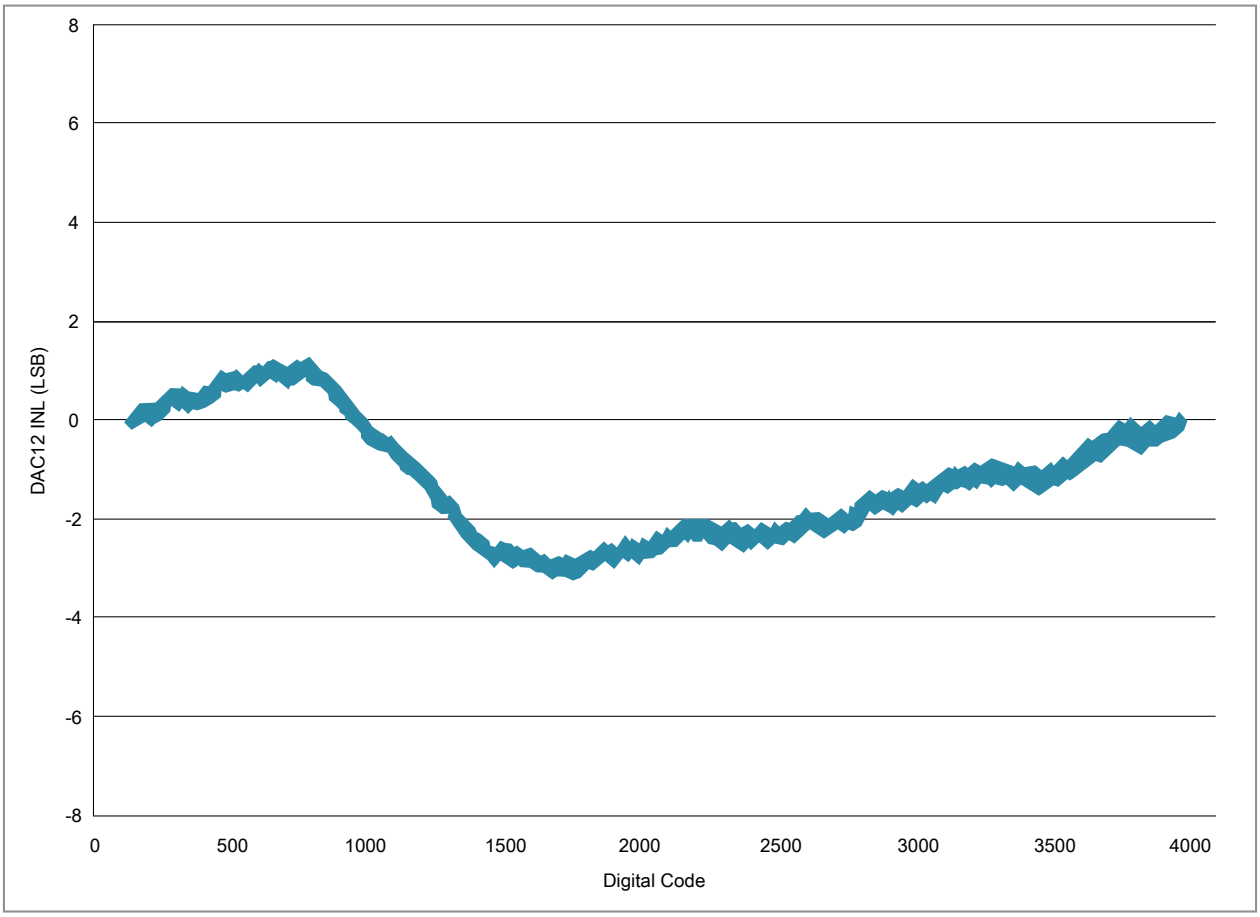

Figure 16. Typical INL error vs. digital code

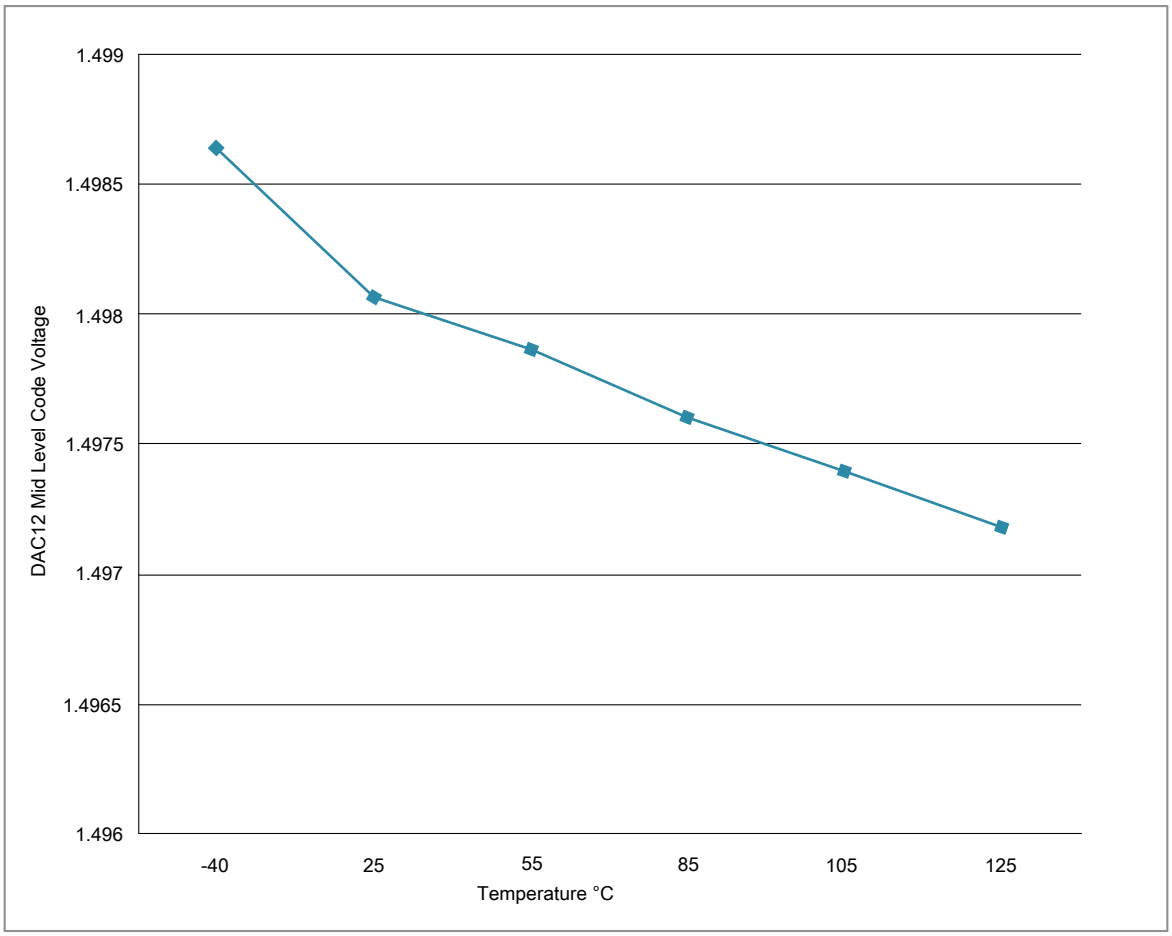

Figure 17. Offset at half scale vs. temperature

3.6.4 Voltage reference electrical specifications

Table 28. VREF full-range operating requirements

Symbol	Description	Min.	Max.	Unit	Notes
V_{DDA}	Supply voltage	1.71	3.6	V	
T_A	Temperature	Operating temperature range of the device		°C	
C_L	Output load capacitance	100		nF	1, 2

1. C_L must be connected to VREF_OUT if the VREF_OUT functionality is being used for either an internal or external reference.
2. The load capacitance should not exceed +/-25% of the nominal specified C_L value over the operating temperature range of the device.

Table 29. VREF full-range operating behaviors

Symbol	Description	Min.	Typ.	Max.	Unit	Notes
V_{out}	Voltage reference output with factory trim at nominal V_{DDA} and temperature=25°C	1.1920	1.1950	1.1980	V	1
V_{out}	Voltage reference output with user trim at nominal V_{DDA} and temperature=25°C	1.1945	1.1950	1.1955	V	1
V_{step}	Voltage reference trim step	—	0.5	—	mV	1
V_{tdrift}	Temperature drift (Vmax -Vmin across the full temperature range)	—	—	15	mV	1
I_{bg}	Bandgap only current	—	—	80	μA	
I_{lp}	Low-power buffer current	—	—	360	uA	1
I_{hp}	High-power buffer current	—	—	1	mA	1
ΔV_{LOAD}	Load regulation • current = ± 1.0 mA	— —	 200	 —	μV	1, 2
T_{stup}	Buffer startup time	—	—	100	μs	
$T_{chop_osc_stup}$	Internal bandgap start-up delay with chop oscillator enabled	—	—	35	ms	
V_{vdrift}	Voltage drift (Vmax -Vmin across the full voltage range)	—	2	—	mV	1

1. See the chip's Reference Manual for the appropriate settings of the VREF Status and Control register.
2. Load regulation voltage is the difference between the VREF_OUT voltage with no load vs. voltage with defined load

Table 30. VREF limited-range operating requirements

Symbol	Description	Min.	Max.	Unit	Notes
T_A	Temperature	0	70	°C	

Table 31. VREF limited-range operating behaviors

Symbol	Description	Min.	Max.	Unit	Notes
V_{tdrift}	Temperature drift (V_{max} -V_{min} across the limited temperature range)	—	10	mV	

3.7 Timers

See General switching specifications.

3.8 Communication interfaces

3.8.1 DSPI switching specifications (limited voltage range)

The Deserial Serial Peripheral Interface (DSPI) provides a synchronous serial bus with master and slave operations. Many of the transfer attributes are programmable. The tables below provide DSPI timing characteristics for classic SPI timing modes. Refer to the SPI chapter of the Reference Manual for information on the modified transfer formats used for communicating with slower peripheral devices.

Table 32. Master mode DSPI timing (limited voltage range)

Num	Description	Min.	Max.	Unit	Notes
	Operating voltage	2.7	3.6	V	
	Frequency of operation	—	25	MHz	
DS1	DSPI_SCK output cycle time	2 x t_{BUS}	—	ns	
DS2	DSPI_SCK output high/low time	(t_{SCK}/2) – 2	(t_{SCK}/2) + 2	ns	
DS3	DSPI_PCS*n* valid to DSPI_SCK delay	(t_{BUS} x 2) – 2	—	ns	1
DS4	DSPI_SCK to DSPI_PCS*n* invalid delay	(t_{BUS} x 2) – 2	—	ns	2
DS5	DSPI_SCK to DSPI_SOUT valid	—	8.5	ns	
DS6	DSPI_SCK to DSPI_SOUT invalid	-2	—	ns	
DS7	DSPI_SIN to DSPI_SCK input setup	16.2	—	ns	
DS8	DSPI_SCK to DSPI_SIN input hold	0	—	ns	

1. The delay is programmable in SPIx_CTARn[PSSCK] and SPIx_CTARn[CSSCK].
2. The delay is programmable in SPIx_CTARn[PASC] and SPIx_CTARn[ASC].

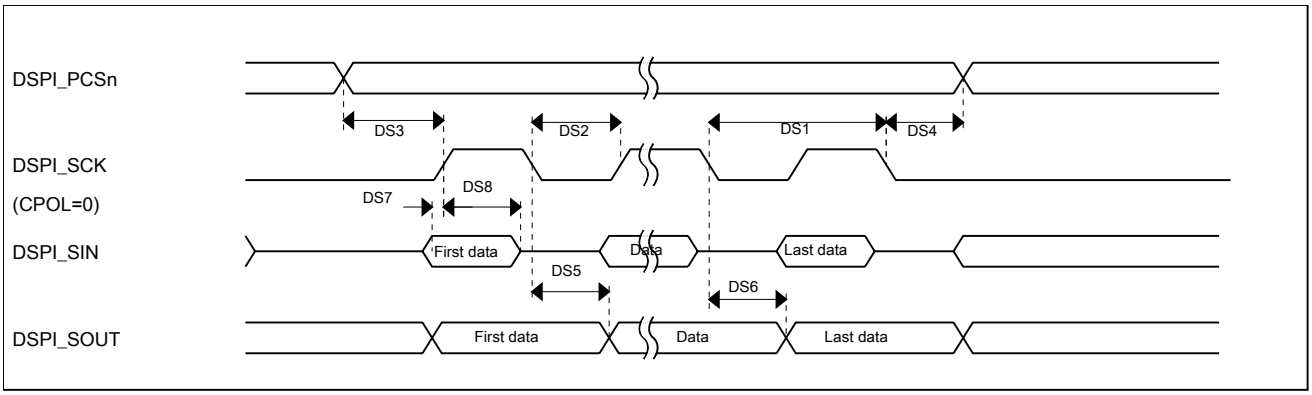

Figure 18. DSPI classic SPI timing — master mode

Table 33. Slave mode DSPI timing (limited voltage range)

Num	Description	Min.	Max.	Unit	Notes
	Operating voltage	2.7	3.6	V	
	Frequency of operation	—	12.5	MHz	1
DS9	DSPI_SCK input cycle time	4 x t_{BUS}	—	ns	
DS10	DSPI_SCK input high/low time	$(t_{SCK}/2) - 2$	$(t_{SCK}/2) + 2$	ns	
DS11	DSPI_SCK to DSPI_SOUT valid	—	21.4	ns	
DS12	DSPI_SCK to DSPI_SOUT invalid	0	—	ns	
DS13	DSPI_SIN to DSPI_SCK input setup	2.6	—	ns	
DS14	DSPI_SCK to DSPI_SIN input hold	7	—	ns	
DS15	$\overline{\text{DSPI_SS}}$ active to DSPI_SOUT driven	—	17	ns	
DS16	$\overline{\text{DSPI_SS}}$ inactive to DSPI_SOUT not driven	—	17	ns	

1. The maximum operating frequency is measured with noncontinuous CS and SCK. When DSPI is configured with continuous CS and SCK, the SPI clock must not be greater than 1/6 of the bus clock. For example, when the bus clock is 60 MHz, the SPI clock must not be greater than 10 MHz.

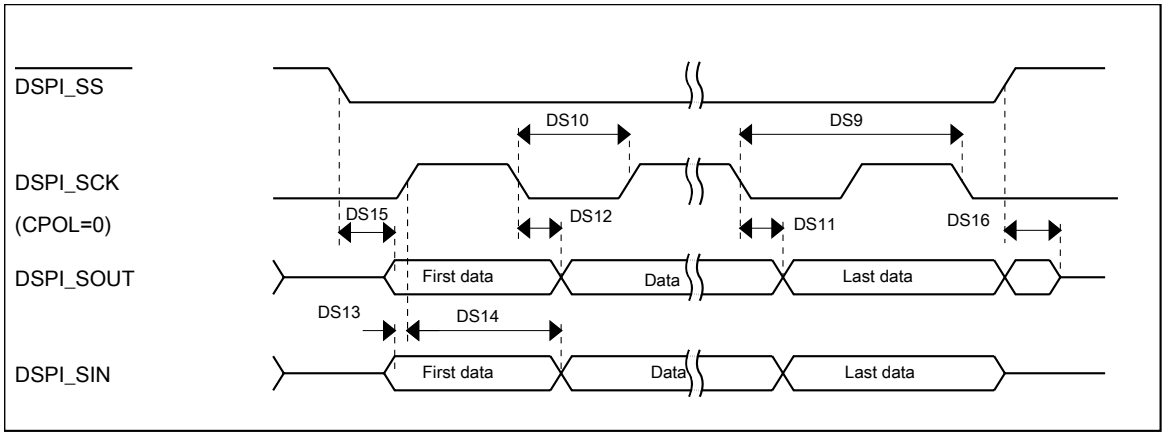

Figure 19. DSPI classic SPI timing — slave mode

3.8.2 DSPI switching specifications (full voltage range)

The Deserial Serial Peripheral Interface (DSPI) provides a synchronous serial bus with master and slave operations. Many of the transfer attributes are programmable. The tables below provides DSPI timing characteristics for classic SPI timing modes. Refer to the SPI chapter of the Reference Manual for information on the modified transfer formats used for communicating with slower peripheral devices.

Table 34. Master mode DSPI timing (full voltage range)

Num	Description	Min.	Max.	Unit	Notes
	Operating voltage	1.71	3.6	V	1
	Frequency of operation	—	12.5	MHz	
DS1	DSPI_SCK output cycle time	4 x t_{BUS}	—	ns	
DS2	DSPI_SCK output high/low time	(t_{SCK}/2) - 4	($t_{SCK/2)}$ + 4	ns	
DS3	DSPI_PCS*n* valid to DSPI_SCK delay	(t_{BUS} x 2) – 4	—	ns	2
DS4	DSPI_SCK to DSPI_PCS*n* invalid delay	(t_{BUS} x 2) – 4	—	ns	3
DS5	DSPI_SCK to DSPI_SOUT valid	—	10	ns	
DS6	DSPI_SCK to DSPI_SOUT invalid	-4.5	—	ns	
DS7	DSPI_SIN to DSPI_SCK input setup	24.6	—	ns	
DS8	DSPI_SCK to DSPI_SIN input hold	0	—	ns	

1. The DSPI module can operate across the entire operating voltage for the processor, but to run across the full voltage range the maximum frequency of operation is reduced.
2. The delay is programmable in SPIx_CTARn[PSSCK] and SPIx_CTARn[CSSCK].
3. The delay is programmable in SPIx_CTARn[PASC] and SPIx_CTARn[ASC].

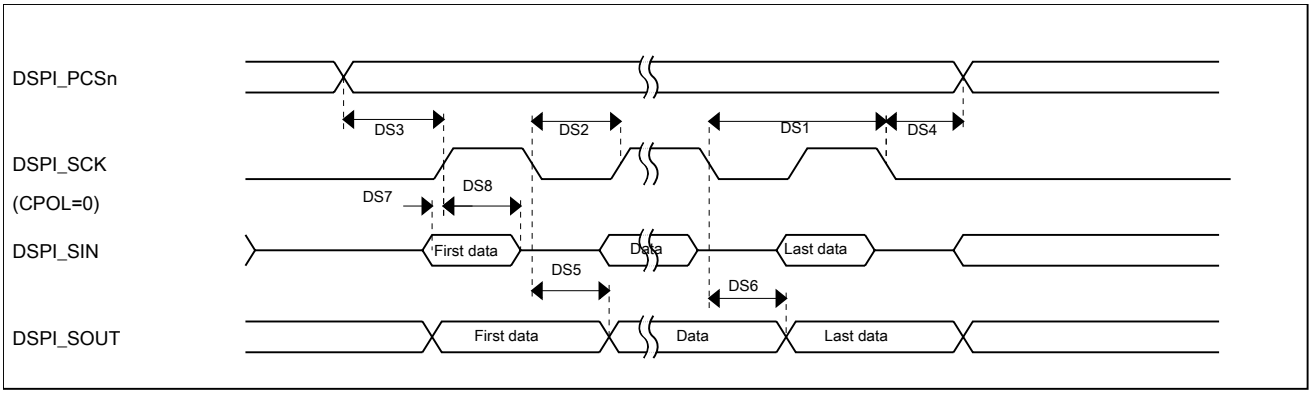

Figure 20. DSPI classic SPI timing — master mode

Table 35. Slave mode DSPI timing (full voltage range)

Num	Description	Min.	Max.	Unit
	Operating voltage	1.71	3.6	V
	Frequency of operation	—	6.25	MHz
DS9	DSPI_SCK input cycle time	8 x t_{BUS}	—	ns
DS10	DSPI_SCK input high/low time	(t_{SCK}/2) - 4	($t_{SCK/2)}$ + 4	ns
DS11	DSPI_SCK to DSPI_SOUT valid	—	29.5	ns
DS12	DSPI_SCK to DSPI_SOUT invalid	0	—	ns
DS13	DSPI_SIN to DSPI_SCK input setup	3.2	—	ns
DS14	DSPI_SCK to DSPI_SIN input hold	7	—	ns
DS15	$\overline{\text{DSPI_SS}}$ active to DSPI_SOUT driven	—	25	ns
DS16	$\overline{\text{DSPI_SS}}$ inactive to DSPI_SOUT not driven	—	25	ns

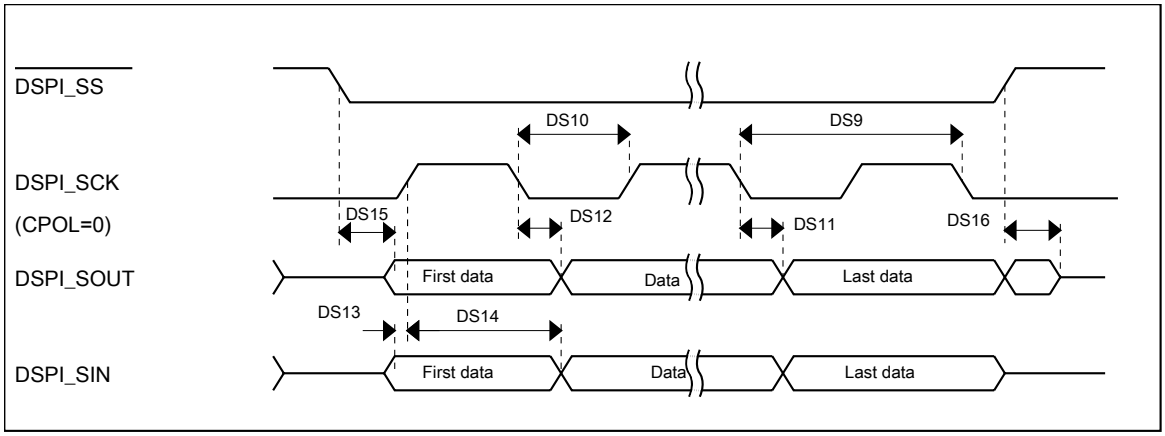

Figure 21. DSPI classic SPI timing — slave mode

3.8.3 Inter-Integrated Circuit Interface (I^2C) timing

Table 36. I^2C timing

Characteristic	Symbol	Standard Mode		Fast Mode		Unit
		Minimum	Maximum	Minimum	Maximum	
SCL Clock Frequency	f_{SCL}	0	100	0	400[1]	kHz
Hold time (repeated) START condition. After this period, the first clock pulse is generated.	t_{HD}; STA	4	—	0.6	—	μs
LOW period of the SCL clock	t_{LOW}	4.7	—	1.25	—	μs
HIGH period of the SCL clock	t_{HIGH}	4	—	0.6	—	μs
Set-up time for a repeated START condition	t_{SU}; STA	4.7	—	0.6	—	μs

Table continues on the next page...

Table 36. I²C timing (continued)

Characteristic	Symbol	Standard Mode		Fast Mode		Unit
		Minimum	Maximum	Minimum	Maximum	
Data hold time for I²C bus devices	t_{HD}; DAT	0[2]	3.45[3]	0[4]	0.9[2]	μs
Data set-up time	t_{SU}; DAT	250[5]	—	100[3, 6]	—	ns
Rise time of SDA and SCL signals	t_r	—	1000	20 +0.1C_b[7]	300	ns
Fall time of SDA and SCL signals	t_f	—	300	20 +0.1C_b[6]	300	ns
Set-up time for STOP condition	t_{SU}; STO	4	—	0.6	—	μs
Bus free time between STOP and START condition	t_{BUF}	4.7	—	1.3	—	μs
Pulse width of spikes that must be suppressed by the input filter	t_{SP}	N/A	N/A	0	50	ns

1. The maximum SCL Clock Frequency in Fast mode with maximum bus loading can only be achieved when using the High drive pins across the full voltage range and when using the Normal drive pins and VDD ≥ 2.7 V.
2. The master mode I²C deasserts ACK of an address byte simultaneously with the falling edge of SCL. If no slaves acknowledge this address byte, then a negative hold time can result, depending on the edge rates of the SDA and SCL lines.
3. The maximum tHD; DAT must be met only if the device does not stretch the LOW period (tLOW) of the SCL signal.
4. Input signal Slew = 10 ns and Output Load = 50 pF
5. Set-up time in slave-transmitter mode is 1 IPBus clock period, if the TX FIFO is empty.
6. A Fast mode I²C bus device can be used in a Standard mode I2C bus system, but the requirement $t_{SU;\ DAT}$ ≥ 250 ns must then be met. This is automatically the case if the device does not stretch the LOW period of the SCL signal. If such a device does stretch the LOW period of the SCL signal, then it must output the next data bit to the SDA line t_{rmax} + $t_{SU;\ DAT}$ = 1000 + 250 = 1250 ns (according to the Standard mode I²C bus specification) before the SCL line is released.
7. C_b = total capacitance of the one bus line in pF.

Table 37. I²C 1 Mbps timing

Characteristic	Symbol	Minimum	Maximum	Unit
SCL Clock Frequency	f_{SCL}	0	1[1]	MHz
Hold time (repeated) START condition. After this period, the first clock pulse is generated.	t_{HD}; STA	0.26	—	μs
LOW period of the SCL clock	t_{LOW}	0.5	—	μs
HIGH period of the SCL clock	t_{HIGH}	0.26	—	μs
Set-up time for a repeated START condition	t_{SU}; STA	0.26	—	μs
Data hold time for I_2C bus devices	t_{HD}; DAT	0	—	μs
Data set-up time	t_{SU}; DAT	50	—	ns
Rise time of SDA and SCL signals	t_r	20 +0.1C_b,[2]	120	ns
Fall time of SDA and SCL signals	t_f	20 +0.1C_b[2]	120	ns
Set-up time for STOP condition	t_{SU}; STO	0.26	—	μs
Bus free time between STOP and START condition	t_{BUF}	0.5	—	μs
Pulse width of spikes that must be suppressed by the input filter	t_{SP}	0	50	ns

1. The maximum SCL clock frequency of 1 Mbps can support maximum bus loading when using the High drive pins across the full voltage range.
2. C_b = total capacitance of the one bus line in pF.

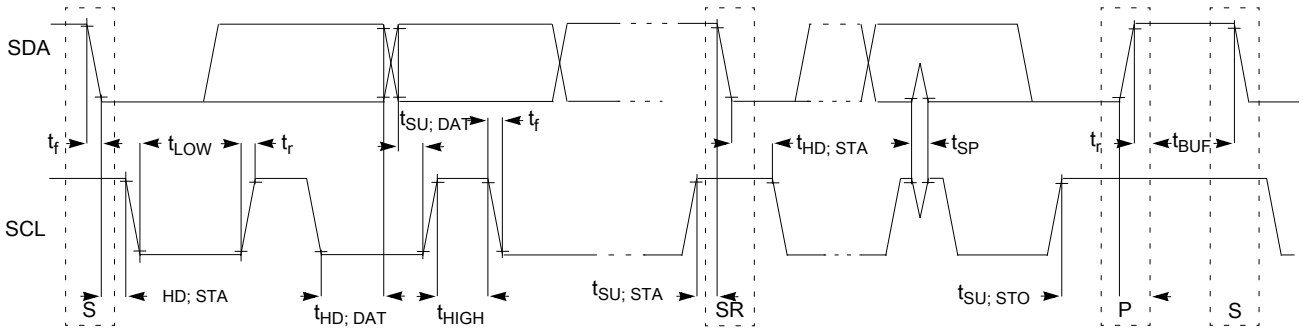

Figure 22. Timing definition for devices on the I²C bus

3.8.4 UART switching specifications

See General switching specifications.

4 Dimensions

4.1 Obtaining package dimensions

Package dimensions are provided in package drawings.

To find a package drawing, go to nxp.com and perform a keyword search for the drawing's document number:

If you want the drawing for this package	Then use this document number
32-pin QFN	98ARE10566D
48-pin LQFP	98ASH00962A
64-pin LQFP	98ASS23234W

5 Pinout

5.1 K02F Signal Multiplexing and Pin Assignments

The following table shows the signals available on each pin and the locations of these pins on the devices supported by this document. The Port Control Module is responsible for selecting which ALT functionality is available on each pin.

64 LQFP	48 LQFP	32 QFN	Pin Name	Default	ALT0	ALT1	ALT2	ALT3	ALT4	ALT5	ALT6	ALT7
1	—	—	PTE0/ CLKOUT32K	DISABLED		PTE0/ CLKOUT32K		UART1_TX				
2	—	—	PTE1/ LLWU_P0	DISABLED		PTE1/ LLWU_P0		UART1_RX				
3	1	1	VDD	VDD	VDD							
4	2	2	VSS	VSS	VSS							
5	3	3	PTE16	ADC0_SE4a/ ADC0_DP1	ADC0_SE4a/ ADC0_DP1	PTE16	SPI0_PCS0	UART1_TX	FTM_CLKIN0		FTM0_FLT3	
6	4	4	PTE17	ADC0_SE5a/ ADC0_DM1	ADC0_SE5a/ ADC0_DM1	PTE17	SPI0_SCK	UART1_RX	FTM_CLKIN1		LPTMR0_ ALT3	
7	5	5	PTE18	ADC0_SE6a/ ADC0_DP2	ADC0_SE6a/ ADC0_DP2	PTE18	SPI0_SOUT	UART1_CTS_ b	I2C0_SDA			
8	6	6	PTE19	ADC0_SE7a/ ADC0_DM2	ADC0_SE7a/ ADC0_DM2	PTE19	SPI0_SIN	UART1_RTS_ b	I2C0_SCL			
9	7	—	ADC0_DP0	ADC0_DP0	ADC0_DP0							
10	8	—	ADC0_DM0	ADC0_DM0	ADC0_DM0							
11	—	—	ADC0_DP3	ADC0_DP3	ADC0_DP3							
12	—	—	ADC0_DM3	ADC0_DM3	ADC0_DM3							
13	9	7	VDDA	VDDA	VDDA							
14	10	7	VREFH	VREFH	VREFH							
15	11	8	VREFL	VREFL	VREFL							
16	12	8	VSSA	VSSA	VSSA							
17	13	—	VREF_OUT/ CMP1_IN5/ CMP0_IN5	VREF_OUT/ CMP1_IN5/ CMP0_IN5	VREF_OUT/ CMP1_IN5/ CMP0_IN5							
18	14	9	DAC0_OUT/ CMP1_IN3/ ADC0_SE23	DAC0_OUT/ CMP1_IN3/ ADC0_SE23	DAC0_OUT/ CMP1_IN3/ ADC0_SE23							
19	—	—	CMP0_IN4	CMP0_IN4	CMP0_IN4							
20	15	10	PTE24	ADC0_SE17	ADC0_SE17	PTE24				I2C0_SCL	EWM_OUT_b	
21	16	11	PTE25	ADC0_SE18	ADC0_SE18	PTE25				I2C0_SDA	EWM_IN	
22	17	12	PTA0	JTAG_TCLK/ SWD_CLK		PTA0	UART0_CTS_ b	FTM0_CH5				JTAG_TCLK/ SWD_CLK
23	18	13	PTA1	JTAG_TDI		PTA1	UART0_RX					JTAG_TDI
24	19	14	PTA2	JTAG_TDO/ TRACE_SWO		PTA2	UART0_TX					JTAG_TDO/ TRACE_SWO
25	20	15	PTA3	JTAG_TMS/ SWD_DIO		PTA3	UART0_RTS_ b	FTM0_CH0				JTAG_TMS/ SWD_DIO
26	21	16	PTA4/ LLWU_P3	NMI_b		PTA4/ LLWU_P3		FTM0_CH1				NMI_b
27	—	—	PTA5	DISABLED		PTA5		FTM0_CH2				JTAG_TRST_ b
28	—	—	PTA12	DISABLED		PTA12		FTM1_CH0				FTM1_QD_ PHA

64 LQFP	48 LQFP	32 QFN	Pin Name	Default	ALT0	ALT1	ALT2	ALT3	ALT4	ALT5	ALT6	ALT7
29	—	—	PTA13/ LLWU_P4	DISABLED		PTA13/ LLWU_P4		FTM1_CH1				FTM1_QD_ PHB
30	22	—	VDD	VDD	VDD							
31	23	—	VSS	VSS	VSS							
32	24	17	PTA18	EXTAL0	EXTAL0	PTA18		FTM0_FLT2	FTM_CLKIN0			
33	25	18	PTA19	XTAL0	XTAL0	PTA19		FTM1_FLT0	FTM_CLKIN1		LPTMR0_ ALT1	
34	26	19	RESET_b	RESET_b	RESET_b							
35	27	20	PTB0/ LLWU_P5	ADC0_SE8	ADC0_SE8	PTB0/ LLWU_P5	I2C0_SCL	FTM1_CH0			FTM1_QD_ PHA	
36	28	21	PTB1	ADC0_SE9	ADC0_SE9	PTB1	I2C0_SDA	FTM1_CH1			FTM1_QD_ PHB	
37	29	—	PTB2	ADC0_SE12	ADC0_SE12	PTB2	I2C0_SCL	UART0_RTS_ b			FTM0_FLT3	
38	30	—	PTB3	ADC0_SE13	ADC0_SE13	PTB3	I2C0_SDA	UART0_CTS_ b			FTM0_FLT0	
39	31	—	PTB16	DISABLED		PTB16		UART0_RX	FTM_CLKIN0		EWM_IN	
40	32	—	PTB17	DISABLED		PTB17		UART0_TX	FTM_CLKIN1		EWM_OUT_b	
41	—	—	PTB18	DISABLED		PTB18		FTM2_CH0			FTM2_QD_ PHA	
42	—	—	PTB19	DISABLED		PTB19		FTM2_CH1			FTM2_QD_ PHB	
43	33	—	PTC0	ADC0_SE14	ADC0_SE14	PTC0	SPI0_PCS4	PDB0_ EXTRG				
44	34	22	PTC1/ LLWU_P6	ADC0_SE15	ADC0_SE15	PTC1/ LLWU_P6	SPI0_PCS3	UART1_RTS_ b	FTM0_CH0			
45	35	23	PTC2	ADC0_SE4b/ CMP1_IN0	ADC0_SE4b/ CMP1_IN0	PTC2	SPI0_PCS2	UART1_CTS_ b	FTM0_CH1			
46	36	24	PTC3/ LLWU_P7	CMP1_IN1	CMP1_IN1	PTC3/ LLWU_P7	SPI0_PCS1	UART1_RX	FTM0_CH2	CLKOUT		
47	—	—	VSS	VSS	VSS							
48	—	—	VDD	VDD	VDD							
49	37	25	PTC4/ LLWU_P8	DISABLED		PTC4/ LLWU_P8	SPI0_PCS0	UART1_TX	FTM0_CH3		CMP1_OUT	
50	38	26	PTC5/ LLWU_P9	DISABLED		PTC5/ LLWU_P9	SPI0_SCK	LPTMR0_ ALT2			CMP0_OUT	FTM0_CH2
51	39	27	PTC6/ LLWU_P10	CMP0_IN0	CMP0_IN0	PTC6/ LLWU_P10	SPI0_SOUT	PDB0_ EXTRG				
52	40	28	PTC7	CMP0_IN1	CMP0_IN1	PTC7	SPI0_SIN					
53	—	—	PTC8	CMP0_IN2	CMP0_IN2	PTC8						
54	—	—	PTC9	CMP0_IN3	CMP0_IN3	PTC9					FTM2_FLT0	
55	—	—	PTC10	DISABLED		PTC10						
56	—	—	PTC11/ LLWU_P11	DISABLED		PTC11/ LLWU_P11						

64 LQFP	48 LQFP	32 QFN	Pin Name	Default	ALT0	ALT1	ALT2	ALT3	ALT4	ALT5	ALT6	ALT7
57	41	—	PTD0/ LLWU_P12	DISABLED		PTD0/ LLWU_P12	SPI0_PCS0					
58	42	—	PTD1	ADC0_SE5b	ADC0_SE5b	PTD1	SPI0_SCK					
59	43	—	PTD2/ LLWU_P13	DISABLED		PTD2/ LLWU_P13	SPI0_SOUT					I2C0_SCL
60	44	—	PTD3	DISABLED		PTD3	SPI0_SIN					I2C0_SDA
61	45	29	PTD4/ LLWU_P14	DISABLED		PTD4/ LLWU_P14	SPI0_PCS1	UART0_RTS_ b	FTM0_CH4		EWM_IN	
62	46	30	PTD5	ADC0_SE6b	ADC0_SE6b	PTD5	SPI0_PCS2	UART0_CTS_ b	FTM0_CH5		EWM_OUT_b	
63	47	31	PTD6/ LLWU_P15	ADC0_SE7b	ADC0_SE7b	PTD6/ LLWU_P15	SPI0_PCS3	UART0_RX	FTM0_CH0		FTM0_FLT0	
64	48	32	PTD7	DISABLED		PTD7		UART0_TX	FTM0_CH1		FTM0_FLT1	

5.2 Recommended connection for unused analog and digital pins

The following table shows the recommended connections for analog interface pins if those analog interfaces are not used in the customer's application.

Table 38. Recommended connection for unused analog interfaces

Pin Type		Short recommendation	Detailed recommendation
Analog/non GPIO	PGAx/ADCx	Float	Analog input - Float
Analog/non GPIO	ADCx/CMPx	Float	Analog input - Float
Analog/non GPIO	VREF_OUT	Float	Analog output - Float
Analog/non GPIO	DACx_OUT	Float	Analog output - Float
Analog/non GPIO	RTC_WAKEUP_B	Float	Analog output - Float
Analog/non GPIO	XTAL32	Float	Analog output - Float
Analog/non GPIO	EXTAL32	Float	Analog input - Float
GPIO/Analog	PTA18/EXTAL0	Float	Analog input - Float
GPIO/Analog	PTA19/XTAL0	Float	Analog output - Float
GPIO/Analog	PTx/ADCx	Float	Float (default is analog input)
GPIO/Analog	PTx/CMPx	Float	Float (default is analog input)
GPIO/Digital	PTA0/JTAG_TCLK	Float	Float (default is JTAG with pulldown)
GPIO/Digital	PTA1/JTAG_TDI	Float	Float (default is JTAG with pullup)
GPIO/Digital	PTA2/JTAG_TDO	Float	Float (default is JTAG with pullup)
GPIO/Digital	PTA3/JTAG_TMS	Float	Float (default is JTAG with pullup)

Table continues on the next page...

Table 38. Recommended connection for unused analog interfaces (continued)

Pin Type		Short recommendation	Detailed recommendation
GPIO/Digital	PTA4/NMI_b	10kΩ pullup or disable and float	Pull high or disable in PCR & FOPT and float
GPIO/Digital	PTx	Float	Float (default is disabled)
VDDA	VDDA	Always connect to VDD potential	Always connect to VDD potential
VREFH	VREFH	Always connect to VDD potential	Always connect to VDD potential
VREFL	VREFL	Always connect to VSS potential	Always connect to VSS potential
VSSA	VSSA	Always connect to VSS potential	Always connect to VSS potential

5.3 K02F Pinouts

The below figure shows the pinout diagram for the devices supported by this document. Many signals may be multiplexed onto a single pin. To determine what signals can be used on which pin, see the previous section.

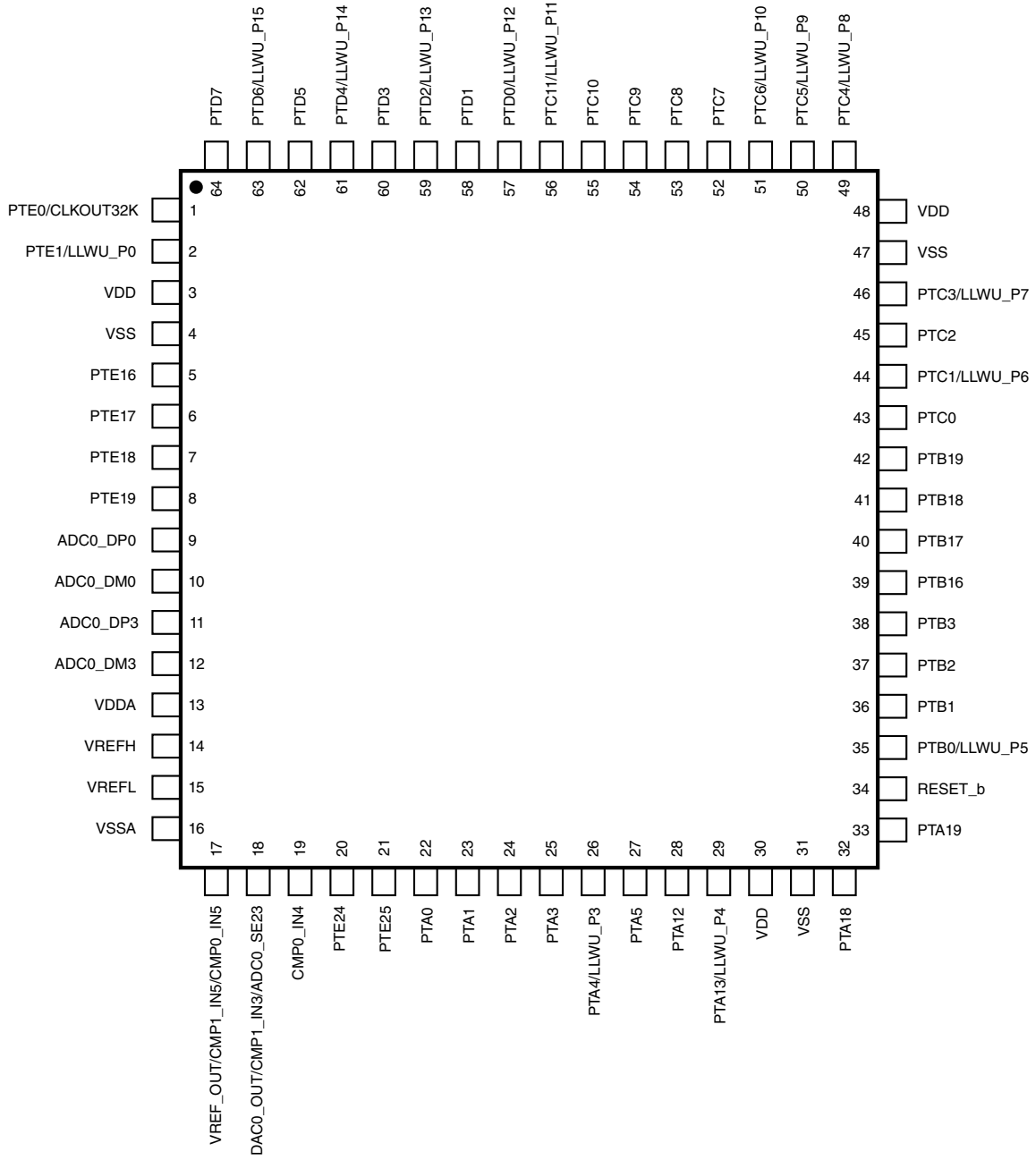

Figure 23. K02F 64 LQFP pinout diagram (top view)

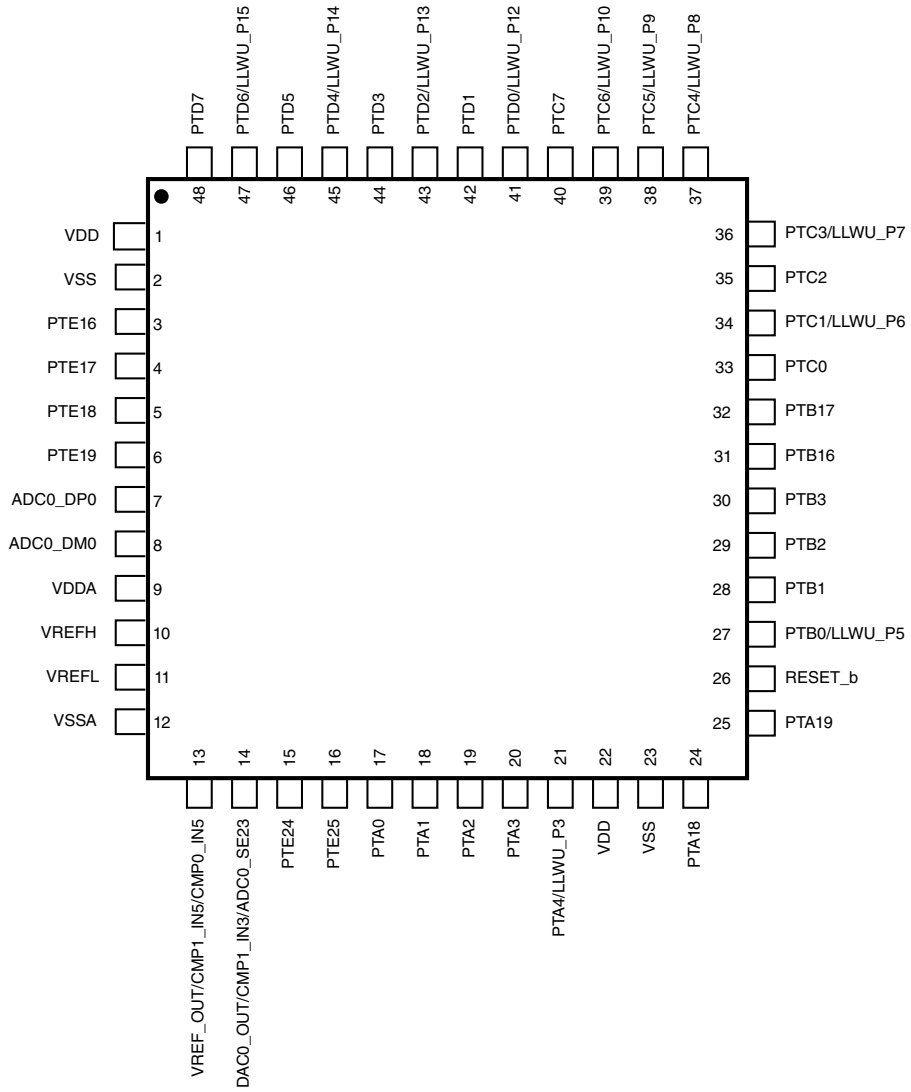

Figure 24. K02F 48 LQFP pinout diagram

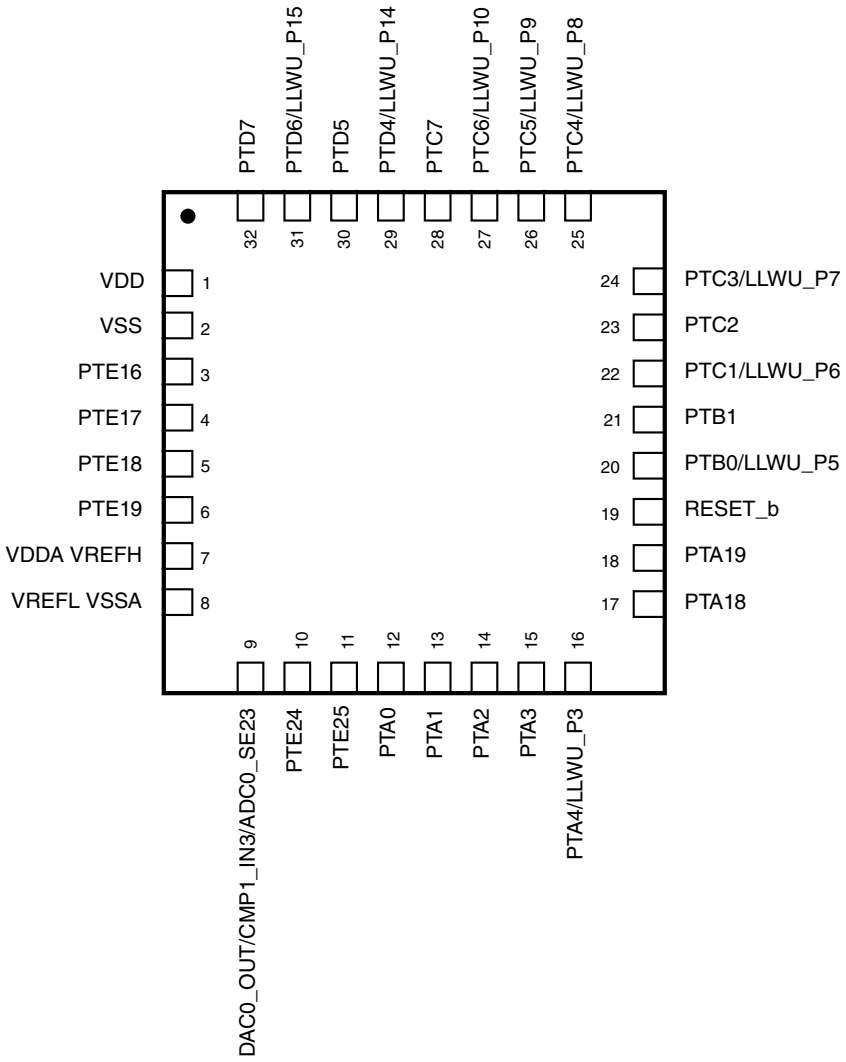

Figure 25. K02F 32 QFN pinout diagram

6 Part identification

6.1 Description

Part numbers for the chip have fields that identify the specific part. You can use the values of these fields to determine the specific part you have received.

6.2 Format

Part numbers for this device have the following format:

Q K## A M FFF R T PP CC N

6.3 Fields

This table lists the possible values for each field in the part number (not all combinations are valid):

Field	Description	Values
Q	Qualification status	• M = Fully qualified, general market flow, full reel • P = Prequalification • K = Fully qualified, general market flow, 100 piece reel
K##	Kinetis family	• K02
A	Key attribute	• D = Cortex-M4 w/ DSP • F = Cortex-M4 w/ DSP and FPU
M	Flash memory type	• N = Program flash only • X = Program flash and FlexMemory
FFF	Program flash memory size	• 64 = 64 KB • 128 = 128 KB • 256 = 256 KB • 512 = 512 KB
R	Silicon revision	• Z = Initial • (Blank) = Main • A = Revision after main
T	Temperature range (°C)	• V = –40 to 105 • C = –40 to 85
PP	Package identifier	• FM = 32 QFN (5 mm x 5 mm) • LF = 48 LQFP (7 mm x 7 mm) • LH = 64 LQFP (10 mm x 10 mm)
CC	Maximum CPU frequency (MHz)	• 5 = 50 MHz • 7 = 72 MHz • 10 = 100 MHz • 12 = 120 MHz • 15 = 150 MHz
N	Packaging type	• R = Tape and reel

6.4 Example

This is an example part number:

MK02FN128VLH10

6.5 48-pin LQFP part marking

The 48-pin LQFP package parts follow the part-marking scheme in the following table.

Table 39. 48-pin LQFP part marking

MK Partnumber	MK Part Marking
MK02FN128VLF10	M02J7V
MK02FN64VLF10	M02J6V

6.6 32-pin QFN part marking

The 32-pin QFN package parts follow the part-marking scheme in the following table.

Table 40. 32-pin QFN part marking

MK Part number	MK Part Marking
MK02FN128VFM10	M02J7V
MK02FN64VFM10	M02J6V

7 Terminology and guidelines

7.1 Definitions

Key terms are defined in the following table:

Term	Definition
Rating	A minimum or maximum value of a technical characteristic that, if exceeded, may cause permanent chip failure: • *Operating ratings* apply during operation of the chip. • *Handling ratings* apply when the chip is not powered. **NOTE:** The likelihood of permanent chip failure increases rapidly as soon as a characteristic begins to exceed one of its operating ratings.

Table continues on the next page...

Term	Definition
Operating requirement	A specified value or range of values for a technical characteristic that you must guarantee during operation to avoid incorrect operation and possibly decreasing the useful life of the chip
Operating behavior	A specified value or range of values for a technical characteristic that are guaranteed during operation if you meet the operating requirements and any other specified conditions
Typical value	A specified value for a technical characteristic that: • Lies within the range of values specified by the operating behavior • Is representative of that characteristic during operation when you meet the typical-value conditions or other specified conditions **NOTE:** Typical values are provided as design guidelines and are neither tested nor guaranteed.

7.2 Examples

Operating rating:

Symbol	Description	Min.	Max.	Unit
V_{DD}	1.0 V core supply voltage	–0.3	1.2	V

EXAMPLE

Operating requirement:

Symbol	Description	Min.	Max.	Unit
V_{DD}	1.0 V core supply voltage	0.9	1.1	V

EXAMPLE

Operating behavior that includes a *typical value*:

Symbol	Description	Min.	Typ.	Max.	Unit
I_{WP}	Digital I/O weak pullup/pulldown current	10	70	130	µA

EXAMPLE

7.3 Typical-value conditions

Typical values assume you meet the following conditions (or other conditions as specified):

Symbol	Description	Value	Unit
T_A	Ambient temperature	25	°C
V_{DD}	Supply voltage	3.3	V

7.4 Relationship between ratings and operating requirements

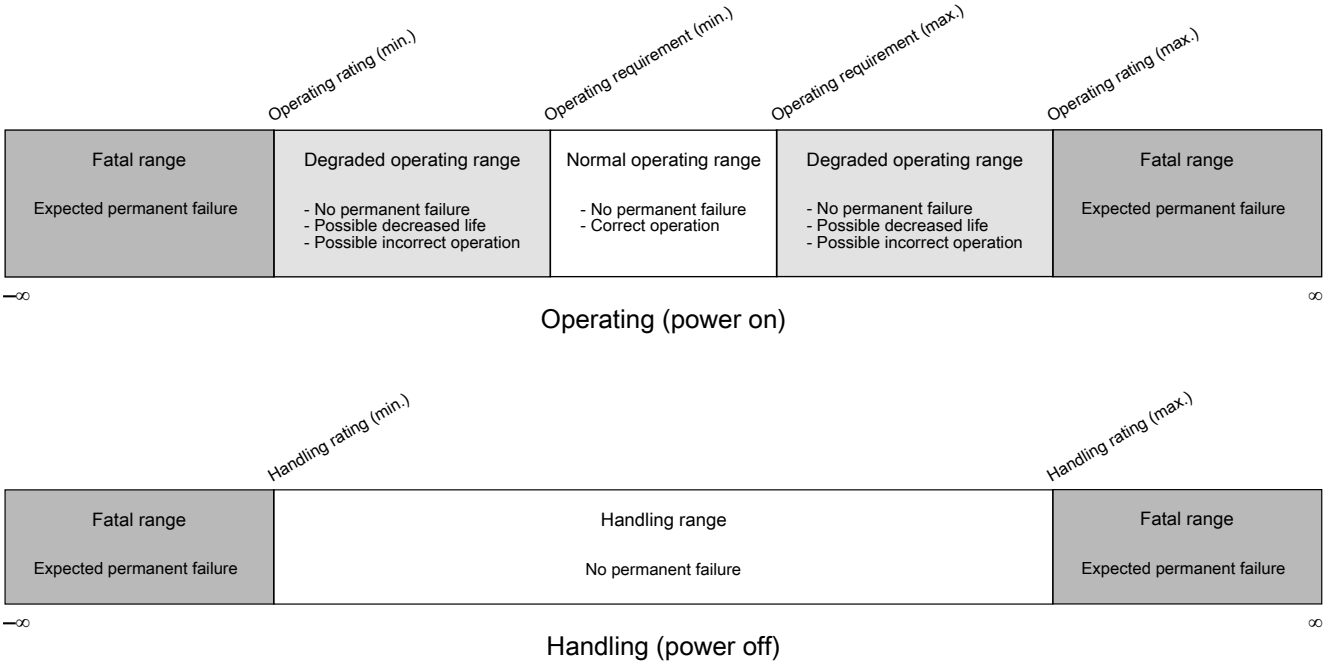

7.5 Guidelines for ratings and operating requirements

Follow these guidelines for ratings and operating requirements:

- Never exceed any of the chip's ratings.
- During normal operation, don't exceed any of the chip's operating requirements.
- If you must exceed an operating requirement at times other than during normal operation (for example, during power sequencing), limit the duration as much as possible.

8 Revision History

The following table provides a revision history for this document.

Table 41. Revision History

Rev. No.	Date	Substantial Changes
4	08/2016	• In "Power consumption operating behaviors" table, added "Low power mode peripheral adders—typical value" table • In "Thermal operating requirements" table, in footnote, corrected "$T_J = T_A + \Theta_{JA}$" to "$T_J = T_A + R_{\Theta JA}$" • In "Slave mode DSPI timing (limited voltage range)" table, added footnote regarding maximum frequency of operation • Added new section, "Recommended connections for unused analog and digital pins" • Updated "NVM program/erase timing specifications" table; updated values for $t_{hversall}$ (Erase All high-voltage time) • Added Terminology and Guidelines section • Updated Thermal Attributes value for 48LQFP • Added Device Revision Number table in front matter

3	4/2015	• Throughout: Modified notes related to 48-pin LQFP to say, "The 48-pin LQFP package for this product is not yet available; however, it is included in a Package Your Way program for Kinetis MCUs. Please visit www.Freescale.com/KPYW for more details."
		• On page 1:
		  • In first bullet of introduction, updated power consumption data to align with the data in the "Power consumption operating behaviors" table
		  • Under "Clocks," corrected second and third bullets—moved "with FLL" from "internal oscillators" to "multipurpose clock generator" bullet
		  • Under "Communication interfaces," updated I^2C bullet to indicate support for up to 1 Mbps operation
		  • Under "Operating characteristics," specified that voltage range includes flash writes
		• In "Voltage and current operating requirements" table:
		  • Removed content related to positive injection
		  • Updated footnote 1 to say that all analog and I/O pins are internally clamped to V_{SS} only (not V_{SS} and V_{DD})through ESD protection diodes.
		• In "Power mode transition operating behaviors" table, removed rows for LLS2 and LLS3
		• In "Power consumption operating behaviors" table:
		  • Provided additional temperature data
		  • Added Max IDD values based on characterization results equivalent to mean + 3 sigma
		  • Removed rows for LLS2 and LLS3
		• Updated "EMC radiated emissions operating behaviors" table
		• In "Thermal operating requirements" table, added the following footnote for ambient temperature: "Maximum T_A can be exceeded only if the user ensures that T_J does not exceed maximum T_J. The simplest method to determine T_J is: $T_J = T_A + \Theta_{JA}$ x chip power dissipation"
		• Updated "IRC48M Specifications":
		  • Updated maximum values for $\Delta_{firc48m_lv}$ and $\Delta_{firc48m_hv}$ (full temperature)
		  • Added specifications for $\Delta_{firc48m_hv}$ (-40°C to 85°C)
		• In "I^2C timing" table,
		  • Added the following footnote on maximum Fast mode value for SCL Clock Frequency: "The maximum SCL Clock Frequency in Fast mode with maximum bus loading can only be achieved when using the High drive pins across the full voltage range and when using the Normal drive pins and VDD ≥ 2.7 V."
		  • Updated minimum Fast mode value for LOW period of the SCL clock to 1.25 µ
		• Added "I^2C 1 Mbps timing" table

Table continues on the next page...

Table 41. Revision History (continued)

Rev. No.	Date	Substantial Changes
		• Removed Section 6, "Ordering parts." • Added "48-pin LQFP part marking" section • Added "32-pin QFN part marking" section

2	8/2014	• On p. 1, under "Memories and memory interfaces," added bullet, "Preprogrammed Kinetis flashloader for one-time, in-system factory programming"
		• On p. 1, added parenthetical element to the following bullet under "Analog modules":*Accurate internal voltage reference (not available for 32-pin QFN package)*
		• On p. 1, added parenthetical element to the following bullet under "Timers":*Two 2-channel motor-control general-purpose timers with quadrature decoder functionality (FTM2 does not have external pins on the 32-pin QFN or the 48-pin LQFP package)*
		• In "Voltage and current operating ratings" section, updated digital supply current maximum value
		• In "Voltage and current operating behaviors" section, updated input leakage information
		• In "Power consumption operating behaviors table":
		  • Updated existing typical and maximum power measurements
		  • Added new typical power measurements for the following:
		  • IDD_HSRUN (High Speed Run mode, all peripheral clocks disabled, current executing CoreMark code)
		  • IDD_HSRUN (High Speed Run mode, all peripheral clocks disabled, current executing while(1) loop)
		  • IDD_RUN (Run mode current in Compute operation, all peripheral clocks disabled, executing CoreMark code)
		  • IDD_RUN (Run mode current in Compute operation, all peripheral clocks disabled, executing while(1) loop)
		  • IDD_VLPR (Very Low Power mode current in Compute operation, all peripheral clocks disabled, executing CoreMark code)
		  • IDD_VLPR (Very Low Power Run mode current in Compute operation, all peripheral clocks disabled, executing while(1) loop)
		• Updated section, "EMC radiated emissions operating behaviors for 64 LQFP package"
		• In "Thermal attributes" section, added 64-pin LQFP and 32-pin QFN package values
		• Updated "MCG specifications" table
		• Updated "VREF full-range operating behaviors" table
		• In the "Part identification" section, added "Format" and "Fields" subsections

1	3/2014	Initial public release

How to Reach Us:

Home Page:
nxp.com

Web Support:
nxp.com/support

Information in this document is provided solely to enable system and software implementers to use NXP products. There are no express or implied copyright licenses granted hereunder to design or fabricate any integrated circuits based on the information in this document. NXP reserves the right to make changes without further notice to any products herein.

NXP makes no warranty, representation, or guarantee regarding the suitability of its products for any particular purpose, nor does NXP assume any liability arising out of the application or use of any product or circuit, and specifically disclaims any and all liability, including without limitation consequential or incidental damages. “Typical” parameters that may be provided in NXP data sheets and/or specifications can and do vary in different applications, and actual performance may vary over time. All operating parameters, including “typicals,” must be validated for each customer application by customer's technical experts. NXP does not convey any license under its patent rights nor the rights of others. NXP sells products pursuant to standard terms and conditions of sale, which can be found at the following address:nxp.com/SalesTermsandConditions.

NXP, the NXP logo, NXP SECURE CONNECTIONS FOR A SMARTER WORLD, Freescale, the Freescale logo, and Kinetis are trademarks of NXP B.V. All other product or service names are the property of their respective owners. ARM, the ARM Powered logo, and Cortex are registered trademarks of ARM Limited (or its subsidiaries) in the EU and/or elsewhere. All rights reserved.

© 2014–2016 NXP B.V.

Document Number K02P64M100SFA
Revision 4, 08/2016