BAS16 series

High-speed switching diodes

Rev. 6 — 24 September 2014 Product data sheet

1. Product profile

1.1 General description

High-speed switching diodes, encapsulated in small Surface-Mounted Device (SMD) plastic packages.

Table 1. Product overview

Type number	Package			Configuration	Package configuration
	Nexperia	JEITA	JEDEC		
BAS16	SOT23	-	TO-236AB	single	small
BAS16H	SOD123F	-	-	single	small and flat lead
BAS16J	SOD323F	SC-90	-	single	very small and flat lead
BAS16L	SOD882	-	-	single	leadless ultra small
BAS16T	SOT416	SC-75	-	single	ultra small
BAS16VV	SOT666	-	-	triple isolated	ultra small and flat lead
BAS16VY	SOT363	SC-88	-	triple isolated	very small
BAS16W	SOT323	SC-70	-	single	very small
BAS316	SOD323	SC-76	-	single	very small
BAS516	SOD523	SC-79	-	single	ultra small and flat lead

1.2 Features and benefits

- High switching speed: $t_{rr} \leq 4$ ns
- Low leakage current
- Repetitive peak reverse voltage: $V_{RRM} \leq 100$ V
- AEC-Q101 qualified
- Low capacitance
- Reverse voltage: $V_R \leq 100$ V
- Small SMD plastic packages

1.3 Applications

- High-speed switching
- General-purpose switching

1.4 Quick reference data

Table 2. Quick reference data

T_{amb} = 25 °C unless otherwise specified.

Symbol	Parameter	Conditions		Min	Typ	Max	Unit
Per diode							
V_R	reverse voltage			-	-	100	V
I_R	reverse current	V_R = 80 V		-	-	0.5	μA
t_{rr}	reverse recovery time	I_F = 10 mA; I_R = 10 mA; R_L = 100 Ω; $I_{R(meas)}$ = 1 mA		-	-	4	ns

2. Pinning information

Table 3. Pinning

Pin	Description		Simplified outline	Graphic symbol
BAS16; BAS16T; BAS16W				
1	anode		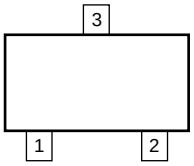 006aaa144	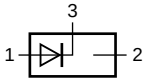 006aaa764
2	not connected			
3	cathode			
BAS16H; BAS16J; BAS316; BAS516				
1	cathode	[1]	001aab540	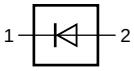 006aab040
2	anode			
BAS16L				
1	cathode	[1]	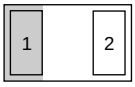 Transparent top view	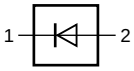 006aab040
2	anode			
BAS16VV; BAS16VY				
1	anode (diode 1)		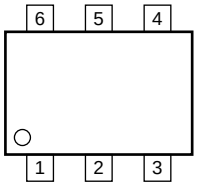 001aab555	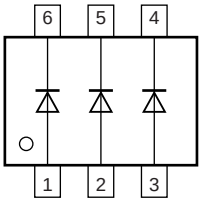 006aab106
2	anode (diode 2)			
3	anode (diode 3)			
4	cathode (diode 3)			
5	cathode (diode 2)			
6	cathode (diode 1)			

[1] The marking bar indicates the cathode.

All information provided in this document is subject to legal disclaimers.

© Nexperia B.V. 2017. All rights reserved

3. Ordering information

Table 4. Ordering information

Type number	Package		
	Name	Description	Version
BAS16	TO-236AB	plastic surface-mounted package; 3 leads	SOT23
BAS16H	-	plastic surface-mounted package; 2 leads	SOD123F
BAS16J	SC-90	plastic surface-mounted package; 2 leads	SOD323F
BAS16L	DFN1006-2	leadless ultra small plastic package; 2 terminals; body 1.0 × 0.6 × 0.5 mm	SOD882
BAS16T	SC-75	plastic surface-mounted package; 3 leads	SOT416
BAS16VV	-	plastic surface-mounted package; 6 leads	SOT666
BAS16VY	SC-88	plastic surface-mounted package; 6 leads	SOT363
BAS16W	SC-70	plastic surface-mounted package; 3 leads	SOT323
BAS316	SC-76	plastic surface-mounted package; 2 leads	SOD323
BAS516	SC-79	plastic surface-mounted package; 2 leads	SOD523

4. Marking

Table 5. Marking codes

Type number	Marking code[1]
BAS16	A6*
BAS16H	A1
BAS16J	AR
BAS16L	S2
BAS16T	A6
BAS16VV	53
BAS16VY	16*
BAS16W	A6*
BAS316	A6
BAS516	6

[1] * = placeholder for manufacturing site code

5. Limiting values

Table 6. Limiting values

In accordance with the Absolute Maximum Rating System (IEC 60134).

Symbol	Parameter	Conditions		Min	Max	Unit
Per diode						
V_{RRM}	repetitive peak reverse voltage			-	100	V
V_R	reverse voltage			-	100	V

All information provided in this document is subject to legal disclaimers.

© Nexperia B.V. 2017. All rights reserved

Table 6. Limiting values *...continued*

In accordance with the Absolute Maximum Rating System (IEC 60134).

Symbol	Parameter	Conditions		Min	Max	Unit
I_F	forward current					
	BAS16		[1]	-	215	mA
	BAS16H BAS16L		[2]	-	215	mA
	BAS16T		[1]	-	155	mA
	BAS16VV BAS16VY		[1][3]	-	200	mA
	BAS16W		[1]	-	175	mA
	BAS16J BAS316 BAS516		[1]	-	250	mA
I_{FRM}	repetitive peak forward current	$t_p \leq 0.5$ ms; $\delta \leq 0.25$		-	500	mA
I_{FSM}	non-repetitive peak forward current	square wave; $T_{j(init)} = 25$ °C				
		$t_p = 1$ µs		-	4	A
		$t_p = 1$ ms		-	1	A
		$t_p = 1$ s		-	0.5	A
P_{tot}	total power dissipation					
	BAS16	$T_{amb} \leq 25$ °C	[1]	-	250	mW
	BAS16H	$T_{amb} \leq 25$ °C	[2]	-	380	mW
			[5]	-	830	mW
	BAS16J	$T_{amb} \leq 25$ °C	[5]	-	550	mW
	BAS16L	$T_{amb} \leq 25$ °C	[2]	-	250	mW
	BAS16T	$T_{sp} \leq 90$ °C	[1][4]	-	170	mW
	BAS16VV	$T_{amb} \leq 25$ °C	[1][3]	-	180	mW
	BAS16VY	$T_{sp} \leq 85$ °C	[1][3][6]	-	250	mW
	BAS16W	$T_{amb} \leq 25$ °C	[1]	-	200	mW
	BAS316	$T_{sp} \leq 90$ °C	[1][4]	-	400	mW
	BAS516	$T_{sp} \leq 90$ °C	[1][4]	-	500	mW
Per device						
T_j	junction temperature			-	150	°C
T_{amb}	ambient temperature			−65	+150	°C
T_{stg}	storage temperature			−65	+150	°C

[1] Device mounted on an FR4 Printed-Circuit Board (PCB), single-sided copper, tin-plated and standard footprint.

[2] Device mounted on an FR4 PCB with 60 µm copper strip line.

[3] Single diode loaded.

[4] Soldering point of cathode tab.

[5] Device mounted on an FR4 PCB, single-sided copper, tin-plated, mounting pad for cathode 1 cm^2.

[6] Soldering points at pins 4, 5 and 6.

All information provided in this document is subject to legal disclaimers.

© Nexperia B.V. 2017. All rights reserved

6. Thermal characteristics

Table 7. Thermal characteristics

Symbol	Parameter	Conditions		Min	Typ	Max	Unit
$R_{th(j-a)}$	thermal resistance from junction to ambient	in free air					
	BAS16		[1]	-	-	500	K/W
	BAS16H		[2]	-	-	330	K/W
			[3]	-	-	150	K/W
	BAS16J		[3]	-	-	230	K/W
	BAS16L		[2]	-	-	500	K/W
	BAS16VV		[2][4]	-	-	700	K/W
			[3][4]	-	-	410	K/W
	BAS16W		[1]	-	-	625	K/W
$R_{th(j-sp)}$	thermal resistance from junction to solder point						
	BAS16			-	-	330	K/W
	BAS16H		[5]	-	-	70	K/W
	BAS16J		[5]	-	-	55	K/W
	BAS16T			-	-	350	K/W
	BAS16VY		[4][6]	-	-	260	K/W
	BAS16W			-	-	300	K/W
	BAS316		[5]	-	-	150	K/W
	BAS516		[5]	-	-	120	K/W

[1] Device mounted on an FR4 PCB, single-sided copper, tin-plated and standard footprint.

[2] Device mounted on an FR4 PCB with 60 μm copper strip line.

[3] Device mounted on an FR4 PCB, single-sided copper, tin-plated, mounting pad for cathode 1 cm^2.

[4] Single diode loaded.

[5] Soldering point of cathode tab.

[6] Soldering points at pins 4, 5 and 6.

All information provided in this document is subject to legal disclaimers.

© Nexperia B.V. 2017. All rights reserved

7. Characteristics

Table 8. Characteristics

T_{amb} = 25 °C unless otherwise specified.

Symbol	Parameter	Conditions		Min	Typ	Max	Unit
Per diode							
V_F	forward voltage		[1]				
		I_F = 1 mA		-	-	715	mV
		I_F = 10 mA		-	-	855	mV
		I_F = 50 mA		-	-	1	V
		I_F = 150 mA		-	-	1.25	V
I_R	reverse current	V_R = 25 V		-	-	30	nA
		V_R = 80 V		-	-	0.5	μA
		V_R = 25 V; T_j = 150 °C		-	-	30	μA
		V_R = 80 V; T_j = 150 °C		-	-	50	μA
C_d	diode capacitance	f = 1 MHz; V_R = 0 V					
	BAS16; BAS16H; BAS16J; BAS16L; BAS16T; BAS16VV; BAS16VY; BAS16W; BAS316			-	-	1.5	pF
	BAS516			-	-	1	pF
t_{rr}	reverse recovery time	I_F = 10 mA; I_R = 10 mA; R_L = 100 Ω; $I_{R(meas)}$ = 1 mA		-	-	4	ns
V_{FR}	forward recovery voltage	I_F = 10 mA; t_r = 20 ns		-	-	1.75	V

[1] Pulse test: $t_p \leq 300$ μs; $\delta \leq 0.02$.

All information provided in this document is subject to legal disclaimers.

© Nexperia B.V. 2017. All rights reserved

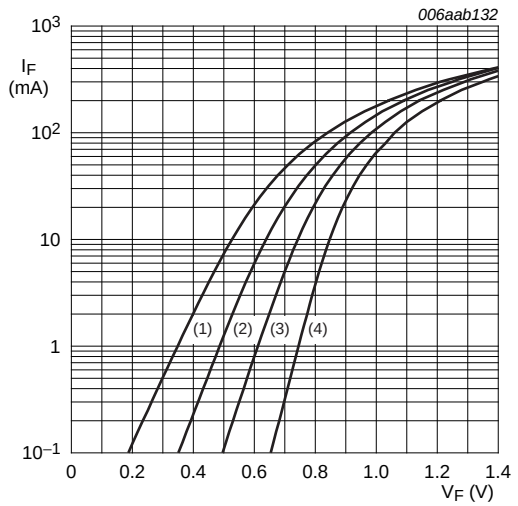

(1) T_{amb} = 150 °C

(2) T_{amb} = 85 °C

(3) T_{amb} = 25 °C

(4) T_{amb} = −40 °C

Fig 1. Forward current as a function of forward voltage; typical values

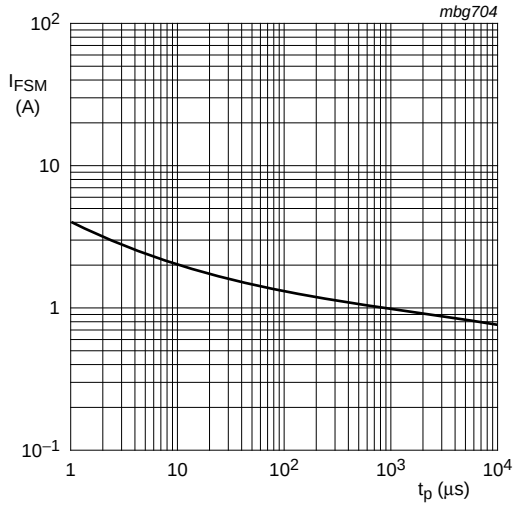

Based on square wave currents.

$T_{j(init)}$ = 25 °C

Fig 2. Non-repetitive peak forward current as a function of pulse duration; maximum values

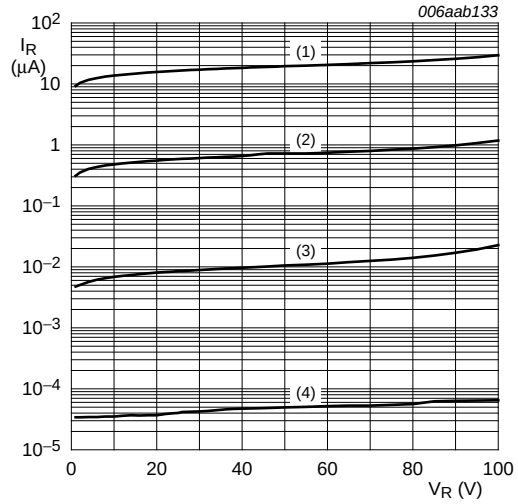

(1) T_{amb} = 150 °C

(2) T_{amb} = 85 °C

(3) T_{amb} = 25 °C

(4) T_{amb} = −40 °C

Fig 3. Reverse current as a function of reverse voltage; typical values

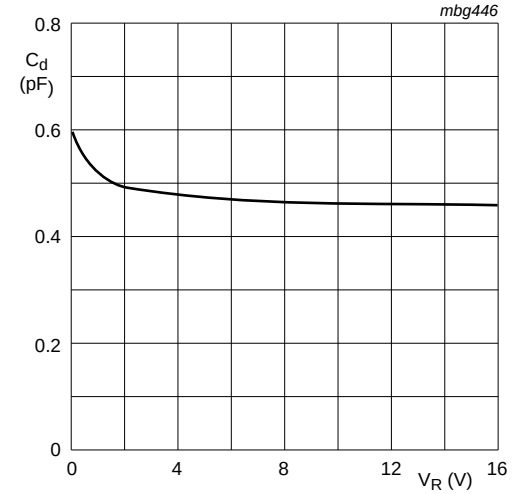

f = 1 MHz; T_{amb} = 25 °C

Fig 4. Diode capacitance as a function of reverse voltage; typical values

All information provided in this document is subject to legal disclaimers.

© Nexperia B.V. 2017. All rights reserved

8. Test information

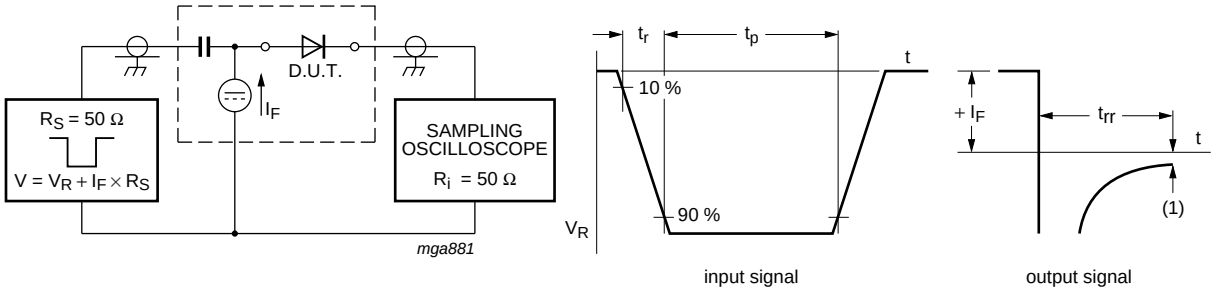

(1) $I_R = 1$ mA

Input signal: reverse pulse rise time $t_r = 0.6$ ns; reverse voltage pulse duration $t_p = 100$ ns; duty cycle $\delta = 0.05$

Oscilloscope: rise time $t_r = 0.35$ ns

Fig 5. Reverse recovery time test circuit and waveforms

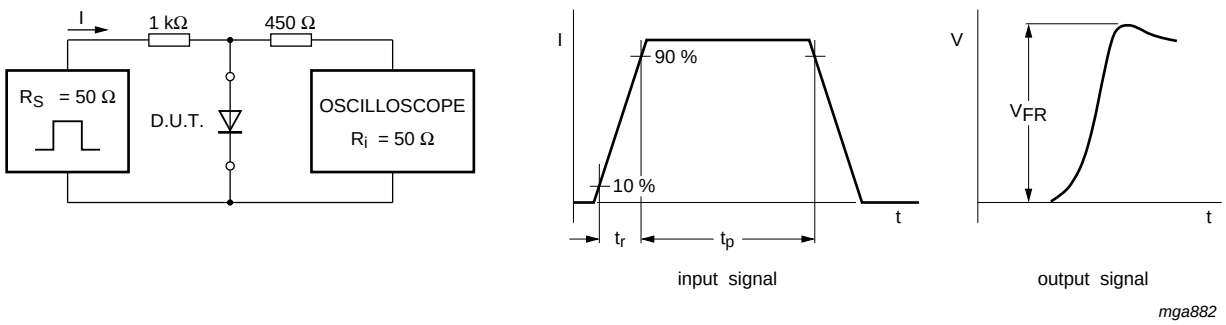

Input signal: forward pulse rise time $t_r = 20$ ns; forward current pulse duration $t_p \geq 100$ ns; duty cycle $\delta \leq 0.005$

Fig 6. Forward recovery voltage test circuit and waveforms

8.1 Quality information

This product has been qualified in accordance with the Automotive Electronics Council (AEC) standard *Q101 - Stress test qualification for discrete semiconductors*, and is suitable for use in automotive applications.

All information provided in this document is subject to legal disclaimers.

© Nexperia B.V. 2017. All rights reserved

9. Package outline

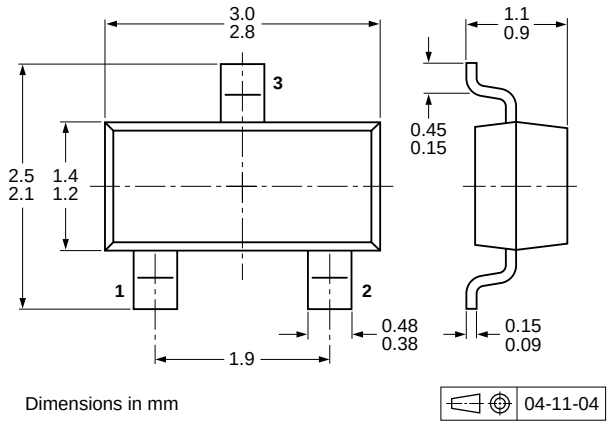

Fig 7. Package outline BAS16 (SOT23/TO-236AB)

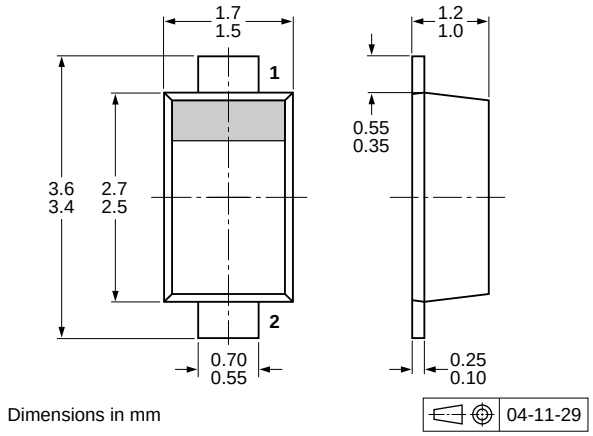

Fig 8. Package outline BAS16H (SOD123F)

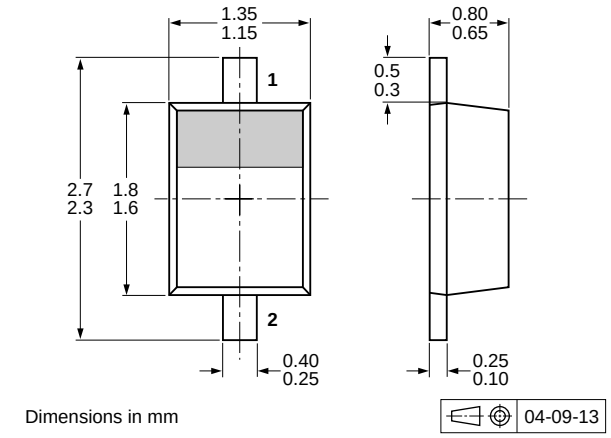

Fig 9. Package outline BAS16J (SOD323F/SC-90)

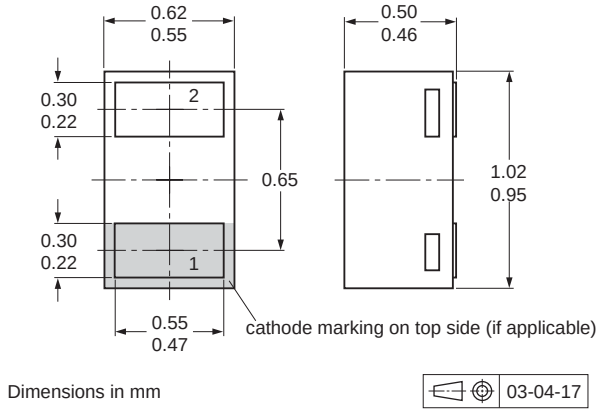

Fig 10. Package outline BAS16L (SOD882/DFN1006-2)

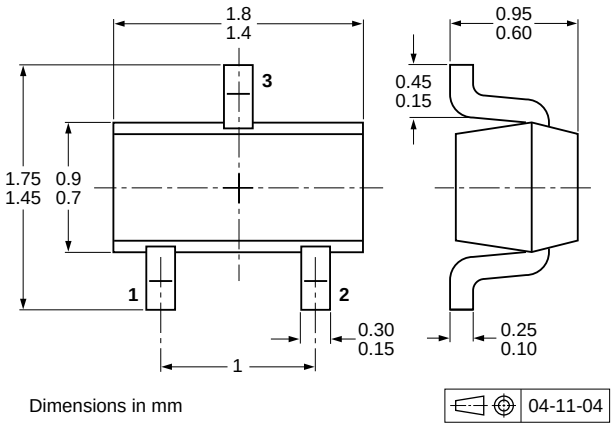

Fig 11. Package outline BAS16T (SOT416/SC-75)

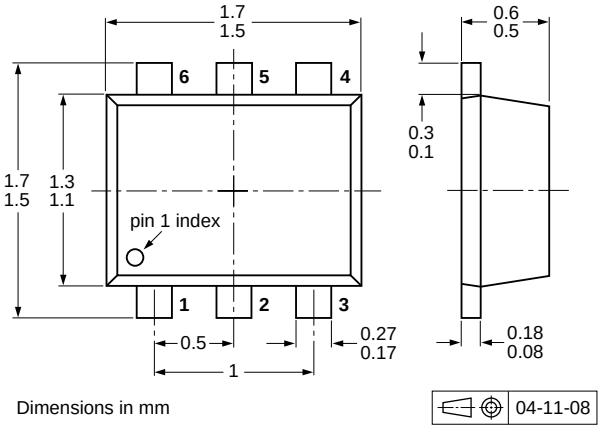

Fig 12. Package outline BAS16VV (SOT666)

All information provided in this document is subject to legal disclaimers.

© Nexperia B.V. 2017. All rights reserved

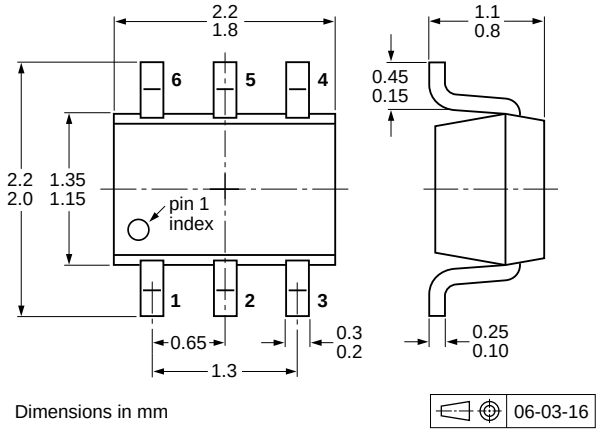

Fig 13. Package outline BAS16VY (SOT363)

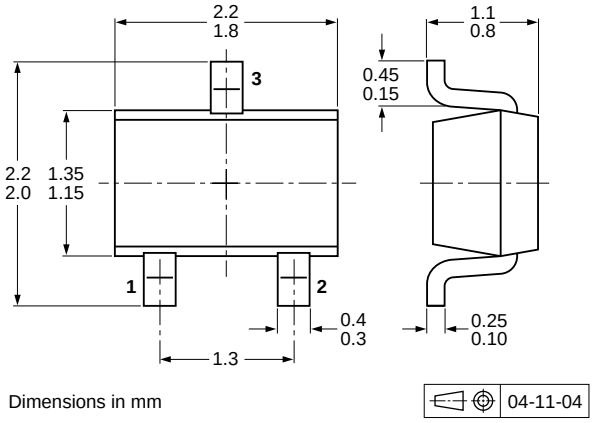

Fig 14. Package outline BAS16W (SOT323/SC-70)

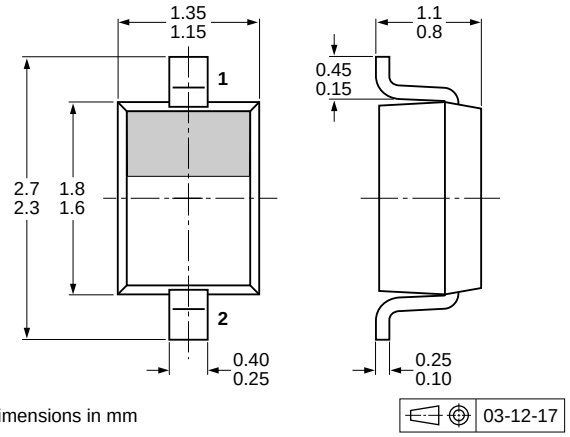

Fig 15. Package outline BAS316 (SOD323/SC-76)

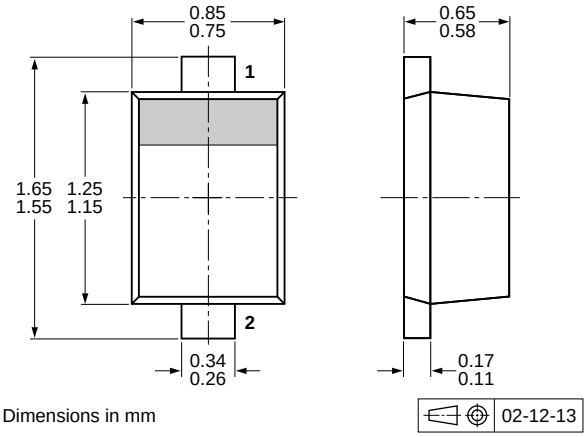

Fig 16. Package outline BAS516 (SOD523/SC-79)

All information provided in this document is subject to legal disclaimers.

© Nexperia B.V. 2017. All rights reserved

10. Soldering

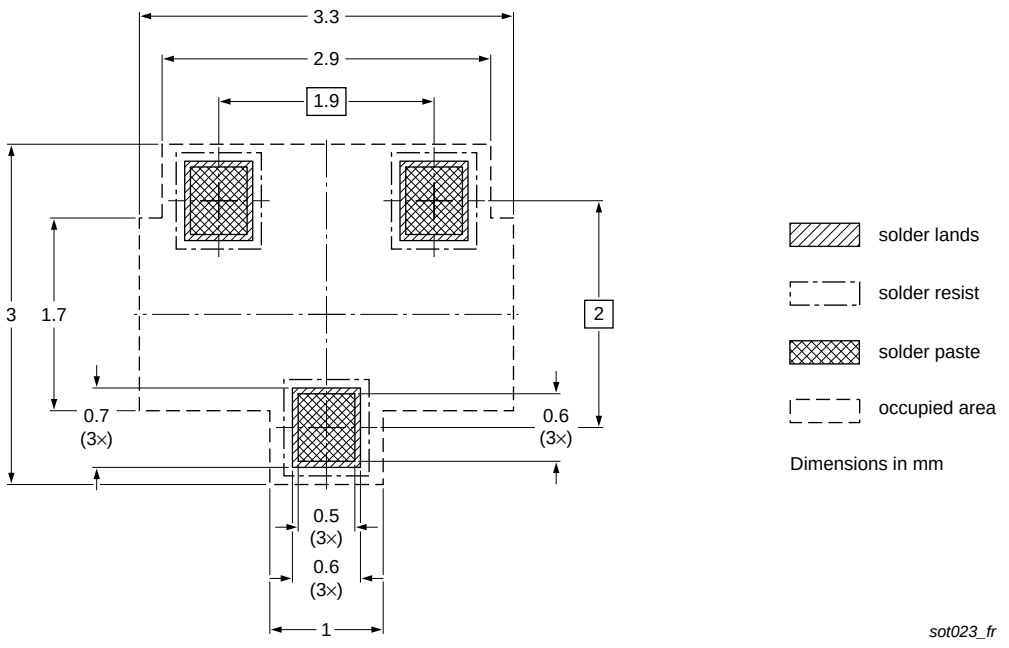

Fig 17. Reflow soldering footprint BAS16 (SOT23/TO-236AB)

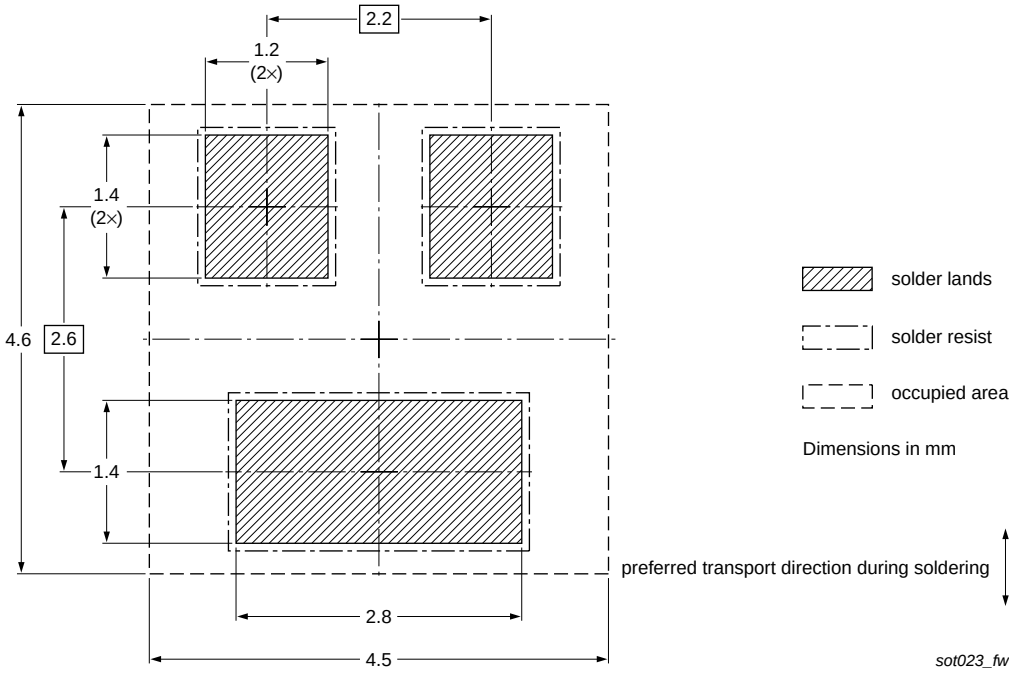

Fig 18. Wave soldering footprint BAS16 (SOT23/TO-236AB)

All information provided in this document is subject to legal disclaimers.

© Nexperia B.V. 2017. All rights reserved

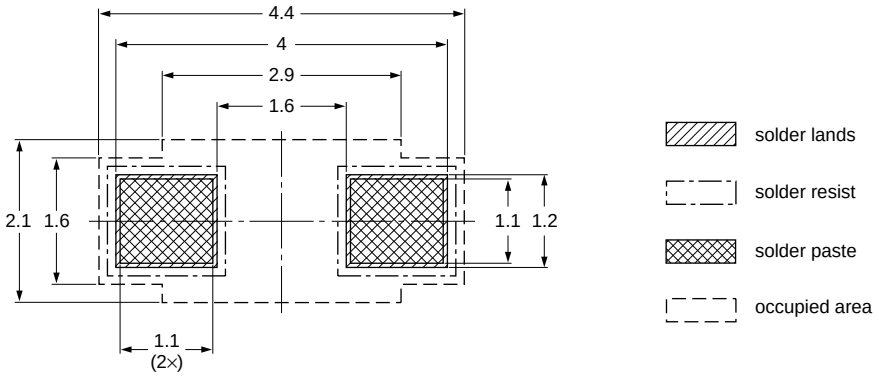

Dimensions in mm

Fig 19. Reflow soldering footprint BAS16H (SOD123F)

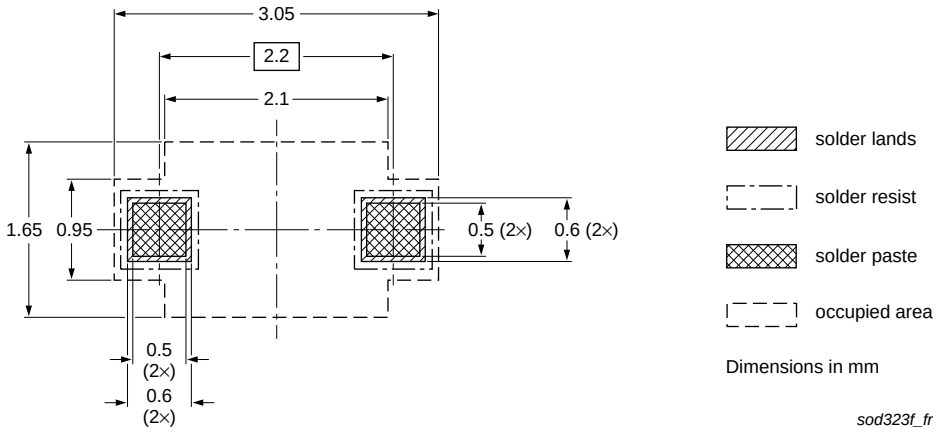

Fig 20. Reflow soldering footprint BAS16J (SOD323F)

All information provided in this document is subject to legal disclaimers.

© Nexperia B.V. 2017. All rights reserved

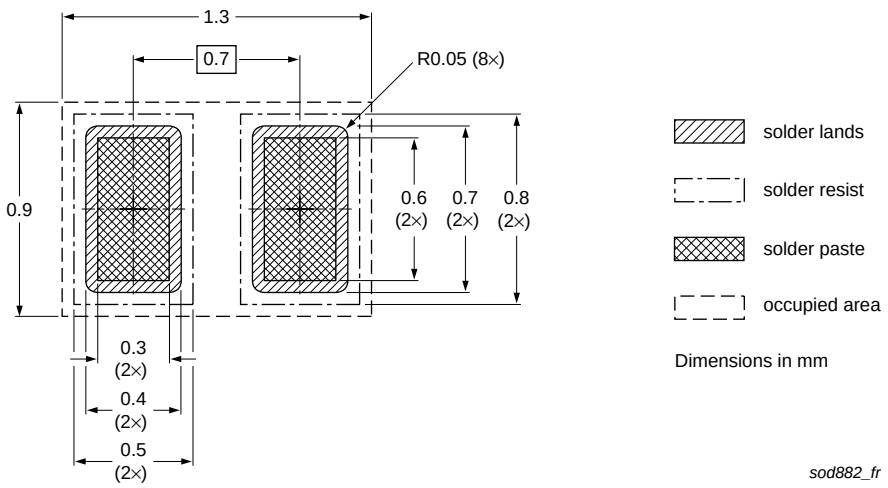

Fig 21. Reflow soldering footprint BAS16L (SOD882/DFN1006-2)

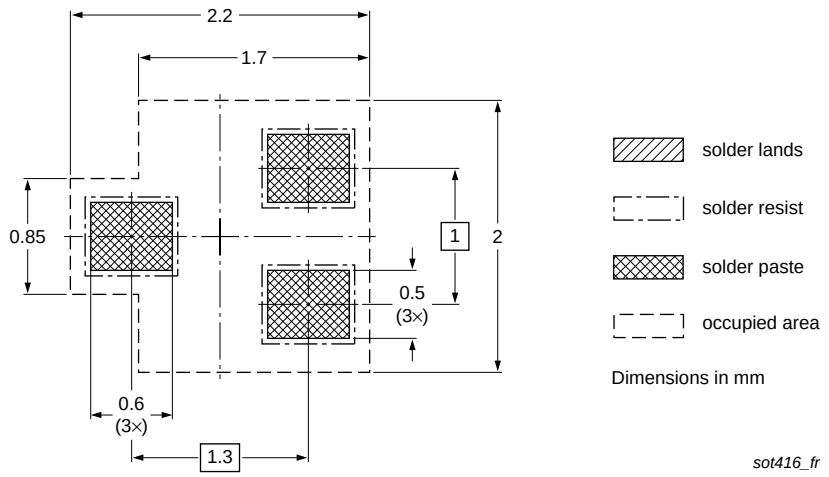

Fig 22. Reflow soldering footprint BAS16T (SOT416/SC-75)

All information provided in this document is subject to legal disclaimers.

© Nexperia B.V. 2017. All rights reserved

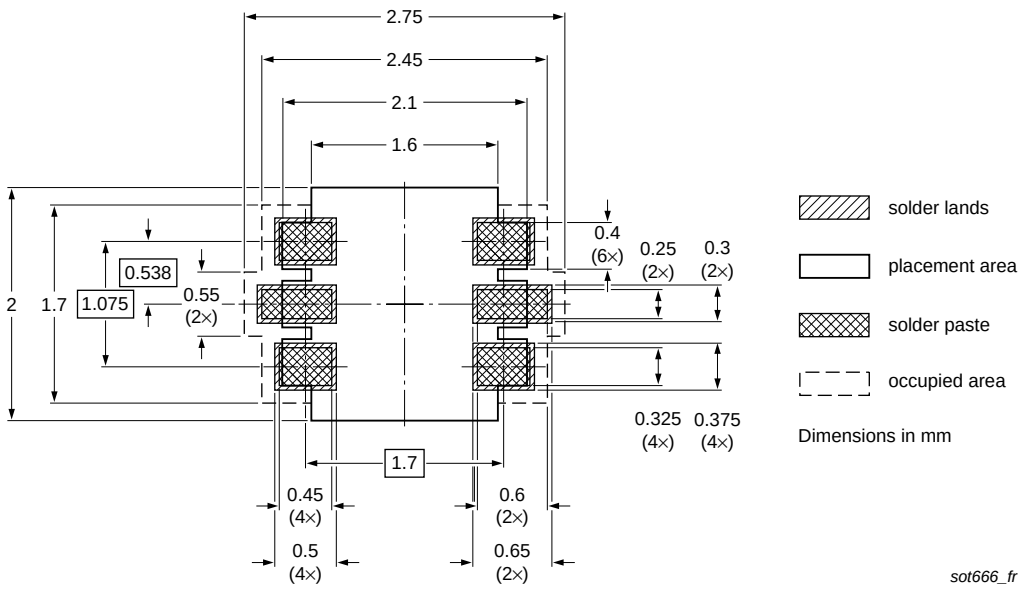

Fig 23. Reflow soldering footprint BAS16VV (SOT666)

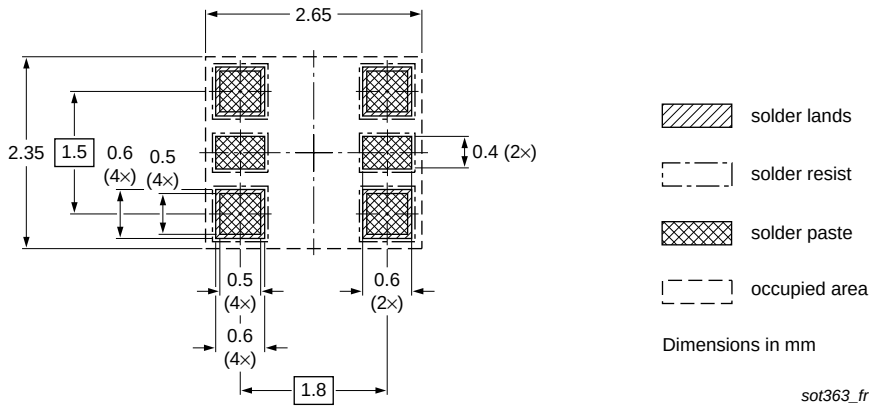

Fig 24. Reflow soldering footprint BAS16VY (SOT363/SC-88)

All information provided in this document is subject to legal disclaimers.

© Nexperia B.V. 2017. All rights reserved

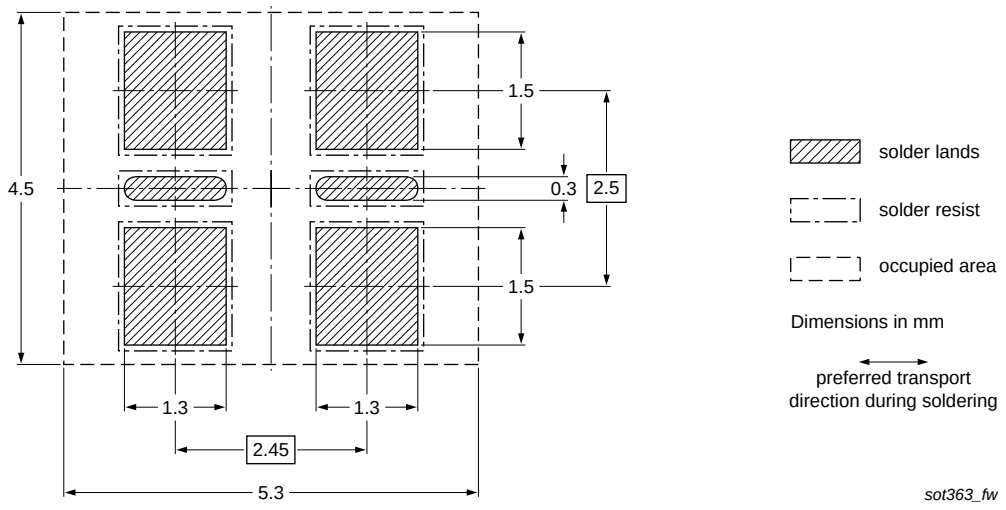

Fig 25. Wave soldering footprint BAS16VY (SOT363/SC-88)

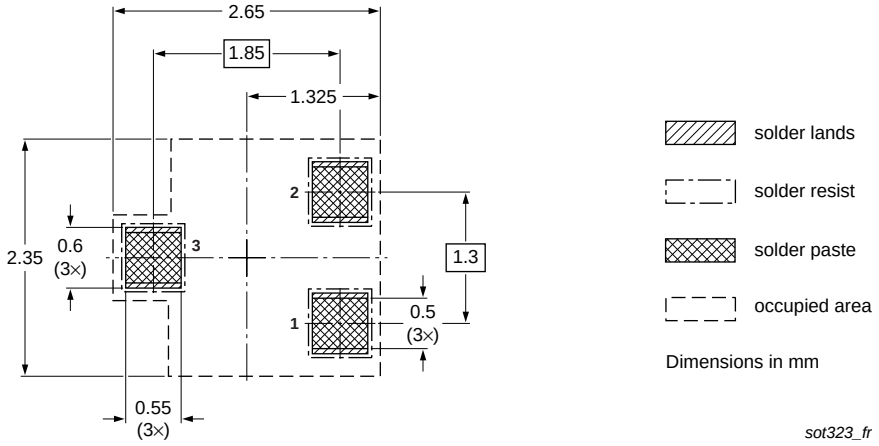

Fig 26. Reflow soldering footprint BAS16W (SOT323/SC-70)

All information provided in this document is subject to legal disclaimers.

© Nexperia B.V. 2017. All rights reserved

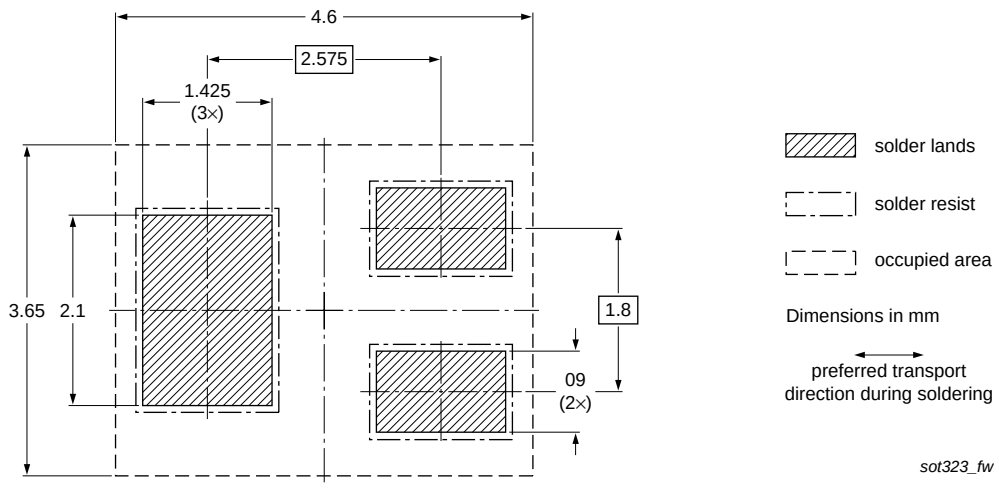

Fig 27. Wave soldering footprint BAS16W (SOT323/SC-70)

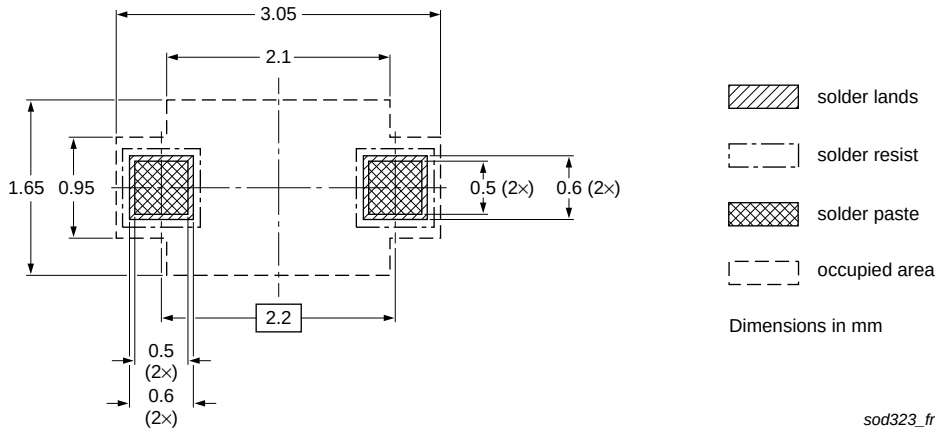

Fig 28. Reflow soldering footprint BAS316 (SOD323/SC-76)

All information provided in this document is subject to legal disclaimers.

© Nexperia B.V. 2017. All rights reserved

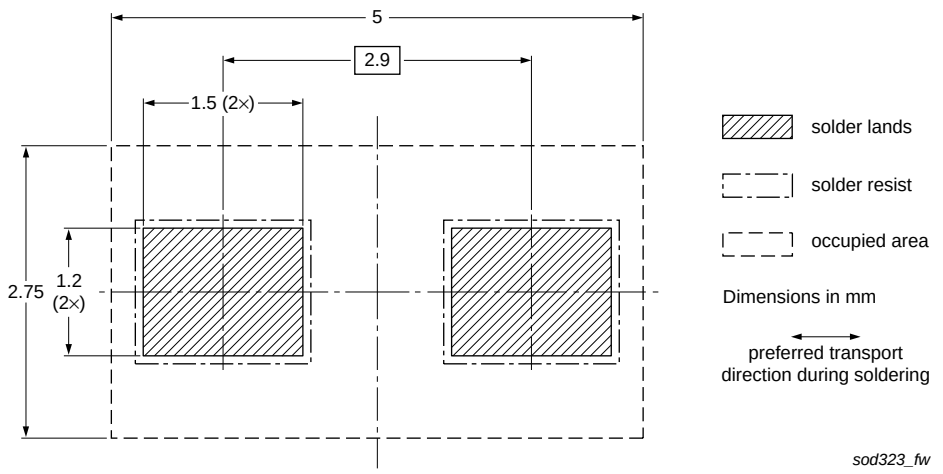

Fig 29. Wave soldering footprint BAS316 (SOD323/SC-76)

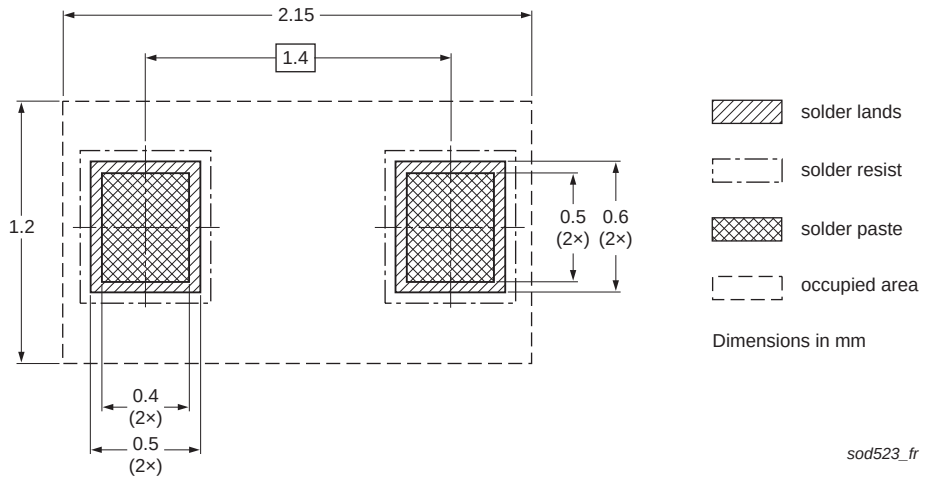

Fig 30. Reflow soldering footprint BAS516 (SOD523/SC-79)

All information provided in this document is subject to legal disclaimers.

© Nexperia B.V. 2017. All rights reserved

11. Revision history

Table 9. Revision history

Document ID	Release date	Data sheet status	Change notice	Supersedes
BAS16_SER_6	20140924	Product data sheet	-	BAS16_SER_5
Modifications:	• Section 1.2 “Features and benefits”: updated • Section 4 “Marking”: updated • Table 6 “Limiting values”: updated • Section 8 “Test information”: updated • Section 12 “Legal information”: updated			
BAS16_SER_5	20080825	Product data sheet	-	BAS16_4 BAS16H_1 BAS16J_1 BAS16L_1 BAS16T_1 BAS16VV_BAS16VY_3 BAS16W_4 BAS316_4 BAS516_1
BAS16_4	20011010	Product specification	-	BAS16_3
BAS16H_1	20050415	Product data sheet	-	-
BAS16J_1	20070308	Product data sheet	-	-
BAS16L_1	20030623	Product specification	-	-
BAS16T_1	19980120	Product specification	-	-
BAS16VV_BAS16VY_3	20070420	Product data sheet	-	BAS16VV_BAS16VY_2
BAS16W_4	19990506	Product specification	-	BAS16W_3
BAS316_4	20040204	Product specification	-	BAS316_3
BAS516_1	19980831	Product specification	-	-

All information provided in this document is subject to legal disclaimers.

© Nexperia B.V. 2017. All rights reserved

12. Legal information

12.1 Data sheet status

Document status[1][2]	Product status[3]	Definition
Objective [short] data sheet	Development	This document contains data from the objective specification for product development.
Preliminary [short] data sheet	Qualification	This document contains data from the preliminary specification.
Product [short] data sheet	Production	This document contains the product specification.

[1] Please consult the most recently issued document before initiating or completing a design.

[2] The term 'short data sheet' is explained in section "Definitions".

[3] The product status of device(s) described in this document may have changed since this document was published and may differ in case of multiple devices. The latest product status information is available on the Internet at URL http://www.nexperia.com.

12.2 Definitions

Draft — The document is a draft version only. The content is still under internal review and subject to formal approval, which may result in modifications or additions. Nexperia does not give any representations or warranties as to the accuracy or completeness of information included herein and shall have no liability for the consequences of use of such information.

Short data sheet — A short data sheet is an extract from a full data sheet with the same product type number(s) and title. A short data sheet is intended for quick reference only and should not be relied upon to contain detailed and full information. For detailed and full information see the relevant full data sheet, which is available on request via the local Nexperia sales office. In case of any inconsistency or conflict with the short data sheet, the full data sheet shall prevail.

Product specification — The information and data provided in a Product data sheet shall define the specification of the product as agreed between Nexperia and its customer, unless Nexperia and customer have explicitly agreed otherwise in writing. In no event however, shall an agreement be valid in which the Nexperia product is deemed to offer functions and qualities beyond those described in the Product data sheet.

12.3 Disclaimers

Limited warranty and liability — Information in this document is believed to be accurate and reliable. However, Nexperia does not give any representations or warranties, expressed or implied, as to the accuracy or completeness of such information and shall have no liability for the consequences of use of such information. Nexperia takes no responsibility for the content in this document if provided by an information source outside of Nexperia.

In no event shall Nexperia be liable for any indirect, incidental, punitive, special or consequential damages (including - without limitation - lost profits, lost savings, business interruption, costs related to the removal or replacement of any products or rework charges) whether or not such damages are based on tort (including negligence), warranty, breach of contract or any other legal theory.

Notwithstanding any damages that customer might incur for any reason whatsoever, Nexperia's aggregate and cumulative liability towards customer for the products described herein shall be limited in accordance with the *Terms and conditions of commercial sale* of Nexperia.

Right to make changes — Nexperia reserves the right to make changes to information published in this document, including without limitation specifications and product descriptions, at any time and without notice. This document supersedes and replaces all information supplied prior to the publication hereof.

Suitability for use in automotive applications — This Nexperia product has been qualified for use in automotive applications. Unless otherwise agreed in writing, the product is not designed, authorized or warranted to be suitable for use in life support, life-critical or safety-critical systems or equipment, nor in applications where failure or malfunction of a Nexperia product can reasonably be expected to result in personal injury, death or severe property or environmental damage. Nexperia and its suppliers accept no liability for inclusion and/or use of Nexperia products in such equipment or applications and therefore such inclusion and/or use is at the customer's own risk.

Applications — Applications that are described herein for any of these products are for illustrative purposes only. Nexperia makes no representation or warranty that such applications will be suitable for the specified use without further testing or modification.

Customers are responsible for the design and operation of their applications and products using Nexperia products, and Nexperia accepts no liability for any assistance with applications or customer product design. It is customer's sole responsibility to determine whether the Nexperia product is suitable and fit for the customer's applications and products planned, as well as for the planned application and use of customer's third party customer(s). Customers should provide appropriate design and operating safeguards to minimize the risks associated with their applications and products.

Nexperia does not accept any liability related to any default, damage, costs or problem which is based on any weakness or default in the customer's applications or products, or the application or use by customer's third party customer(s). Customer is responsible for doing all necessary testing for the customer's applications and products using Nexperia products in order to avoid a default of the applications and the products or of the application or use by customer's third party customer(s). Nexperia does not accept any liability in this respect.

Limiting values — Stress above one or more limiting values (as defined in the Absolute Maximum Ratings System of IEC 60134) will cause permanent damage to the device. Limiting values are stress ratings only and (proper) operation of the device at these or any other conditions above those given in the Recommended operating conditions section (if present) or the Characteristics sections of this document is not warranted. Constant or repeated exposure to limiting values will permanently and irreversibly affect the quality and reliability of the device.

Terms and conditions of commercial sale — Nexperia products are sold subject to the general terms and conditions of commercial sale, as published at http://www.nexperia.com/profile/terms, unless otherwise agreed in a valid written individual agreement. In case an individual agreement is concluded only the terms and conditions of the respective agreement shall apply. Nexperia hereby expressly objects to applying the customer's general terms and conditions with regard to the purchase of Nexperia products by customer.

All information provided in this document is subject to legal disclaimers.

© Nexperia B.V. 2017. All rights reserved

No offer to sell or license — Nothing in this document may be interpreted or construed as an offer to sell products that is open for acceptance or the grant, conveyance or implication of any license under any copyrights, patents or other industrial or intellectual property rights.

Export control — This document as well as the item(s) described herein may be subject to export control regulations. Export might require a prior authorization from competent authorities.

Quick reference data — The Quick reference data is an extract of the product data given in the Limiting values and Characteristics sections of this document, and as such is not complete, exhaustive or legally binding.

Translations — A non-English (translated) version of a document is for reference only. The English version shall prevail in case of any discrepancy between the translated and English versions.

12.4 Trademarks

Notice: All referenced brands, product names, service names and trademarks are the property of their respective owners.

13. Contact information

For more information, please visit: **http://www.nexperia.com**

For sales office addresses, please send an email to: **salesaddresses@nexperia.com**

All information provided in this document is subject to legal disclaimers.

© Nexperia B.V. 2017. All rights reserved

14. Contents

1 Product profile 1
1.1 General description 1
1.2 Features and benefits 1
1.3 Applications 1
1.4 Quick reference data 2
2 Pinning information 2
3 Ordering information 3
4 Marking 3
5 Limiting values 3
6 Thermal characteristics 5
7 Characteristics 6
8 Test information 8
8.1 Quality information 8
9 Package outline 9
10 Soldering 11
11 Revision history 18
12 Legal information 19
12.1 Data sheet status 19
12.2 Definitions 19
12.3 Disclaimers 19
12.4 Trademarks 20
13 Contact information 20
14 Contents 21

© Nexperia B.V. 2017. All rights reserved

For more information, please visit: http://www.nexperia.com
For sales office addresses, please send an email to: salesaddresses@nexperia.com
Date of release: 24 September 2014