NOTES:

1. MATERIALS AND FINISHES:

   SMA STR PLUG - STAINLESS STEEL, GOLD PLATING
   CABLE - 0.141 CONFORMABLE

2. ELECTRICAL:

   A. IMPEDANCE: 50 OHM

3. PACKAGING:

   A. QUANTITY: SINGLE PACK
   B. MARKING: BAG TO BE MARKED
      "AMPHENOL RF, 95-902-450-XXX AND DATE CODE".

THIRD ANGLE PROJ.

REVISIONS

REV	DESCRIPTION	DATE	ECO	APPR
A	RELEASE TO MFG	11/16/15	50824	VK
B	ADDED PNS FOR 3, 4, AND 5 IN LENGTHS	12/18/15	50911	JN

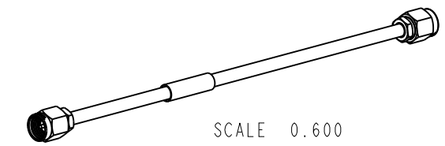

SCALE 0.600

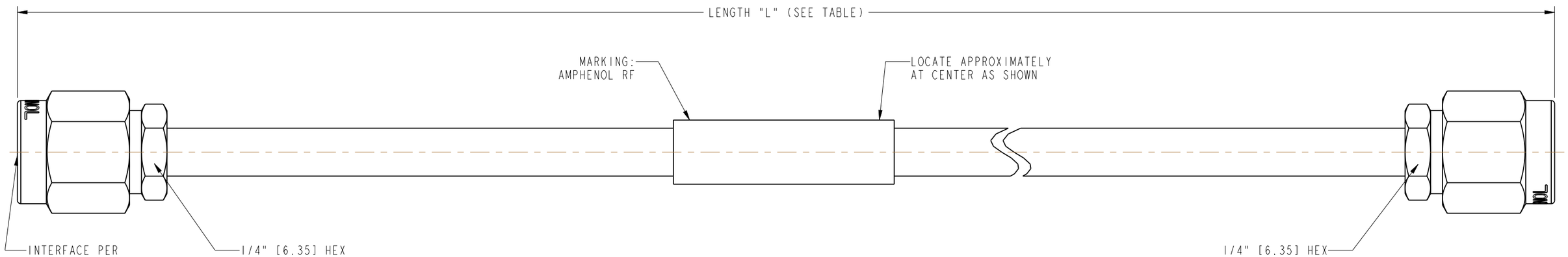

LENGTH TABLE

PART NUMBER (IMPERIAL)	PART NUMBER (METRIC)	LENGTH "L" IN INCHES [METERS]	INSERTION LOSS MAX (dB)
95-902-450-003	-	3.00 [0.076]	0.30
95-902-450-004	-	4.00 [0.102]	0.35
95-902-450-005	-	5.00 [0.127]	0.40
95-902-450-006	-	6.00 [0.152]	0.45
95-902-450-007	-	7.00 [0.178]	0.50
95-902-450-008	-	8.00 [0.203]	0.55
95-902-450-009	-	9.00 [0.229]	0.60
-	95-902-450M025	9.84 [0.250]	0.65
95-902-450-010	-	10.00 [0.254]	0.70
95-902-450-012	-	12.00 [0.305]	0.80
95-902-450-018	-	18.00 [0.457]	1.15
-	95-902-450M050	19.69 [0.500]	1.20
95-902-450-024	-	24.00 [0.610]	1.45
95-902-450-036	-	36.00 [0.914]	2.15
-	95-902-450M100	39.37 [1.000]	2.30

DESIGN REQUIREMENTS:

- [X] FREQUENCY : DC TO 18 GHz
- [X] VSWR : 1.650 MAX.
- [X] INS. LOSS : SEE TABLE
- [X] CONTINUITY
- [X] HI-POT: 500 VRMS
- [ ] OTHER

CUSTOMER OUTLINE DRAWING

ALL OTHER SHEETS ARE FOR INTERNAL USE ONLY

UNLESS OTHERWISE SPECIFIED, DIMENSIONS ARE IN INCHES AND TOLERANCES ARE:
2 PLACE DECIMAL ±.015 (0,381 mm) | 3 PLACE DECIMAL ±.005 (0,127 mm) | ANGLES ± 1°

NOTICE - These drawings, specifications, or other data (1) are, and remain the property of Amphenol corp. (2) must be returned upon request; and (3) are confidential and not to be disclosed to any person other than those to whom they are given by Amphenol Corp. the furnishing of these drawings, specifications, or other data by Amphenol Corp., or to any other person to anyone for any purpose is not to be regarded by implication or otherwise in any manner licensing, granting rights to permitting such holder or any other person to manufacture, use or sell any product, process or design, patented or otherwise, that may in any way be related to or disclosed by said drawings, specifications, or other data.

MATERIAL: SEE NOTES

REFERENCE: EAR # 6826

CONFIGURATION LEVEL: In Work

FINISH

DRAWN: J. NERI — DATE: 02-Dec-15

ENGINEER: CLEMENT — DATE: 15-Oct-15

APPROVED: K. CAPOZZI — DATE: 12/18/15

CAD FILE

TITLE: SMA STR PLUG TO SMA STR PLUG, WITH ANTI-TORQUE BODY USING 0.141 CONFORMABLE CABLE, VARIOUS LENGTHS

SCALE: 3.5:1.0 | SHEET 2 OF 2

DWG SIZE: B | REV: B

Amphenol RF
www.amphenolrf.com

DRAWING NO. 95-902-450-XXX

ITEM NO. 95-902-450-XXX

PART NO. 95-902-450-XXX